HAMMOND

Quality Products. Service Excellence.

Toroidal L.V. - Chassis Mount - 15 VA to 1500 VA *182 Series*

Note: This product line will soon be discontinued as a stocked series. Available while quantities last. It has been replaced with **1182 Series**. For alternative solution assistance, please **contact Hammond here** or call: USA (716) 630-7030, Canada and International (519) 822-2960.



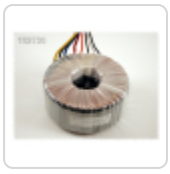



Features

- Low profile, lightweight, cool running - due to high efficiency toroidal design
- Dual 117/234 VAC primary, 50/60 Hz. operation
- Units are designed to have all windings engaged.
- Center single hole mounting - units over 225VA include a potted center (see photos below) for extra mounting strength.
- Supplied with two rubber insulating pads, one metal centering washer and all mounting hardware (160VA and under)
- Supplied with one bottom rubber insulating pad and mounting hardware (225VA and larger)
- Center bolt size varies with VA - see tables below.
- Minimum 8" long flexible leads
- Hi-Pot test of 4,000V RMS between primary & secondary
- CSA certified to C22.2 #66 - CSA file #209651
- UL recognized to UL506 - UL file #E207860
- CE certified to IEC950
- **Note about Inrush Current:**
- Due to the superior magnetic properties of Toroidal transformers they will be susceptible to high magnetizing current when initially energized, only limited by the low DC resistance of the primary winding. Depending on where you are in the AC cycle when the transformer is energized dictates the chances of overloading the supply circuit. This is why the transformer may sometimes energize without a problem and other times it will blow the fuse or trip the circuit breaker. The duration of this overload is rarely longer than a half of a cycle. Therefore, you should consider using a slow-blow fuse, time delayed circuit breaker or other form of soft start circuitry for the supply line when using these high efficient Toroidal transformers.

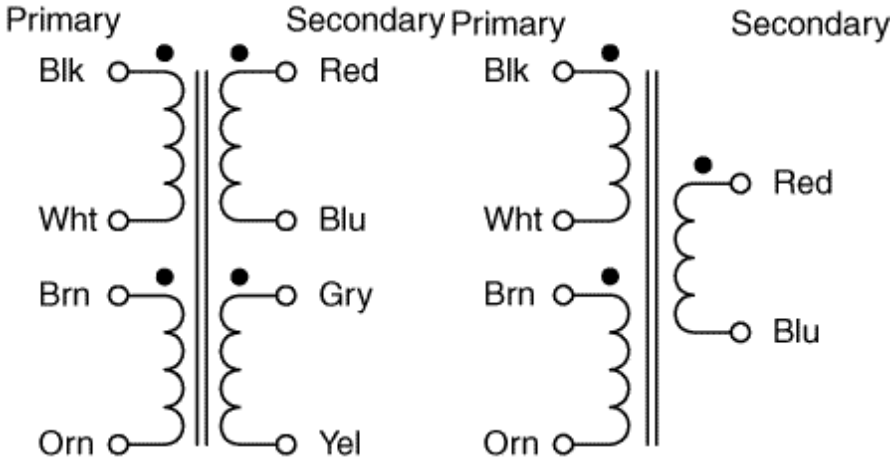

Part No.	VA	VAC Secondary (RMS) Series	VAC Secondary (RMS) Parallel	Dual or Single Secondary	Toroid Center	Outside Diameter	Height	Potted	Included Mounting Hardware Size Thread	Included Mounting Hardware Size Length	Top Steel Mounting Washer with Top & Bottom Rubber Washer	Weight (lbs.)
182K6	15	12V C.T. @ 1.25A	6V @ 2.5A	Dual	Open	2.70	1.25	No	8-32	1.50	Yes	0.76
182L6	30	12V C.T. @ 2.5A	6V @ 5A	Dual	Open	2.95	1.60	No	10-24	2.00	Yes	1.12
182N6	50	12V C.T. @ 4.17A	6V @ 8.34A	Dual	Open	3.63	1.73	No	10-24	2.00	Yes	1.67
182Q6	80	12V C.T. @ 6.67A	6V @ 13.34A	Dual	Open	3.73	1.52	No	10-24	2.00	Yes	2.15
182H9	15	18V C.T. @ .83A	9V @ 1.66A	Dual	Open	2.70	1.25	No	8-32	1.50	Yes	0.76
182K9	30	18V C.T. @ 1.67A	9V @ 3.34A	Dual	Open	2.95	1.60	No	10-24	2.00	Yes	1.12
182M9	50	18V C.T. @ 2.78A	9V @ 5.56A	Dual	Open	3.63	1.73	No	10-24	2.00	Yes	1.67
182N9	80	18V C.T. @ 4.44A	9V @ 8.88A	Dual	Open	3.73	1.52	No	10-24	2.00	Yes	2.15
182Q9	120	18V C.T. @ 6.67A	9V @ 13.34A	Dual	Open	3.98	1.68	No	10-24	2.00	Yes	2.84
182G12	15	24V C.T. @ .63A	12V @ 1.26A	Dual	Open	2.70	1.25	No	8-32	1.50	Yes	0.76
182K12	30	24V C.T. @ 1.25A	12V @ 2.5A	Dual	Open	2.95	1.60	No	10-24	2.00	Yes	1.12
182L12	50	24V C.T. @ 2.08A	12V @ 4.16A	Dual	Open	3.63	1.73	No	10-24	2.00	Yes	1.67
182M12	80	24V C.T. @ 3.33A	12V @ 6.66A	Dual	Open	3.73	1.52	No	10-24	2.00	Yes	2.15
182P12	120	24V C.T. @ 5A	12V @ 10A	Dual	Open	3.98	1.68	No	10-24	2.00	Yes	2.84
182Q12	160	24V C.T. @ 6.67A	12V @ 13.34A	Dual	Open	4.43	1.73	No	1/4-20	2.50	Yes	3.87
182S12	225	24V C.T. @ 9.38A	12V @ 18.76A	Dual	Potted	4.97	1.90	Yes	1/4-20	2.50	Bottom Rubber Washer Only	4.96
182T12	300	24V C.T. @ 12.5A	12V @ 25A	Dual	Potted	5.06	2.27	Yes	1/4-20	2.50	Bottom Rubber Washer Only	5.58
182G15	15	30V C.T. @ .5A	15V @ 1A	Dual	Open	2.70	1.25	No	8-32	1.50	Yes	0.76
182J15	30	30V C.T. @ 1A	15V @ 2A	Dual	Open	2.95	1.60	No	10-24	2.00	Yes	1.12
182K15	50	30V C.T. @ 1.67A	15V @ 3.34A	Dual	Open	3.63	1.73	No	10-24	2.00	Yes	1.67
182M15	80	30V C.T. @ 2.67A	15V @ 5.34A	Dual	Open	3.73	1.52	No	10-24	2.00	Yes	2.15
182N15	120	30V C.T. @ 4A	15V @ 8A	Dual	Open	3.98	1.68	No	10-24	2.00	Yes	2.84
182P15	160	30V C.T. @ 5.33A	15V @ 10.66A	Dual	Open	4.43	1.73	No	1/4-20	2.50	Yes	3.87
182H15	225	30V C.T. @ 7.5A	15V @ 15A	Dual	Potted	4.97	1.90	Yes	1/4-20	2.50	Bottom Rubber Washer Only	4.96
182S15	300	30V C.T. @ 10A	15V @ 20A	Dual	Potted	5.06	2.27	Yes	1/4-20	2.50	Bottom Rubber Washer Only	5.58
182F18	15	36V C.T. @ .42A	18V @ .84A	Dual	Open	2.70	1.25	No	8-32	1.50	Yes	0.76
182H18	30	36V C.T. @ .83A	18V @ 1.66A	Dual	Open	2.95	1.60	No	10-24	2.00	Yes	1.12
182J18	50	36V C.T. @ 1.39A	18V @ 2.78A	Dual	Open	3.63	1.73	No	10-24	2.00	Yes	1.67
182L18	80	36V C.T. @ 2.22A	18V @ 4.44A	Dual	Open	3.73	1.52	No	10-24	2.00	Yes	2.15
182M18	120	36V C.T. @ 3.33A	18V @ 6.66A	Dual	Open	3.98	1.68	No	10-24	2.00	Yes	2.84
182N18	160	36V C.T. @ 4.44A	18V @ 8.88A	Dual	Open	4.43	1.73	No	1/4-20	2.50	Yes	3.87
182G18	225	36V C.T. @ 6.25A	18V @ 12.5A	Dual	Potted	4.97	1.90	Yes	1/4-20	2.50	Bottom Rubber Washer Only	4.96
182F22	15	44V C.T. @ .34A	22V @ .68A	Dual	Open	2.70	1.25	No	8-32	1.50	Yes	0.76
182G22	30	44V C.T. @ .68A	22V @ 1.36A	Dual	Open	2.95	1.60	No	10-24	2.00	Yes	1.12
182J22	50	44V C.T. @ 1.14A	22V @ 2.28A	Dual	Open	3.63	1.73	No	10-24	2.00	Yes	1.67
182L22	80	44V C.T. @ 1.82A	22V @ 3.64A	Dual	Open	3.73	1.52	No	10-24	2.00	Yes	2.15
182M22	120	44V C.T. @ 2.73A	22V @ 5.46A	Dual	Open	3.98	1.68	No	10-24	2.00	Yes	2.84
182N22	160	44V C.T. @ 3.64A	22V @ 7.28A	Dual	Open	4.43	1.73	No	1/4-20	2.50	Yes	3.87
182P22	225	44V C.T. @ 5.11A	22V @ 10.22A	Dual	Potted	4.97	1.90	Yes	1/4-20	2.50	Bottom Rubber Washer Only	4.96
182S24	500	48V C.T. @ 10.42A	24V @ 20.82A	Dual	Potted	5.50	2.21	Yes	1/4-20	2.50	Bottom Rubber Washer Only	8.46

Part No.	VA	VAC Secondary (RMS) Series	VAC Secondary (RMS) Parallel	Dual or Single Secondary	Toroid Center	Outside Diameter	Height	Potted	Included Mounting Hardware Size Thread	Included Mounting Hardware Size Length	Top Steel Mounting Washer with Top & Bottom Rubber Washer	Weight (lbs.)
182T24	625	48V C.T. @ 13.02A	24V @ 26.04A	Dual	Potted	6.10	3.10	Yes	3/8-16	3.50	Bottom Rubber Washer Only	10.38
182U24	750	48V C.T. @ 15.63A	24V @ 31.26A	Dual	Potted	6.40	3.10	Yes	3/8-16	3.50	Bottom Rubber Washer Only	13.53
182V24	1000	48V C.T. @ 20.8A	24V @ 41.7A	Dual	Potted	6.50	3.50	Yes	3/8-16	3.50	Bottom Rubber Washer Only	16.49
182K30	80	60V C.T. @ 1.33A	30V @ 2.66A	Dual	Open	3.73	1.52	No	10-24	2.00	Yes	2.15
182L30	120	60V C.T. @ 2A	30V @ 4A	Dual	Open	3.98	1.68	No	10-24	2.00	Yes	2.84
182M30	160	60V C.T. @ 2.67A	30V @ 5.34A	Dual	Open	4.43	1.73	No	1/4-20	2.50	Yes	3.87
182F30	225	60V C.T. @ 3.75A	30V @ 7.5A	Dual	Potted	4.97	1.90	Yes	1/4-20	2.50	Bottom Rubber Washer Only	4.96
182P30	300	60V C.T. @ 5A	30V @ 10A	Dual	Potted	5.06	2.27	Yes	1/4-20	2.50	Bottom Rubber Washer Only	5.58
182R30	500	60V C.T. @ 8.33A	30V @ 16.66A	Dual	Potted	5.50	2.21	Yes	1/4-20	2.50	Bottom Rubber Washer Only	8.46
182S30	625	60V C.T. @ 10.42A	30V @ 20.84A	Dual	Potted	6.10	3.10	Yes	3/8-16	3.50	Bottom Rubber Washer Only	10.38
182T30	750	60V C.T. @ 12.5A	30V @ 25A	Dual	Potted	6.40	3.10	Yes	3/8-16	3.50	Bottom Rubber Washer Only	13.53
182U30	1000	60V C.T. @ 16.7A	30V @ 33.3A	Dual	Potted	6.50	3.50	Yes	3/8-16	3.50	Bottom Rubber Washer Only	16.49
182V40	1500	80V C.T. @ 18.8A	40V @ 37.5A	Dual	Potted	7.20	3.50	Yes	3/8-16	3.50	Bottom Rubber Washer Only	24.97
182L60	300	120V C.T. @ 2.5A	60V @ 5A	Dual	Potted	5.06	2.27	Yes	1/4-20	2.50	Bottom Rubber Washer Only	5.58
182N60	500	120V C.T. @ 4.17A	60V @ 8.34A	Dual	Potted	5.50	2.21	Yes	1/4-20	2.50	Bottom Rubber Washer Only	8.46
182P60	625	120V C.T. @ 5.21A	60V @ 10.42A	Dual	Potted	6.10	3.10	Yes	3/8-16	3.50	Bottom Rubber Washer Only	10.38
182Q60	750	120V C.T. @ 6.25A	60V @ 12.5A	Dual	Potted	6.40	3.10	Yes	3/8-16	3.50	Bottom Rubber Washer Only	13.53
182R60	1000	120V C.T. @ 8.3A	60V @ 16.7A	Dual	Potted	6.50	3.50	Yes	3/8-16	3.50	Bottom Rubber Washer Only	16.49
182T60	1500	120V C.T. @ 12.5A	60V @ 25A	Dual	Potted	7.20	3.50	Yes	3/8-16	3.50	Bottom Rubber Washer Only	24.97
182D110	15	220V C.T. @ 68ma	110V @ 136ma	Dual	Open	2.70	1.25	No	8-32	1.50	Yes	0.76
182E110	30	220V C.T. @ 136ma	110V @ 272ma	Dual	Open	2.95	1.60	No	10-24	2.00	Yes	1.12
182G110	50	220V C.T. @ 227ma	110V @ 454ma	Dual	Open	3.63	1.73	No	10-24	2.00	Yes	1.67
182H110	80	220V C.T. @ 364ma	110V @ 728ma	Dual	Open	3.73	1.52	No	10-24	2.00	Yes	2.15
182J110	120	220V C.T. @ 545ma	110V @ 1.09A	Dual	Open	3.98	1.68	No	10-24	2.00	Yes	2.84
182K110	160	220V C.T. @ 727ma	110V @ 1.45A	Dual	Open	4.43	1.73	No	1/4-20	2.50	Yes	3.87
182L110	225	220V C.T. @ 1.02A	110V @ 2.04A	Dual	Potted	4.97	1.90	Yes	1/4-20	2.50	Bottom Rubber Washer Only	4.96
182M110	300	220V C.T. @ 1.36A	110V @ 2.72A	Dual	Potted	5.06	2.27	Yes	1/4-20	2.50	Bottom Rubber Washer Only	5.58
182P110	500	220V C.T. @ 2.27A	110V @ 4.54A	Dual	Potted	5.50	2.21	Yes	1/4-20	2.50	Bottom Rubber Washer Only	8.46
182Q110	625	220V C.T. @ 2.84A	110V @ 5.68A	Dual	Potted	6.10	3.10	Yes	3/8-16	3.50	Bottom Rubber Washer Only	10.38
182R110	750	220V C.T. @ 3.41A	110V @ 6.82A	Dual	Potted	6.40	3.10	Yes	3/8-16	3.50	Bottom Rubber Washer Only	13.53
182S110	1000	220V C.T. @ 4.5A	110V @ 9.1A	Dual	Potted	6.50	3.50	Yes	3/8-16	3.50	Bottom Rubber Washer Only	16.49
182U110	1500	220V C.T. @ 6.8A	110V @ 13.6A	Dual	Potted	7.20	3.50	Yes	3/8-16	3.50	Bottom Rubber Washer Only	24.97
182D117	15	234V C.T. @ 64ma	117V @ 128ma	Dual	Open	2.70	1.25	No	8-32	1.50	Yes	0.76
182E117	30	234V C.T. @ 128ma	117V @ 256ma	Dual	Open	2.95	1.60	No	10-24	2.00	Yes	1.12
182G117	50	234V C.T. @ 214ma	117V @ 428ma	Dual	Open	3.63	1.73	No	10-24	2.00	Yes	1.67
182H117	80	234V C.T. @ 342ma	117V @ 684ma	Dual	Open	3.73	1.52	No	10-24	2.00	Yes	2.15
182J117	120	234V C.T. @ 513ma	117V @ 1.02A	Dual	Open	3.98	1.68	No	10-24	2.00	Yes	2.84
182K117	160	234V C.T. @ 684ma	117V @ 1.37A	Dual	Open	4.43	1.73	No	1/4-20	2.50	Yes	3.87
182L117	225	234V C.T. @ .96A	117V @ 1.92A	Dual	Potted	4.97	1.90	Yes	1/4-20	2.50	Bottom Rubber Washer Only	4.96
182M117	300	234V C.T. @ 1.28A	117V @ 2.56A	Dual	Potted	5.06	2.27	Yes	1/4-20	2.50	Bottom Rubber Washer Only	5.58
182N117	500	234V C.T. @ 2.14A	117V @ 4.28A	Dual	Potted	5.50	2.21	Yes	1/4-20	2.50	Bottom Rubber Washer Only	8.46
182P117	625	234V C.T. @ 2.67A	117V @ 5.34A	Dual	Potted	6.10	3.10	Yes	3/8-16	3.50	Bottom Rubber Washer Only	10.38
182Q117	750	234V C.T. @ 3.21A	117V @ 6.42A	Dual	Potted	6.40	3.10	Yes	3/8-16	3.50	Bottom Rubber Washer Only	13.53
182R117	1000	234V C.T. @ 4.3A	117V @ 8.5A	Dual	Potted	6.50	3.50	Yes	3/8-16	3.50	Bottom Rubber Washer Only	16.49
182T117	1500	234V C.T. @ 6.4A	117V @ 12.8A	Dual	Potted	7.20	3.50	Yes	3/8-16	3.50	Bottom Rubber Washer Only	24.97
182B240	15	-	240V @ 63ma	Single	Open	2.70	1.25	No	8-32	1.50	Yes	0.76
182D240	30	-	240V @ 125ma	Single	Open	2.95	1.60	No	10-24	2.00	Yes	1.12
182E240	50	-	240V @ 208ma	Single	Open	3.63	1.73	No	10-24	2.00	Yes	1.67
182F240	80	-	240V @ 333ma	Single	Open	3.73	1.52	No	10-24	2.00	Yes	2.15
182G240	120	-	240V @ .5A	Single	Open	3.98	1.68	No	10-24	2.00	Yes	2.84
182H240	160	-	240V @ 667ma	Single	Open	4.43	1.73	No	1/4-20	2.50	Yes	3.87
182J240	225	-	240V @ .94A	Single	Potted	4.97	1.90	Yes	1/4-20	2.50	Bottom Rubber Washer Only	4.96
182K240	300	-	240V @ 1.25A	Single	Potted	5.06	2.27	Yes	1/4-20	2.50	Bottom Rubber Washer Only	5.58
182L240	500	-	240V @ 2.08A	Single	Potted	5.50	2.21	Yes	1/4-20	2.50	Bottom Rubber Washer Only	8.46

Part No.	VA	VAC Secondary (RMS) Series	VAC Secondary (RMS) Parallel	Dual or Single Secondary	Toroid Center	Outside Diameter	Height	Potted Center	Included Mounting Hardware Size Thread	Included Mounting Hardware Size Length	Top Steel Mounting Washer with Top & Bottom Rubber Washer	Weight (lbs.)
182M240	625	-	240V @ 2.6A	Single	Potted	6.10	3.10	Yes	3/8-16	3.50	Bottom Rubber Washer Only	10.38
182N240	750	-	240V @ 3.13A	Single	Potted	6.40	3.10	Yes	3/8-16	3.50	Bottom Rubber Washer Only	13.53
182P240	1000	-	240V @ 4.17A	Single	Potted	6.50	3.50	Yes	3/8-16	3.50	Bottom Rubber Washer Only	16.49
182Q240	1500	-	240V @ 6.3A	Single	Potted	7.20	3.50	Yes	3/8-16	3.50	Bottom Rubber Washer Only	24.97

Data subject to change without notice

© 2025. Hammond Manufacturing Ltd. All rights reserved.