HAMMOND

Quality Products. Service Excellence.

Low Voltage Solder or Quick Connect Terminals - 2.4 VA to 102 VA

186-187 Series

Chassis Mount - 115 & 115/230 V Primary





Features

- Choice of two primaries: Single Primary 115VAC (187 series) or Dual Primary 115/230VAC (186 series).
- Either series operates on 50/60 Hz.
- Combination solder or quick connect terminals.
- Split bobbin construction eliminates the need for an electrostatic shield.
- Hi-pot tested to 2 KV RMS.
- Economical open style, channel frame - chassis mount design
- Insulation material - Class B or 130 C
- Lower temperature rise designed not to exceed Class A for longer life.
- UL listed (# E207860) Type 3AH
- CSA Certified

A wiring diagram for this series can be downloaded here.

Gallery





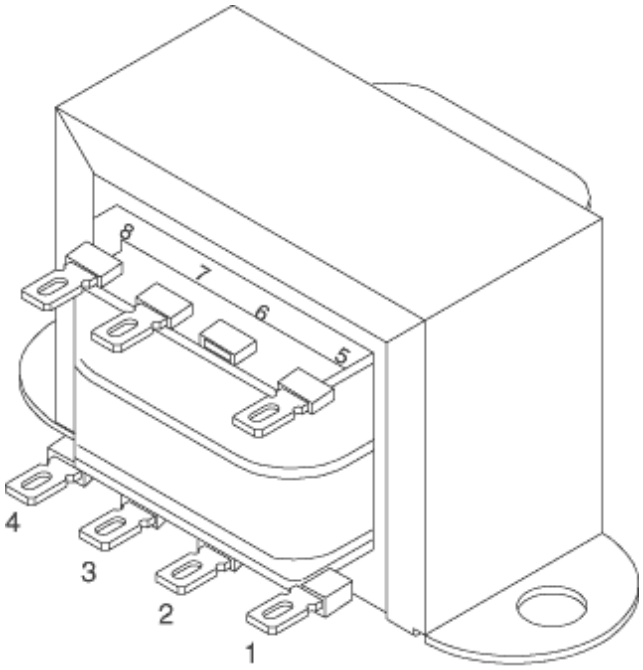

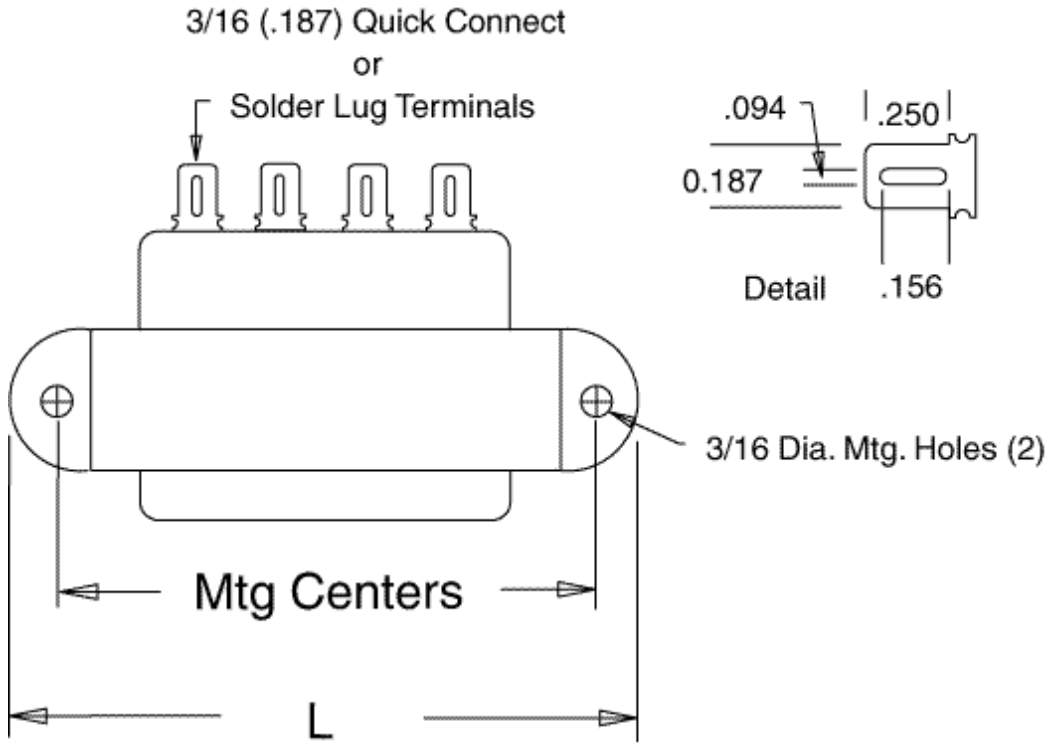

Part No. Single Primary 115 VAC	Part No. Dual Primary 115/230 VAC	Secondary (R.M.S.) VAC	Current (Amps)	VA Rating	Dimensions Length L	Depth (Not Including Terminals) B	Height C	Mounting Centers D	Depth To Terminal E
187A10	-	10V C.T.	0.25	2.5	2.06	1.06	1.18	1.75	1.44
187B10	**186B10**	10V C.T.	0.6	6	2.37	1.25	1.37	2.00	1.62
187C10	**186C10**	10V C.T.	1.2	12	2.81	1.37	1.62	2.37	1.73
187D10	**186D10**	10V C.T.	3	30	3.25	1.68	1.93	2.81	2.06
187E10	**186E10**	10V C.T.	5	50	3.68	1.81	2.25	3.12	2.19
187F10	**186F10**	10V C.T.	10	100	4.03	2.25	2.56	3.50	2.62
187A12	-	12.6V C.T.	0.19	2.5	2.06	1.06	1.18	1.75	1.44
187B12	**186B12**	12.6V C.T.	0.5	6.3	2.37	1.25	1.37	2.00	1.62
187C12	**186C12**	12.6V C.T.	1	12.6	2.81	1.37	1.62	2.37	1.73
187D12	**186D12**	12.6V C.T.	2.5	31.5	3.25	1.68	1.93	2.81	2.06

					Dimensions				
Part No. Single Primary 115 VAC	Part No. Dual Primary 115/230 VAC	Secondary (R.M.S.) VAC	Current (Amps)	VA Rating	Length L	Depth (Not Including Terminals) B	Height C	Mounting Centers D	Depth To Terminal E
187E12	**186E12**	12.6V C.T.	4	50.4	3.68	1.81	2.25	3.12	2.19
187F12	**186F12**	12.6V C.T.	8	100.8	4.03	2.25	2.56	3.50	2.62
187A16	-	16V C.T.	0.15	2.4	2.06	1.06	1.18	1.75	1.44
187B16	**186B16**	16V C.T.	0.4	6.4	2.37	1.25	1.37	2.00	1.62
187C16	**186C16**	16V C.T.	0.8	12.8	2.81	1.37	1.62	2.37	1.73
187D16	**186D16**	16V C.T.	2	32	3.25	1.68	1.93	2.81	2.06
187E16	**186E16**	16V C.T.	3.5	56	3.68	1.81	2.25	3.12	2.19
187F16	**186F16**	16V C.T.	6.25	100	4.03	2.25	2.56	3.50	2.62
187A20	-	20V C.T.	0.12	2.4	2.06	1.06	1.18	1.75	1.44
187B20	**186B20**	20V C.T.	0.3	6	2.37	1.25	1.37	2.00	1.62
187C20	**186C20**	20V C.T.	0.6	12	2.81	1.37	1.62	2.37	1.73
187D20	**186D20**	20V C.T.	1.5	30	3.25	1.68	1.93	2.81	2.06
187E20	**186E20**	20V C.T.	2.8	56	3.68	1.81	2.25	3.12	2.19
187F20	**186F20**	20V C.T.	5	100	4.03	2.25	2.56	3.50	2.62
187A24	-	24V C.T.	0.1	2.4	2.06	1.06	1.18	1.75	1.44
187B24	**186B24**	24V C.T.	0.25	6	2.37	1.25	1.37	2.00	1.62
187C24	**186C24**	24V C.T.	0.5	12	2.81	1.37	1.62	2.37	1.73
187D24	**186D24**	24V C.T.	1.25	30	3.25	1.68	1.93	2.81	2.06
187E24	**186E24**	24V C.T.	2.4	57.6	3.68	1.81	2.25	3.12	2.19
187F24	**186F24**	24V C.T.	4	96	4.03	2.25	2.56	3.50	2.62
187A28	-	28V C.T.	0.08	2.4	2.06	1.06	1.18	1.75	1.44
187B28	**186B28**	28V C.T.	0.2	5.6	2.37	1.25	1.37	2.00	1.62
187C28	**186C28**	28V C.T.	0.42	12	2.81	1.37	1.62	2.37	1.73
187D28	**186D28**	28V C.T.	1.07	30	3.25	1.68	1.93	2.81	2.06
187E28	**186E28**	28V C.T.	2	56	3.68	1.81	2.25	3.12	2.19
187F28	**186F28**	28V C.T.	3.57	100	4.03	2.25	2.56	3.50	2.62
187A36	-	36V C.T.	0.06	2.34	2.06	1.06	1.18	1.75	1.44
187B36	**186B36**	36V C.T.	0.17	6.12	2.37	1.25	1.37	2.00	1.62
187C36	**186C36**	36V C.T.	0.35	12.6	2.81	1.37	1.62	2.37	1.73
187D36	**186D36**	36V C.T.	0.85	30.6	3.25	1.68	1.93	2.81	2.06
187E36	**186E36**	36V C.T.	1.5	54	3.68	1.81	2.25	3.12	2.19
187F36	**186F36**	36V C.T.	2.8	100.8	4.03	2.25	2.56	3.50	2.62
187A48	-	48V C.T.	0.05	2.4	2.06	1.06	1.18	1.75	1.44
187B48	**186B48**	48V C.T.	0.12	6	2.37	1.25	1.37	2.00	1.62
187C48	**186C48**	48V C.T.	0.25	12	2.81	1.37	1.62	2.37	1.73
187D48	**186D48**	48V C.T.	0.62	30	3.25	1.68	1.93	2.81	2.06
187E48	**186E48**	48V C.T.	1.2	57.6	3.68	1.81	2.25	3.12	2.19
187F48	**186F48**	48V C.T.	2	96	4.03	2.25	2.56	3.50	2.62
187A56	-	56V C.T.	0.04	2.5	2.06	1.06	1.18	1.75	1.44
187B56	**186B56**	56V C.T.	0.11	6.16	2.37	1.25	1.37	2.00	1.62
187C56	**186C56**	56V C.T.	0.21	12.3	2.81	1.37	1.62	2.37	1.73
187D56	**186D56**	56V C.T.	0.53	30	3.25	1.68	1.93	2.81	2.06
187E56	**186E56**	56V C.T.	1	56	3.68	1.81	2.25	3.12	2.19
187F56	**186F56**	56V C.T.	1.8	100.8	4.03	2.25	2.56	3.50	2.62
187A120	-	120V C.T.	0.02	2.4	2.06	1.06	1.18	1.75	1.44
187B120	**186B120**	120V C.T.	0.05	6	2.37	1.25	1.37	2.00	1.62
187C120	**186C120**	120V C.T.	0.1	12	2.81	1.37	1.62	2.37	1.73
187D120	**186D120**	120V C.T.	0.25	30	3.25	1.68	1.93	2.81	2.06
187E120	**186E120**	120V C.T.	0.5	60	3.68	1.81	2.25	3.12	2.19
187F120	**186F120**	120V C.T.	0.85	102	4.03	2.25	2.56	3.50	2.62

Tags: **3AH**, **power transformer**, **chassis mount**, **low voltage**, **solder**, **quick connect**, **terminal**, **insulated**, *Data subject to change without notice*
dual primary, **single primary**

© 2024. Hammond Manufacturing Ltd. All rights reserved.