HAMMOND

Quality Products. Service Excellence.

Tee Fitting *CWTF Series*

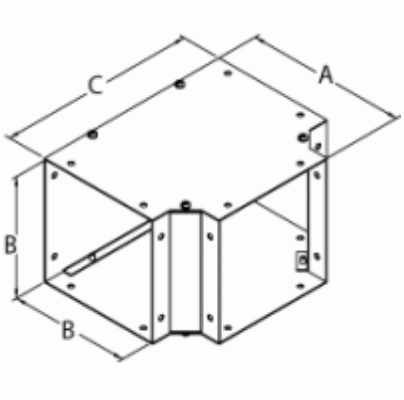

Painted Steel

Part No.	Size
CWTF2	2.5 x 2.5
CWTF4	4 x 4
CWTF6	6 x 6
CWTF8	8 x 8
CWTF10	10 x10
CWTF12	12 x 12

Unpainted Galvanized

Part No.	Size
CWTF2G	2.5 x 2.5
CWTF4G	4 x 4
CWTF6G	6 x 6
CWTF8G	8 x 8
CWTF10G	10 x10
CWTF12G	12 x 12

TAA COMPLIANT

MANUFACTURED IN NORTH AMERICA

RoHS

Tags: **CW**, **wireway**, **tee fitting**

Data subject to change without notice

© 2024. Hammond Manufacturing Ltd. All rights reserved.