Connector Location A

Connector Location B

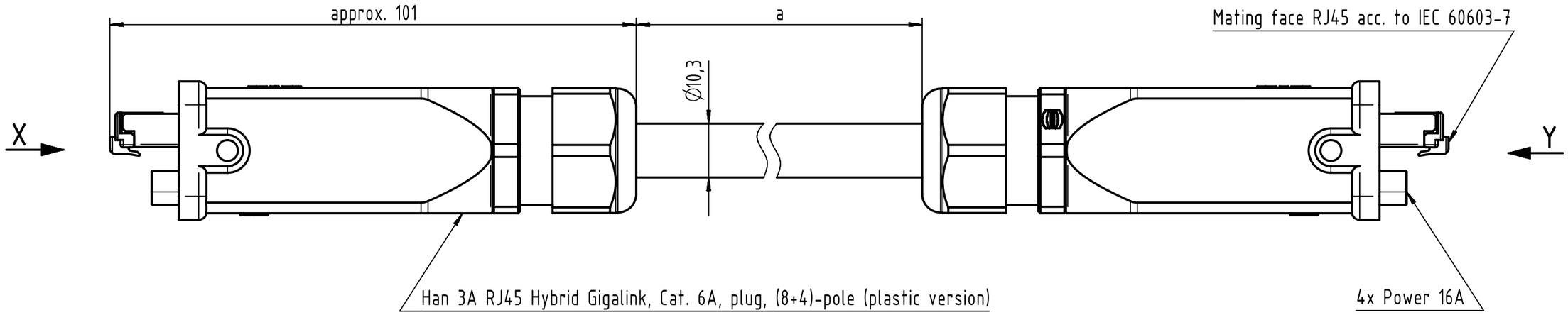

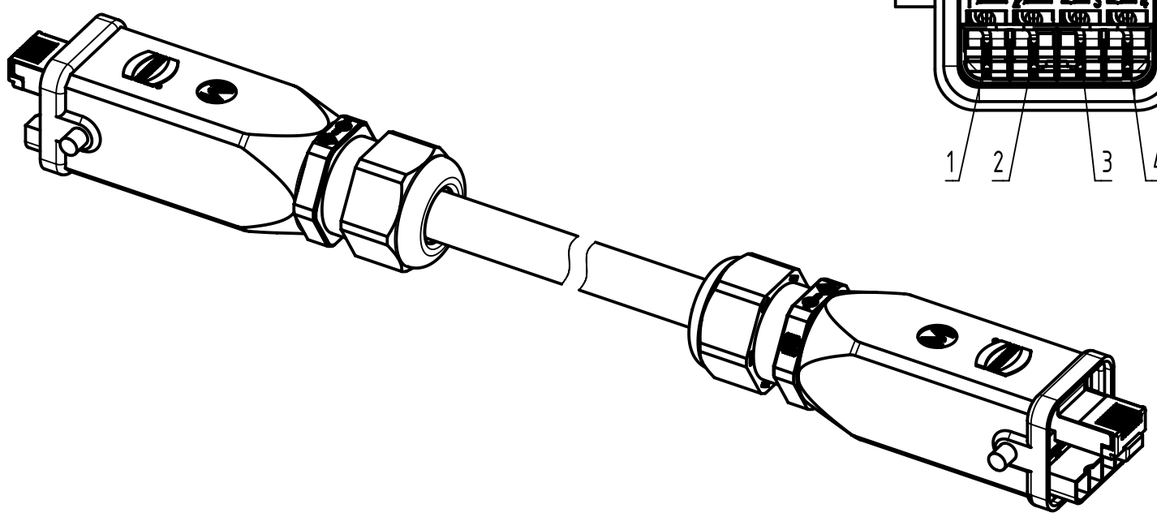

- Protection level: IP67
- Temperature range: -20°C ... +70°C

X

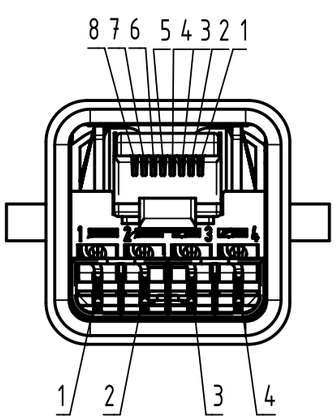

Loading-Plan
acc. to TIA/EIA 568B

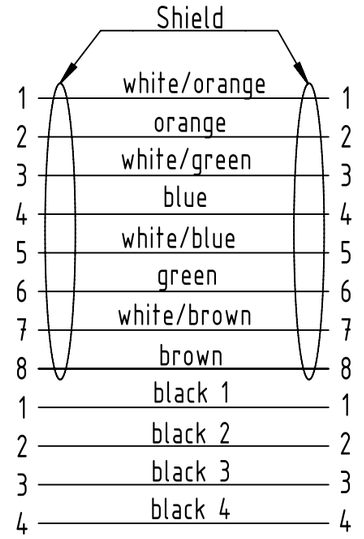

Y

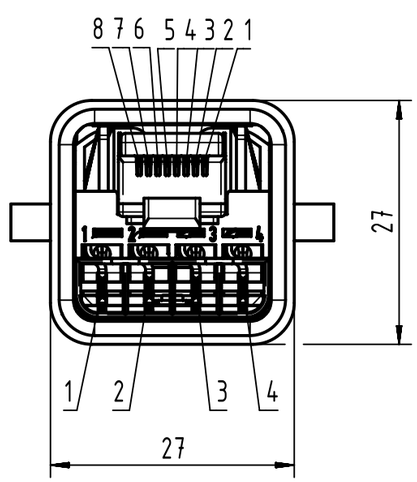

All Dimensions in mm	Tech. Character.	Free size tol.	According to production drawing

All rights reserved

Department HCS - RO	Created by COSTEA	Inspected by COSTEA	Standardisation MUNTEANV	Date 2017-12-11	State Final Release
HARTING Customised Solutions D-32339 Espelkamp	Title Han 3A RJ45 Hybrid Cable Assembly				Doc-Key / ECM-Nr. 100174924/UGD/006/F 500000128829
	Type TB	Number 094572515XX		Rev. F	Page 1/2

A3

Cont. no.	Part no.	Type of cable	Dim. a[m]
21	09457251518	Hybrid cable 4x2xAWG26/7 + 4x1.5mm², PUR, Cat.6, black	60
20	09457251517		50
19	09457251516		40
18	09457251515		30
17	09457251521		25
16	09457251514		20
15	09457251513		15
14	09457251519		12
13	09457251512		10
12	09457251511		9
11	09457251510		8
10	09457251509		7
9	09457251508		6
8	09457251507		5
7	09457251506		4
6	09457251520		3.5
5	09457251505		3
4	09457251504		2
3	09457251503		1.5
2	09457251502		1
1	09457251501		0.5

All Dimensions in mm | Tech. Character. | Free size tol. | According to production drawing

All rights reserved

Department HCS - RO

HARTING Customised Solutions
D-32339 Espelkamp

Created by	Inspected by	Standardisation	Date	State
COSTEA	COSTEA	MUNTEANV	2017-12-11	Final Release

Title: Han 3A RJ45 Hybrid Cable Assembly

Doc-Key / ECM-Nr.: 100174924/UGD/006/F 500000128829

Type: TB | Number: 094572515XX | Rev.: F | Page: 2/2

A3