

ALL NEW PRODUCTS!

Heyco® Fan Guards

- Good corrosion resistance, easy to clean.
- Screw mount.
- Material: Steel wire Electroplated; Nickel Chrome finish.

NO. Rings	PART NO.	DESCRIPTION	PART DIMENSIONS A in.	A mm.	B in.	B mm.	C in.	C mm.	D in.	D mm.	E in.	E mm.	F in.	F mm.	G in.	G mm.	H in.	H mm.	STYLE
2	**0975**	FG 25	.94	2,4	1.11	28,2	.41	10,5	.09	2,2	-	-	-	-	.06	1,4	.06	1,4	1
	0976	FG 40	1.15	29,1	1.26	32,0	.56	14,2	.19	4,8	.16	4,0	.16	4,0					
3	**0977**	FG 50	1.65	42,0	1.62	41,1	.56	14,2	.19	4,8	.15	3,7	.18	4,6	.06	1,6	.06	1,6	
4	**0978**	FG 60	2.09	53,2	1.97	50,0	.56	14,2	.17	4,4	.12	3,0							
5	**0979**	FG 80	3.00	76,2	2.81	71,5	.56	14,2	.19	4,9	.14	3,5	.20	5,2	.07	1,8			2
6	**0980**	FG 92	3.54	90,0	3.25	82,5	.56	14,2	.22	5,5	.17	4,2	.18	4,6	.06	1,6	.07	1,8	
8	**0981**	FG 120	4.55	115,6	4.16	104,8	.35	9,0	.22	5,5	.10	2,6	.18	4,6	.07	1,8			
10	**0982**	FG 150	6.08	154,4	6.38	162,1	.64	16,3	.25	6,5	.32	8,1	.19	4,8	.07	1,8	.09	2,3	3

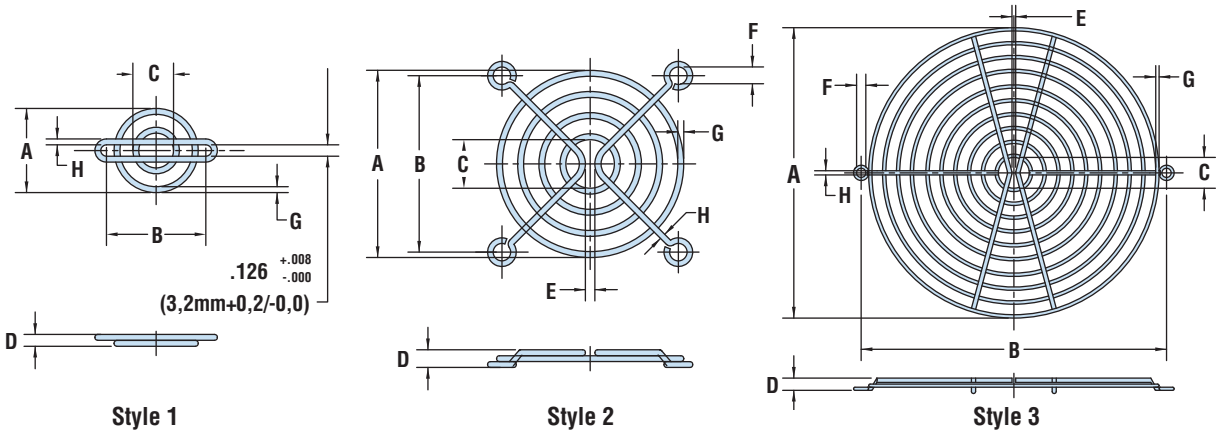

Style 1 | Style 2 | Style 3

Heyco® Fan Guard Rivets

- Permanently mount fan to chassis or finger guards to fan.
- Provide tamper resistant application.
- Prongs expand to hold securely as pin is driven.
- Single-operation front mounting saves time and money.
- Low profile head.
- Installed by hand or with installation tool.
- Part Description Key: PR/DR XXX-YYY where XXX = Mounting Hole Diameter (inches) and YYY = minimum Panel Thickness (inches).

WILL FIT THESE PANELS MOUNTING HOLE DIA. in.	mm.	PANEL THICKNESS Min. in.	mm.	Max. in.	mm.	PART NO. Black	DESCRIPTION	PART DIMENSIONS A Length in.	mm.	B Head Height in.	mm.	C Head Diameter in.	mm.	EXTRACTION FORCE Lbs	Kg
Snap Style															
.124	3,1	.81	20,5	.85	21,5	**9326**	PR 124-807	.91	23,0	.06	1,6	.25	6,4	17.6	8
Push Style															
.137	3,5	.81	20,5	.85	21,5	**9327**	DR 137-807	.91	23,0	*	*	.20	5,0	17.6	8

UL94V-2 Nylon 6 - both Rivets
*Contact Heyco.

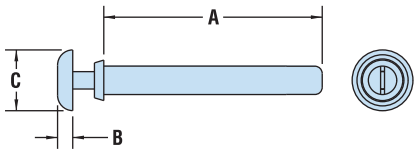

Snap Style

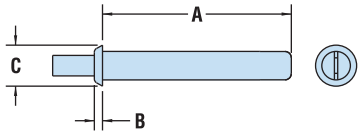

Push Style

Quick Specs

	Rivets
Material	Nylon 6/6
Flammability Rating	94V-2
Temperature Range	-.4°F (-18°C) to 185°F (85°C)

1-800-526-4182 • 732-286-1800 (NJ) • FAX: 732-244-8843 • www.heyco.com