

Heyco® Nytye® Mounting Platforms

- Multiple sizes, strengths, and mounting options anchor Nytyes® securely.
- Five Types:
  1) Flat - Adhesive-Back and Screw Mounts
  2) Saddle - Screw Mount only
  3) Push Mount - Arrowhead and Blind Mounts
  4) Snap Over Bolt
  5) Stainless Steel Edge Clip "SunRunner Series"
- Rubber based adhesive effective up to 158°F (70°C).
- Acrylic based adhesive effective up to 167°F (75°C).
- Apply Adhesive-Backed parts to a clean, dry surface.
- Parts are not intended for direct exposure to harsh environments (extreme heat/sunlight, humidity, etc.) and better suited for use inside an enclosure in these types of environments.

Tensile Lbs.	Width in.	Width mm.
18	.10	2,5
40	.14	3,6
50	.19	4,8
120	.30	7,6

Flat Platforms – Adhesive Back Mount

	MAX. TENSILE STRENGTH Lbs.	N	ADHESIVE	INSERT POINTS	RELEASE TAB?	PART NO. Natural	DESCRIPTION	PART DIMENSIONS A in.	A mm.	B in.	B mm.	C in.	C mm.
NEW!	3	13	Rubber Acrylic	4	yes	**3591** **3591A**	MP-050x050-ABR MP-050x050-ABA	.50	12,7	.50	12,7	.17	4,3
NEW!	15	67	Rubber Acrylic	4	yes	**3595** **3595A**	MP-075x075-ABR MP-075x075-ABA	.75	19,1	.75	19,1	.28	7,0
NEW!			Rubber Acrylic	4	yes	**3594** **3594A**	MP-080x080-ABR MP-080x080-ABA	.80	20,3	.80	20,3	.19	4,8
NEW!	20	89	Rubber Acrylic	4	yes	**3599** **3599A**	MP-100x100-ABR MP-100x100-ABA	1.00	25,4	1.00	25,4	.32	8,1
	50	222	Rubber	2 4	yes yes	**3590*** **3593***	MP-110x110-ABR MP-115x115-ABR	1.10 1.15	27,9 29,2	1.10 1.15	27,9 29,2	.24 .26	6,0 6,6

Standard color natural. *These adhesive-backed parts are also screw mountable.

Flat Platforms – Screw Mount

	MAX. TENSILE STRENGTH Lbs.	N	SCREW SIZE in.	SCREW SIZE mm.	INSERT POINTS	PART NO. Natural	DESCRIPTION	PART DIMENSIONS A in.	A mm.	B in.	B mm.	C in.	C mm.
	24	105	#6	3,5	4	**4264**	MP-075x075-S6	.75	19,1	.75	19,1	.24	6,0
	50	222	#8	4,0	4	**4265**	MP-038x075-S8	.75	19,1	.38	9,5	.20	5,0
	38	170				**3589**	MP-100x100-S8	1.00	25,4	1.00	25,4	.28	7,1
NEW!	15	68			2	**3580**	MP-110x110-S8	1.10	27,9	1.10	27,9	.20	5,1
NEW!	16	70	#6	3,5	4	**3581**	MP-115x115-S6	1.15	29,2	1.15	29,2	.22	5,6

Standard color natural.

Saddle Platforms – Screw Mount

MAX. TENSILE STRENGTH Lbs.	N	SCREW SIZE in.	SCREW SIZE mm.	INSERT POINTS	PART NO. Natural	DESCRIPTION	PART DIMENSIONS A in.	A mm.	B in.	B mm.	C in.	C mm.
18	80	#4	3,0	2	**4269**	MP S-4	.51	13,0	.33	8,3	.24	6,1
50	222	#8	4,0	2	**3759**	MP S-8	.60	15,2	.38	9,7	.28	7,0
120	534	#10	5,0	2	**3753**	MP S-10	.87	22,2	.62	15,7	.39	9,9

Standard color natural.

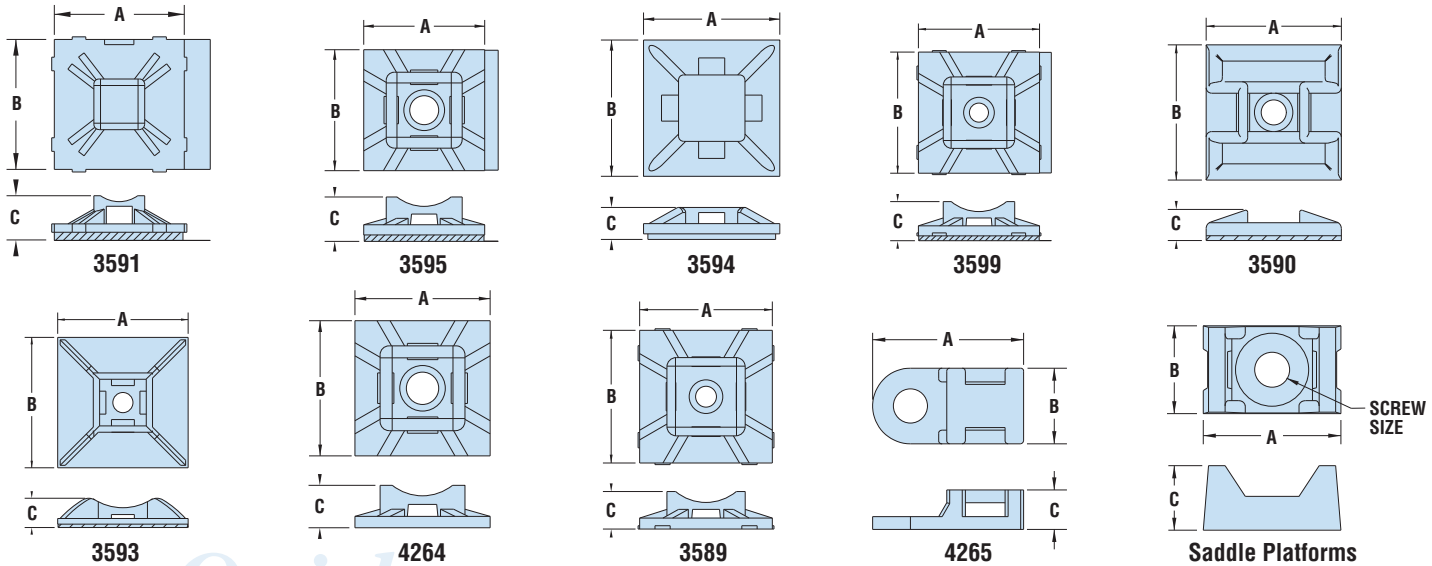

Material		Nylon 6/6
Certifications	c UL us	Recognized under the Component Program of Underwriters' Laboratories File E54523 (Adhesive-Back Mount parts only)
Flammability Rating		94V-2
Temperature Range		-32°F (0°C) to 158°F (70°C)

Quick Specs

1-800-526-4182 • 732-286-1800 (NJ) • FAX: 732-244-8843 • www.heyco.com