

Heyco® Specialty Pins

PART DATA					PART NO.	APPLICATION TOOLING*				
Overall Length in.	Dia. in.	Type	AWG Range	Material		Die**	Feeds	Tool Packs	Crimp Punch	Anvil
PCB†										
1.01	.187	Snap-thru	-	Brass	**5940**	-	Bulk	-	-	-
1.23	.187	Solder	-	Brass	**5907**					
Medical Pins-Ribs										
1.23	.178	IDC - 3	28-24	Brass	**8034**	8034UXX5	Left to Right	B968L/B969L	C706	C705
1.19	.178	VE - 3	26-22	Brass	**8032**	8032UXX5	Left to Right	B900L/B901L	C143	C147
				Post-Ni	**8033**	8033UXX5				
			26-30	Post-Ni	**8035**	8035UXX5				
		AL - 3	26-22	Post-Ni	**8036**	8036UXX5				
		WB - 4	26-22	Brass	**8030**	8030UXX5				

* Heyco high volume Application Tooling, designed for 3-5 ton presses - see page 8-59.
Heyco Mini Applicators, designed for 1.5-3 ton bench top presses, are available - see page 8-59.
** "XX" represents Wire Gauge. Please specify Wire Gauge when ordering.
† For additional PCB Contacts, see page 8-38.

- **PCB** pins designed for use with circuit boards.
- **Medical Pins** feature insulation crimp and dimples on barrel for added strain relief and better contact.
- DFARS Compliant



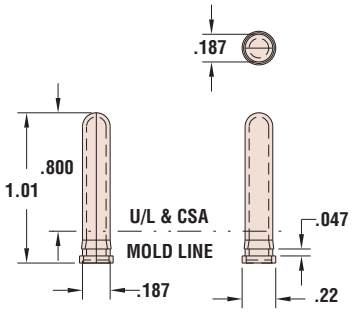

5940

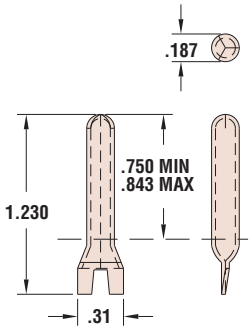

5907

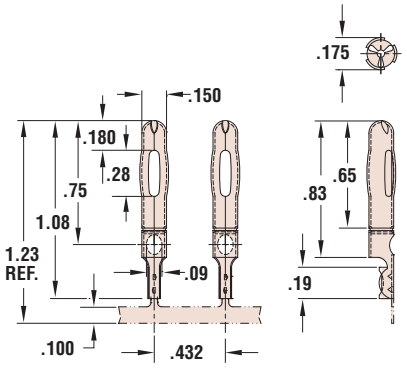

Medical Pin 8034

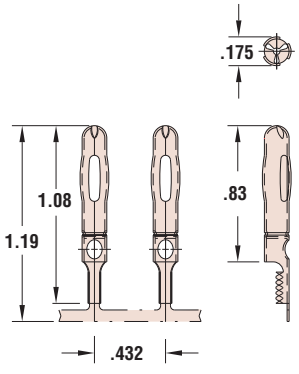

Medical Pins - Other

Materials	Alloy 260 Brass (70% Cu, 30% Zn. Higher Cu content resists dezincification Post-Ni = Brass, Nickel plated after stamping

Quick Specs