

Heyco® Preassembled Cordset Components

For Heyco Application Equipment, see pages 8-59 and 8-60

Female Bridge–NEMA 5-15R

PART DATA			PART NO.	APPLICATION TOOLING*			
Type	Color	AWG Range		Die	Feeds	Crimp Punch	Anvil
5-15R Female Bridge	Black	18-12	**S7570**	Z370	Semi-Auto*	Z335, Z409	Z334
	Natural	18-12	**S7571**				
	Clear	18-12	**S7574****				
5-15R Female Bridge	Black	12-10	**S7572**	Z641	Semi-Auto*	Z636, Z637	Z635
	Natural	12-10	**S7573**				
	Clear	12-10	**S7575****				

* Semi-Automatic Terminating Equipment is available, see below and page 8-60.
**Clear bridges are not UL recognized.

- **Crimp all three terminals at once.**
- Faster loading of plug molds.
- **Reduce plug molding and cycle time.**
- Assure reliable contact performance.
- Improve plug quality.
- **Reduce PVC usage and plug cost!**
- Eliminate the need for a polarity barrier.
- Pass UL/CSA cold temperature insertion test.
- Automated terminating equipment is available, see page 8-60.
- DFARS Compliant

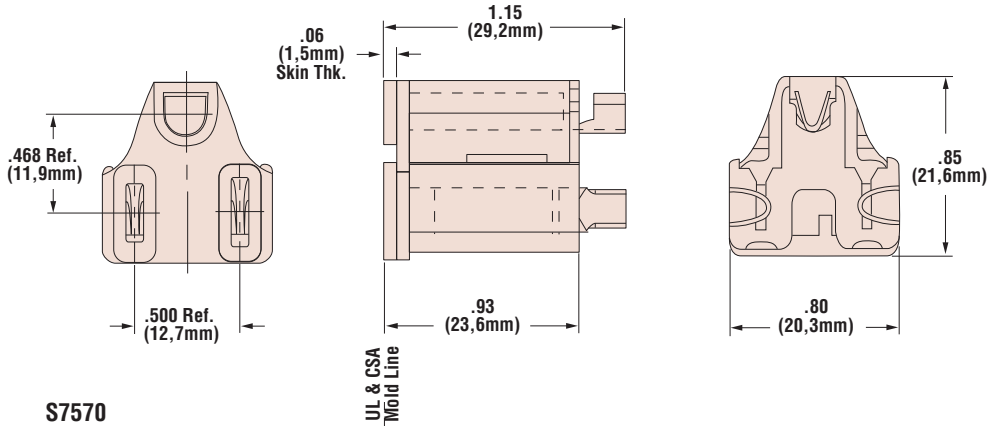

S7570

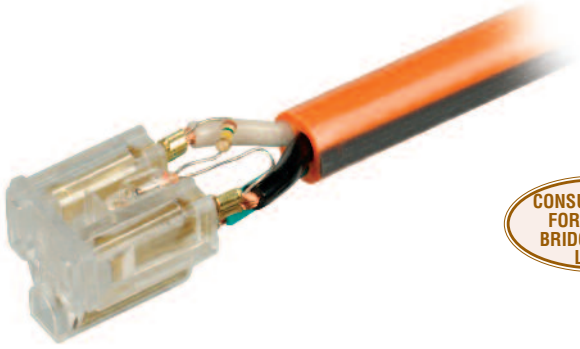

CONSULT HEYCO FOR FEMALE BRIDGES WITH LIGHT



Heyco Female Bridge Machine (see page 8-60)

Materials		Alloy 260 Brass (70% Cu, 30% Zn. Higher Cu content resists dezincification)
		Black and Natural - 6/6 Nylon, Clear - Polycarbonate
Certifications		Recognized Component under UL File E231361
Standards		NEMA 5-15R

Quick Specs