Anybus® BY HMS NETWORKS

Anybus® X-gateway™

USER MANUAL

HMSI-27-262 4.0 en-US ENGLISH



HMS Connecting Devices™

Important User Information

Disclaimer

The information in this document is for informational purposes only. Please inform HMS Industrial Networks of any inaccuracies or omissions found in this document. HMS Industrial Networks disclaims any responsibility or liability for any errors that may appear in this document.

HMS Industrial Networks reserves the right to modify its products in line with its policy of continuous product development. The information in this document shall therefore not be construed as a commitment on the part of HMS Industrial Networks and is subject to change without notice. HMS Industrial Networks makes no commitment to update or keep current the information in this document.

The data, examples and illustrations found in this document are included for illustrative purposes and are only intended to help improve understanding of the functionality and handling of the product. In view of the wide range of possible applications of the product, and because of the many variables and requirements associated with any particular implementation, HMS Industrial Networks cannot assume responsibility or liability for actual use based on the data, examples or illustrations included in this document nor for any damages incurred during installation of the product. Those responsible for the use of the product must acquire sufficient knowledge in order to ensure that the product is used correctly in their specific application and that the application meets all performance and safety requirements including any applicable laws, regulations, codes and standards. Further, HMS Industrial Networks will under no circumstances assume liability or responsibility for any problems that may arise as a result from the use of undocumented features or functional side effects found outside the documented scope of the product. The effects caused by any direct or indirect use of such aspects of the product are undefined and may include e.g. compatibility issues and stability issues.

Table of Contents

Page

1 Preface 3

1.1 About This Document 3

1.2 Document history 3

1.3 Document Conventions 4

1.4 Document-specific Conventions 4

2 Description 5

2.1 Introduction 5

2.2 Data Exchange 6

2.3 Status and Diagnostics 7

2.4 Controlling the X-gateway from the Network 9

2.5 Error Handling 9

2.6 Data Mapping Examples 10

3 Installation 11

3.1 DIN Rail Mount 11

3.2 Connectors and Indicators 12

4 Anybus Configuration Manager 13

4.1 Introduction 13

4.2 Setup 14

4.3 Configuration 14

A Technical Data 15

This page intentionally left blank

1 Preface

1.1 About This Document

This document describes the functions and general configuration of the Anybus X-gateway.

Documentation and software for the specific fieldbus and Ethernet network interfaces can be downloaded from www.anybus.com/support.

1.2 Document history

Version	Date	Description
1.00	2004-04-02	First release
2.00	2014-05-01	Major update
2.10	2014-08-26	Compliance information update
3.0	2017-01-23	Major rewrite
3.1	2018-03-23	Minor update
4.0	2019-03-19	Rebranding update, some graphics updated Removed certification info (now in datasheet only) This document now replaces SCM-1202-038.

1.3 Document Conventions

Ordered lists are used for instructions that must be carried out in sequence:

1. First do this
2. Then do this

Unordered (bulleted) lists are used for:

- Itemized information
- Instructions that can be carried out in any order

...and for action-result type instructions:

► This action...

→ leads to this result

Bold typeface indicates interactive parts such as connectors and switches on the hardware, or menus and buttons in a graphical user interface.

```
Monospaced text is used to indicate program code and other
kinds of data input/output such as configuration scripts.
```

This is a cross-reference within this document: *Document Conventions, p. 4*

This is an external link (URL): www.hms-networks.com

This is additional information which may facilitate installation and/or operation.

This instruction must be followed to avoid a risk of reduced functionality and/or damage to the equipment, or to avoid a network security risk.

Caution
This instruction must be followed to avoid a risk of personal injury.

WARNING
This instruction must be followed to avoid a risk of death or serious injury.

1.4 Document-specific Conventions

The following conventions are used specifically in this document:

- Hexadecimal values are written as NNNNh (the suffix h indicates hexadecimal notation).
- 16 and 32 bit values are stored in Motorola (big endian) format unless otherwise stated.

2 Description

2.1 Introduction

The Anybus X-gateway consists of two Anybus fieldbus or Ethernet network interface modules and an intelligent gateway platform which transfers data between the two networks.

The X-gateway can be configured via a USB port using a Windows-based application, Anybus Configuration Manager. The on-board network interfaces are normally configured from the respective networks, using third-party configuration tools.

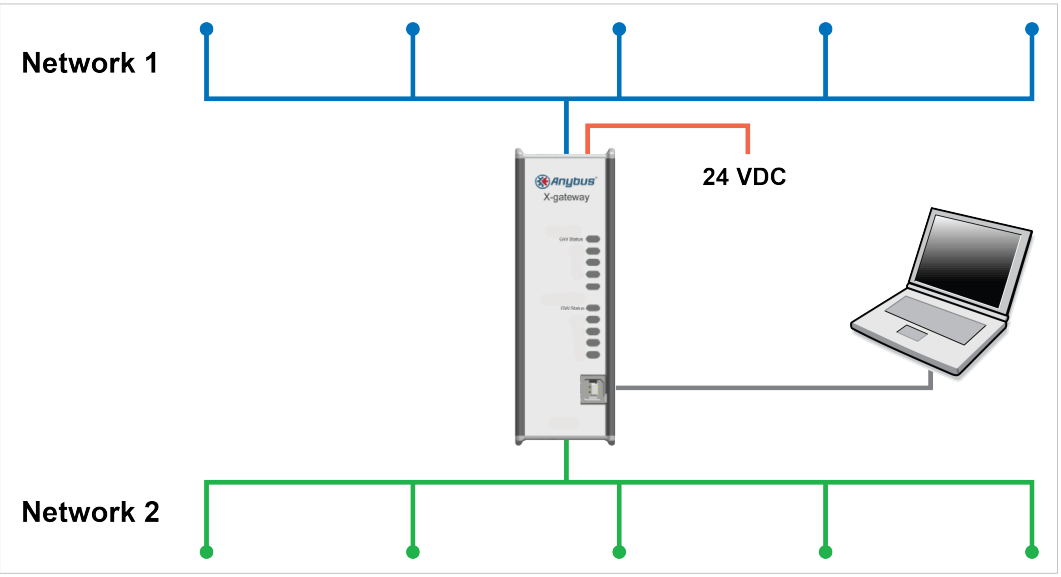

Fig. 1 Anybus X-gateway concept overview

This document describes only the gateway platform. The network interfaces are described in their own documentation.

2.2 Data Exchange

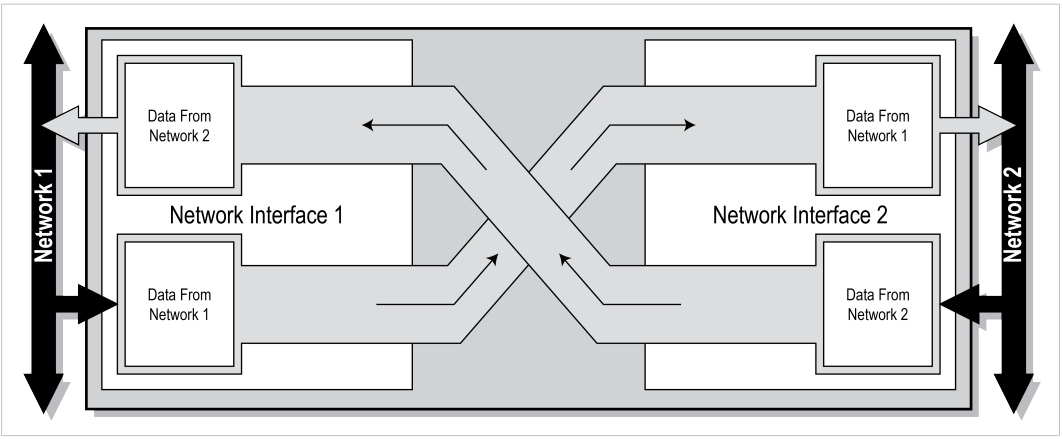

Fig. 2 Anybus X-gateway data exchange

The terminology and definitions used for different types of data vary between different network types. Most networks distinguish between fast, cyclical I/O data, and less time-critical acyclic data. In the Anybus X-gateway these types of data are generally referred to respectively as *I/O Data* and *Parameter Data*.

Each of the two network interfaces exchanges data on its network through its own buffer, which can hold up to 512 bytes of data. The actual amount of data that can be exchanged depends on the settings in the network interface and may therefore be significantly less than 512 bytes, which is only the maximum size of the buffer. The default setting is 20 bytes in each direction. See the documentation for the respective network interface for more information.

In addition to the I/O data the buffers may contain network status information and instructions for controlling the network interface. Depending on the type of network interface this may be general diagnostic information (Status Word), a list of the active slaves (Live List), or other network-specific information. In a network master, part of the buffer may be used to start/stop data exchange and to reset the gateway (Control Word).

The exchange of data between the buffers is separate from the network data exchange. While the X-gateway ensures data consistency (where applicable), it does not feature any mechanisms for synchronisation between the two networks.

2.3 Status and Diagnostics

2.3.1 Status Word

Runtime status and diagnostic information can be provided through the *Status Word*, which (if enabled) takes up the first two bytes of the output area (data **to** the network).

The Status Word is disabled by default and must be enabled for each network separately through Anybus Configuration Manager.

(MSB) **(LSB)**

bit 15	**bit 14**	**bit 13**	**bit 12**	**bit 11**	**bit 10**	**bit 9**	**bit 8**	**bit 7**	**bit 6**	**bit 5**	**bit 4**	**bit 3**	**bit 2**	**bit 1**	**bit 0**
Gateway Cycle Counter				General Error Counter				(reserved)				Master Mode		Init	Run

Gateway Cycle Counter

A 4-bit counter, incremented for each successful gateway cycle (each time data has been successfully transferred between the network interfaces).

General Error Counter

A 4-bit counter, incremented each time the throughput of the gateway exceeds 100 ms.

Master Mode (master configurations only)

If a network interface is confgured as a network master, these bits indicate the current operation mode of the master to the other network.

The exact definition depends on the network interface type. See the documentation for the respective interface for more information.

Init

Indicates if the other network interface has been initialized.

Bit set (1) = Other network interface successfully initialized

Bit cleared (0) = Could not initialize other network interface

Run

Indicates the status of the data exchange on the other network.

Bit set (1) = Other network is online and exchanging data

Bit cleared (0) = Other network is offline or not exchanging data

2.3.2 Live List (Master Configurations Only)

The *Live List* provides the active status of the slaves associated with an on-board network interface acting as master. The list is assembled by the master interface and forwarded to the other network each gateway cycle.

The Live List functionality is disabled by default and must be enabled for the master interface through Anybus Configuration Manager.

Offset	bit 0	bit 1	bit 2	bit 3	bit 4	bit 5	bit 6	bit 7
0	Slave 0	Slave 1	Slave 2	Slave 3	Slave 4	Slave 5	Slave 6	Slave 7
1	Slave 8	Slave 9	Slave 10	Slave 11	Slave 12	Slave 13	Slave 14	Slave 15
2	Slave 16	Slave 17	Slave 18	Slave 19	Slave 20	Slave 21	Slave 22	Slave 23
3	Slave 24	Slave 25	Slave 26	Slave 27	Slave 28	Slave 29	Slave 30	Slave 31
4	Slave 32	Slave 33	Slave 34	Slave 35	Slave 36	Slave 37	Slave 38	Slave 39
5	Slave 40	Slave 41	Slave 42	Slave 43	Slave 44	Slave 45	Slave 46	Slave 47
6	Slave 48	Slave 49	Slave 50	Slave 51	Slave 52	Slave 53	Slave 54	Slave 55
7	Slave 56	Slave 57	Slave 58	Slave 59	Slave 60	Slave 61	Slave 62	Slave 63

Bit set (1) = Slave active

Bit cleared (0) = Slave not active

The exact definition of each set or cleared bit depends on the network interface used. See the documentation for the respective interface for more information.

2.3.3 Network-specific Status

Some network interfaces may provide additional registers or status lists. See the documentation for the respective interface for more information.

2.4 Controlling the X-gateway from the Network

Some functions in the X-gateway can be controlled from the network by setting the corresponding bits in the *Control Word*, which (if enabled) takes up the first two bytes of the input area (data coming **from** the network).

The Control Word is disabled by default and must be enabled for each network separately via Anybus Configuration Manager. When enabled, specific actions may be required in order for the X-gateway to start exchanging data.

(MSB) **(LSB)**

bit 15	bit 14	bit 13	bit 12	bit 11	bit 10	bit 9	bit 8	bit 7	bit 6	bit 5	bit 4	bit 3	bit 2	bit 1	bit 0
								Reset				Master Mode			

Master Mode (master configurations only)

If a network interface is confgured as a network master, these bits indicate the current operation mode of the master to the other network.

The exact definition depends on the network interface type. See the documentation for the respective interface for more information.

Reset

Can be used to reset the Anybus X-gateway.

Bit set (1) = Restart the gateway and re-initialize both network interfaces

Bit cleared (0) = No action

2.4.1 Network-specific Controls

Some network interfaces may provide additional methods of controlling the X-gateway from the network. See the documentation for the respective interface for more information.

2.5 Error Handling

If a network goes offline the X-gateway can either freeze (keep the current value) or clear (set to zero) the data from the network that has gone offline. Which action to take can be selected via Anybus Configuration Manager.

See also *Anybus Configuration Manager, p. 13*.

2.6 Data Mapping Examples

Usage of the Control Word, Status Word and Live List affect how data is mapped to the network interfaces in the Anybus X-gateway.

The following generic examples describe typical configurations. The actual representation of data on the network is highly network-specific and is described in the documentation for the respective interface.

Typical Slave-to-Slave Gateway Configuration

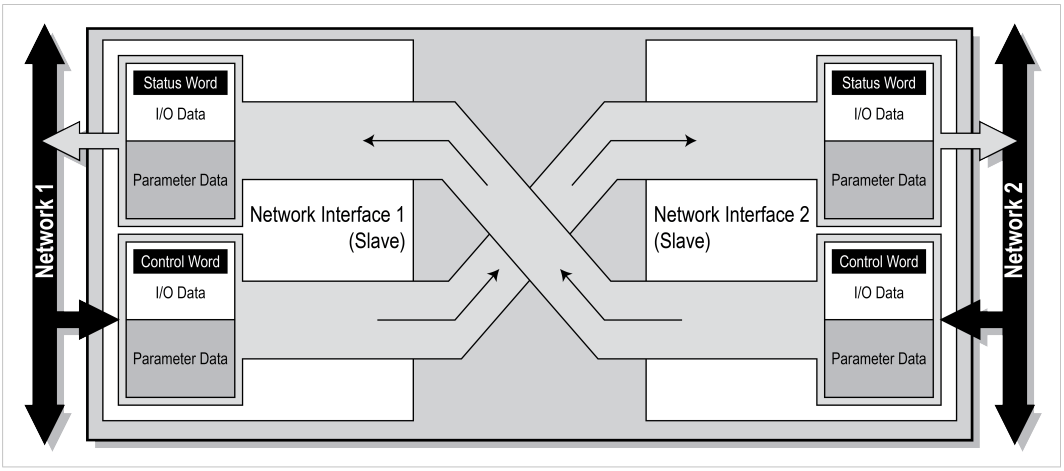

Fig. 3 Slave-to-slave example

This example illustrates how data is mapped in a typical slave-to-slave gateway configuration. The *Control Word* and *Status Word* is here enabled for both networks.

Typical Master-to-Slave Gateway Configuration

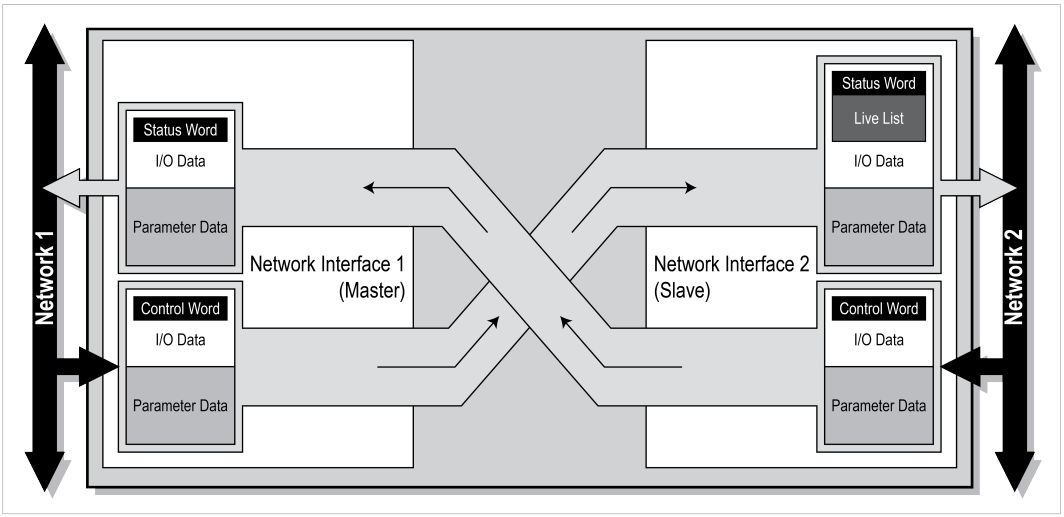

Fig. 4 Master-to-slave example

This example illustrates how data is mapped in a typical master-to-slave gateway configuration. The mapping is similar to the slave-to-slave configuration but also features the *Live List*, which indicates the active status of the slaves that are attached to the master interface.

3 Installation

3.1 DIN Rail Mount

The unit is designed to be mounted on a standard DIN rail. No tools are needed.

> **!** The unit must be electrically grounded through the DIN rail for EMC compliance. Make sure that the unit is correctly mounted on the rail and that the rail is properly grounded.

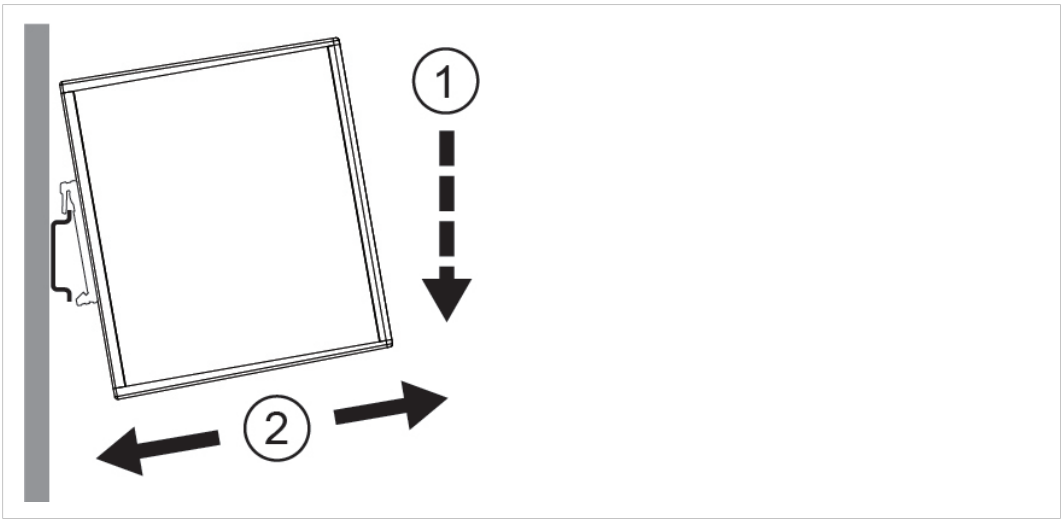

Fig. 5 DIN rail mount

Sideways mounting

The unit can alternatively by mounted sideways on the DIN rail. A T10 Torx screwdriver is needed to reposition the DIN clip.

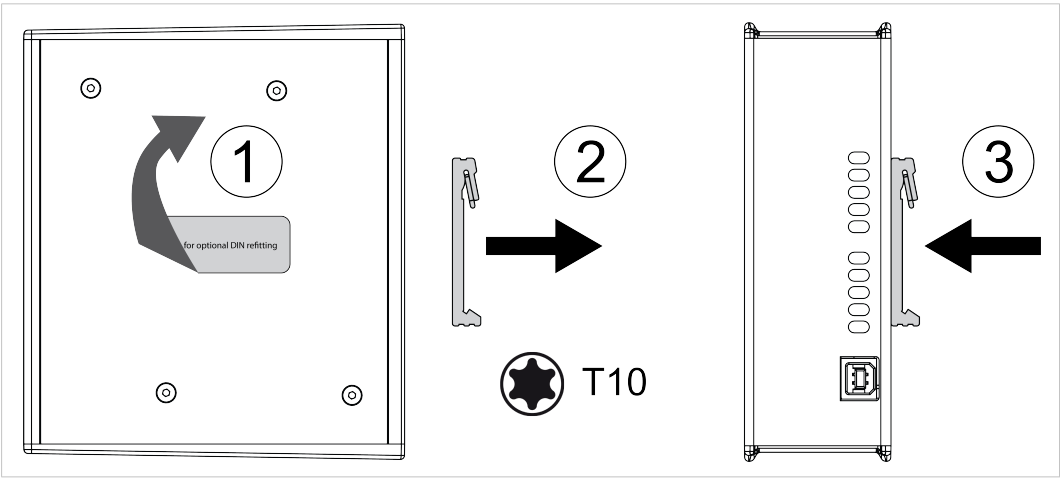

Fig. 6 Sideways mount

1. Remove the sticker covering the screw holes on the right side panel.
2. Unscrew the DIN clip from the back of the unit. Use a T10 Torx screw driver.
3. Refit the DIN clip to the side panel.

3.2 Connectors and Indicators

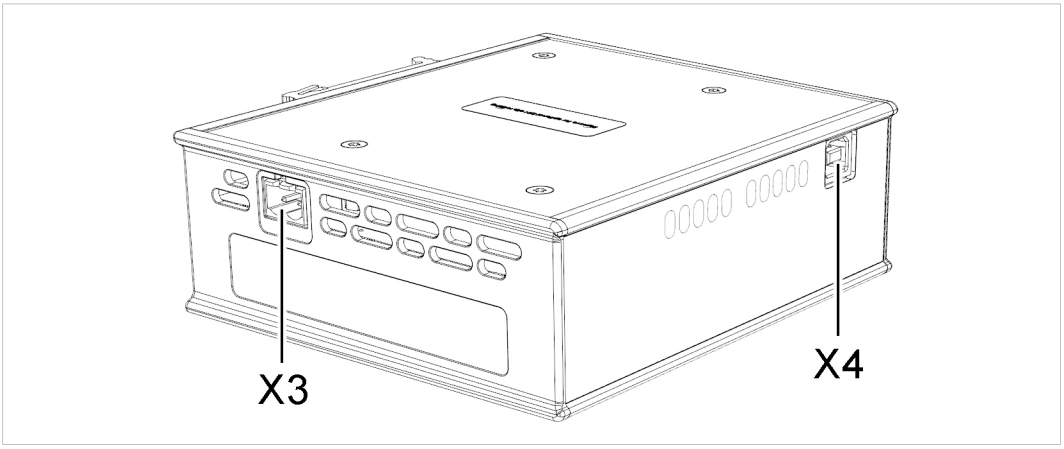

Fig. 7 Connectors

3.2.1 Power Connector (X3)

> **!** Connecting power with reverse polarity or using the wrong type of power supply may damage the equipment. Make sure that the power supply is connected correctly and of the recommended type.

Pin	Signal
1	+24 VDC
2	Power Ground

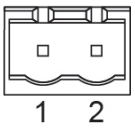

3.2.2 USB Connector (X4)

Pin	Signal
1	+5 V input
2	USBDM (USB communication)
3	USBDP (USB communication)
4	Signal ground
Housing	Cable shield

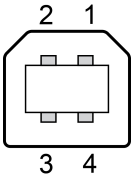

3.2.3 LED Indicators

LED	Indication	Meaning
GW Status	Green	Communication running
	Red	Communication error
	Red, flashing	Network interface error

Other LED indicators, connectors and configuration switches are described in the documentation for each respective network interface.

4 Anybus Configuration Manager

4.1 Introduction

The Anybus X-gateway usually requires only a minimum of configuration during setup, since the on-board network interfaces are configured from the respective networks. Some parameters in the gateway may however need to be adjusted to suit specific networks and applications.

The gateway settings are accessed via the USB port of the X-gateway using the Windows-based application Anybus Configuration Manager.

This section describes only the general features and how to install Anybus Configuration Manager. The network-specific settings are described in detail in the built-in help system and in the documentation for each respective interface.

Anybus Configuration Manager requires Windows XP or later.

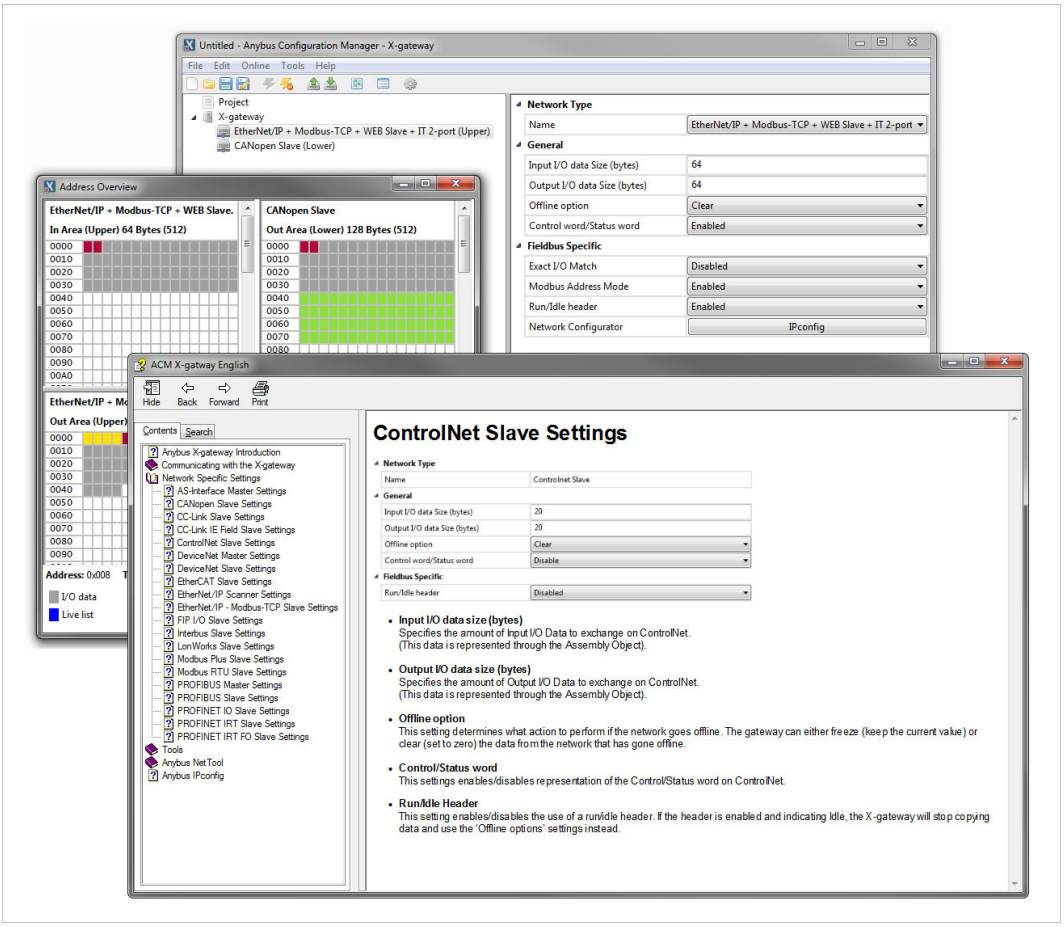

Fig. 8 Anybus Configuration Manager

4.2 Setup

1. Download Anybus Configuration Manager and Anybus Transport Provider from www.anybus.com/support.
2. Unzip the contents of each archive in a folder on your computer and double-click on the setup executable, then follow the instructions in the installation wizard.
3. Connect a USB cable between the computer and the USB port on the X-gateway.
4. Start Anybus Configuration Manager and select **Online > Select Connection**.

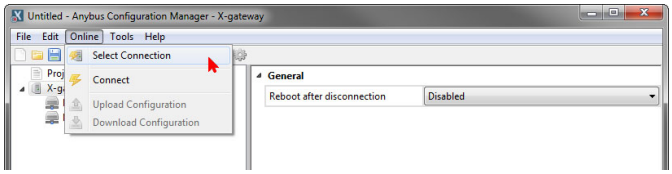

Fig. 9 Select a connection

5. Select the connection to use for the X-gateway and click on **OK**. The USB connection will be named *Anybus Serial Connection*.

   There is normally no need to configure the connection unless you are connected to more than one X-gateway. See the built-in help for more information.
6. Select **Online > Connect** to open the connection to the X-gateway.

4.3 Configuration

Once Anybus Configuration Manager has established a connection to the X-gateway, configurations from the unit can be retrieved, viewed and modified.

1. Select **Online > Upload Configuration** to retrieve the configuration from the X-gateway.
2. The configuration can now be viewed and modified as required.
3. After making changes, select **Online > Download Configuration** to apply the modified configuration to the X-gateway.

For more information about the various functions and settings, see the built-in help in Anybus Configuration Manager and the documentation for each network interface.

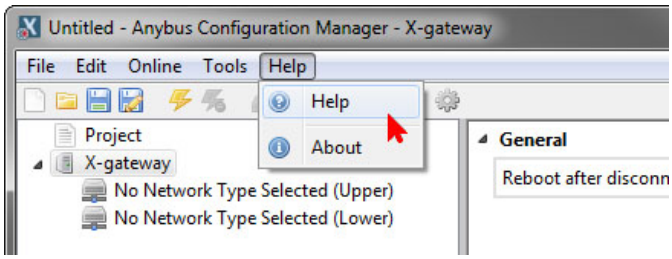

Fig. 10 Anybus Configuration Manager help menu

A Technical Data

Technical Specifications	
Model name	**Anybus X-gateway**
Dimensions (L x W x H)	114 x 44 x 127 mm
Weight	400 g
Operating temperature	-25 to +65 °C (IEC 60068-2-1 and IEC 60068-2-2) (max. +50 °C for fibre optic interfaces)
Storage temperature	-40 to +85 °C (IEC 60068-2-1 and IEC 60068-2-2)
Humidity range	5–95 % RH, non-condensing (IEC 60068-2-30)
Pressure range	85–105 kPa
Power supply	24 V ±20 % DC regulated power source
Current consumption	Typical: 200 mA @ 24 VDC Maximum: 400 mA @ 24 VDC
Configuration port	USB (USB to CAN cable not included)
Galvanic isolation	Yes, on both network sides
Mechanical rating	IP20, NEMA rating 1
Mounting	DIN rail (EN 50022) Network shield conductance via DIN rail
Certifications	See www.anybus.com/support

All measurements are in millimeters.

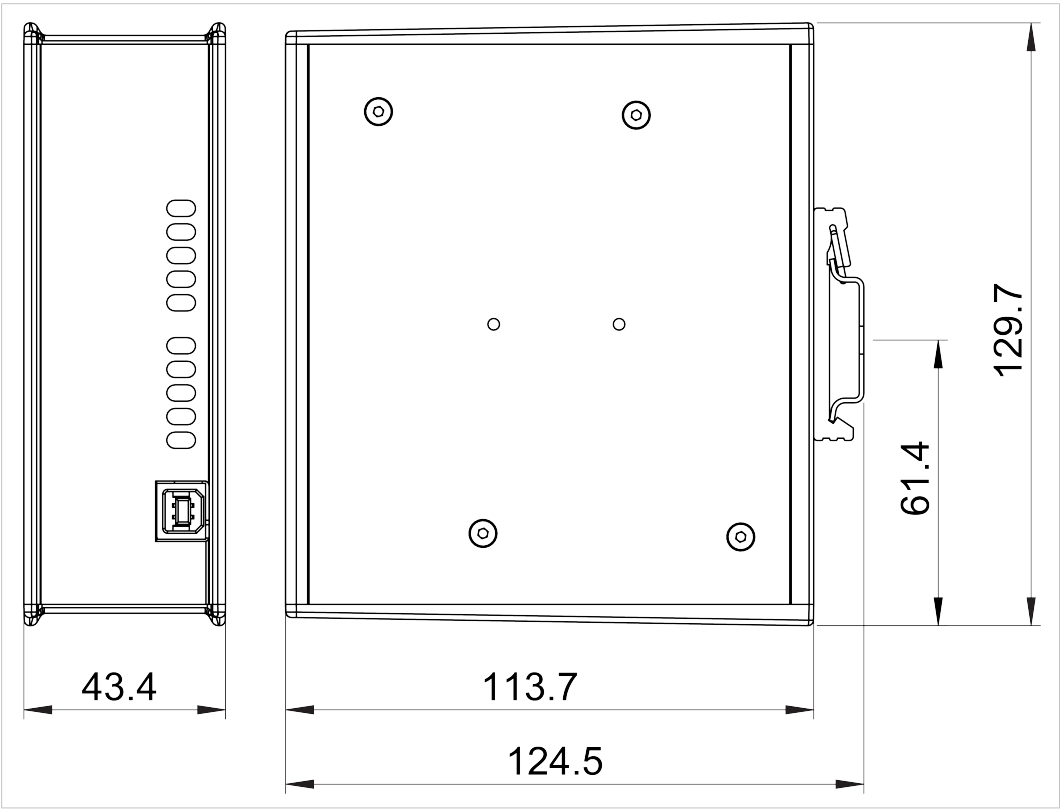

Fig. 11 Anybus X-gateway dimensions

© 2019 HMS Industrial Networks
Box 4126
300 04 Halmstad, Sweden

info@hms.se