ENGLISH

INMBSDAI001R000 Modbus RTU Gateway

COMPATIBLE WITH VRV AND SKY AIR CONDITIONING SYSTEMS COMMERCIALIZED BY DAIKIN

USER MANUAL
Version 1.0.1
Publication date 2024-03-01



Copyright © 2021 Intesis

Disclaimer

The information in this document is for informational purposes only. Please inform HMS Networks of any inaccuracies or omissions found in this document. HMS Networks disclaims any responsibility or liability for any errors that may appear in this document.

HMS Networks reserves the right to modify its products in line with its policy of continuous product development. The information in this document shall therefore not be construed as a commitment on the part of HMS Networks and is subject to change without notice. HMS Networks makes no commitment to update or keep current the information in this document.

The data, examples and illustrations found in this document are included for illustrative purposes and are only intended to help improve understanding of the functionality and handling of the product. In view of the wide range of possible applications of the product, and because of the many variables and requirements associated with any particular implementation, HMS Networks cannot assume responsibility or liability for actual use based on the data, examples or illustrations included in this document nor for any damages incurred during installation of the product. Those responsible for the use of the product must acquire sufficient knowledge in order to ensure that the product is used correctly in their specific application and that the application meets all performance and safety requirements including any applicable laws, regulations, codes and standards. Further, HMS Networks will under no circumstances assume liability or responsibility for any problems that may arise as a result from the use of undocumented features or functional side effects found outside the documented scope of the product. The effects caused by any direct or indirect use of such aspects of the product are undefined and may include e.g. compatibility issues and stability issues.

Table of Contents

1. Description and Order Codes 1

2. Overview 2

3. Connections 3

3.1. Connecting the Gateway to the AC Indoor Unit 3
3.2. Connection procedure for Modbus 4

4. Quickstart Guide 5

5. Modbus Interface Specification 6

5.1. Modbus Physical Layer 6
5.2. Modbus Registers 6
5.2.1. Control and Status Registers 6
5.2.2. Configuration Registers 8
5.2.3. Considerations on Temperature Registers 9
5.3. DIP Switch Configuration 11
5.4. Implemented Modbus Functions 12
5.5. Device LED indications 13
5.6. Termination resistors and Fail-safe Biasing Mechanism 13

6. Technical Specifications 14

7. Dimensions 15

8. List of supported AC unit models 16

9. Error Codes 17

Appendix A. ACI MBS-1 Client / Server of Operation Mode 21

1. Description and Order Codes

Modbus RTU (EIA-485) Gateway for Daikin Air Conditioners.
Compatible with VRV and SKY air conditioning systems commercialized by Daikin.

Use the compatibility tool to get a complete list of compatible AC units: https://compatibility.intesis.com/#

ORDER CODE	LEGACY ORDER CODE
INMBSDAI001R000	DK-RC-MBS-1

2. Overview

The Intesis® INMBSDAI001R000 gateway provides full integration of Daikin air conditioners into Modbus RTU (EIA-485) networks.

Figure 1. Integration of Daikin AC units into a Modbus RTU installation using the Intesis INMBSDAI001R000 gateway.

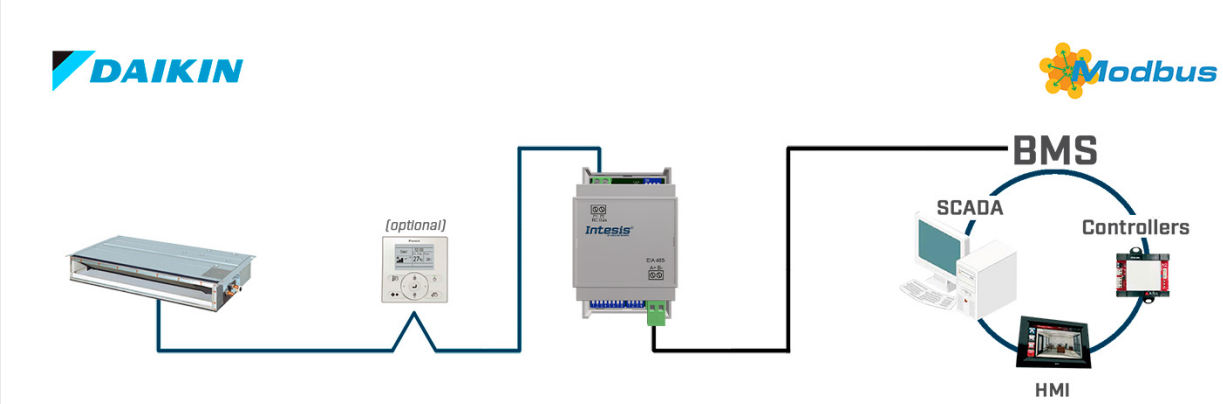

MAIN FEATURES

- Small dimensions for quick and easy installation (93 x 53 x 58 mm / 3.7” x 2.1” x 2.3”)
- DIN rail / wall mount.
- No external power supply required
- Direct connection to the AC indoor unit
- Direct connection to Modbus RTU networks
- Configuration from built-in DIP switches blocks or from Modbus RTU
- AC unit status monitoring, including runtime counter and error indication for maintenance management
- Simultaneous AC unit control from both the Modbus RTU system and the unit remote controller

NOTE

- Up to 63 Intesis devices can be connected to the same network. This gateway is a Modbus slave device, so installation of Modbus repeaters may be required depending on the speed setting.
- Up to 16 AC indoor units can be connected to INMBSDAI001R000, controlling them as one (not individually).

TIP

Please refer to section List of supported AC unit models (page 16) for details on compatible models.

IMPORTANT

This document assumes that the user is familiar with these technologies.

3. Connections

NOTE

- A 2-pin plug-in screw terminal is provided for connection to the AC unit over P1P2 bus.
- A 2-pin plug-in screw terminal is provided for connection to the Modbus RTU EIA-485 network.

3.1. Connecting the Gateway to the AC Indoor Unit

Connect the Daikin AC unit network bus (P1P2) to the gateway using the X and Y poles of the gateway's AC Unit port.

1. Disconnect mains power from the AC unit
2. Connect the interface to the P1P2 bus at any point of the line. This bus is also used for connecting the AC unit to a wired remote controller, if present.
3. A Daikin wired Remote Controller (RC) is optional, but if present and connected to the P1P2 bus, then Master/Slave configuration must be set:
   a. **No wired RC**. INMBSDAI001R000 must be configured as Master
   b. **RC as Master**. INMBSDAI001R000 must be configured as Slave
   c. **RC as Slave**. INMBSDAI001R000 must be configured as Master

NOTICE

The max length for the P1P2 bus is 500 m (1,640 ft).

3.2. Connection procedure for Modbus

NOTE
Remember to check the Common Connections.

1. Connect the EIA-485 bus wires (A+, B-) to the INMBSDAI001R000 plug-in screw terminal block.
2. Connect the ground wire to the plug-in screw terminal block (SG).

IMPORTANT
Observe polarity.

IMPORTANT
Remember the characteristics of the standard EIA-485 bus:

- Maximum distance of 1200 meters (0.75 miles).
- Maximum of 32 devices connected to the bus.
- A termination resistor of 120 Ω is needed at each end of the bus. The gateway has an internal bus biasing circuit already incorporating the termination resistor. It can be enabled using DIP switch SW4:
  - **Position 4:**
    ON: 120 Ω termination active.
    OFF: 120 Ω termination inactive (default position).

IMPORTANT
If the termination resistor is enabled and you install the gateway at one of the ends of the bus, do not install an additional termination resistor at that end.

4. Quickstart Guide

CAUTION
Always observe safety precautions when working on electrical installations. Comply with the safety-related practices as required by Health and Safety standards.

1. Disconnect the AC unit from the power supply.
2. Install the interface near the AC indoor unit, or even inside it if possible. Available options are DIN rail mounting and wall mounting.

   NOTE
   Consult the Installation Sheet for details.

3. Connect the AC unit to the gateway using the P1P2 bus and the plug-in screw terminal block on the gateway's end. See details in Connecting the Gateway to the AC Indoor Unit (page 3).
4. Connect the EIA-485 bus wires (A+, B-) to the INMBSDAI001R000 supplied plug-in screw terminal block. More info in Connection procedure for Modbus (page 4).
5. Check DIP-Switch settings to meet project requirements. By default, the gateway is set to slave address 1 and baud rate 9600 bps. For details see section DIP Switch Configuration (page 11)
6. Fit the front cover, then power up the AC unit.
7. The Intesis device is ready to be used in your system.

NOTE
DIP-switches configuration will only take effect after a device reboot.

5. Modbus Interface Specification

5.1. Modbus Physical Layer

The INMBSDAI001R000 gateway implements a Modbus RTU (server) interface to be connected to an EIA-485 bus. It features 8-N-2 communication (eight data bits, no parity, and two stop bits) with several baud rates available (2400 bps, 4800 bps, **9600 bps -default-**, 19200 bps, 38400 bps, 57600 bps, 76800 bps, and 115200 bps). It also supports 8-N-1 communication (eight data bits, no parity, and one stop bit). The default Modbus server address is 1.

NOTE
AUTO-DETECT FUNCTION. The gateway will automatically detect the communication type (8-N-1 or 8-N-2) and set itself accordingly. No user action or manual settings are required.

5.2. Modbus Registers

All registers are 16-bit unsigned holding register type and use the standard Modbus big-endian notation.

IMPORTANT
The INMBSDAI001R000 gateway has a polling limit of 50 registers. Therefore, it is not possible to poll more than 50 registers simultaneously, for example, if the same TX frame asks for the status of more than 50 registers.

5.2.1. Control and Status Registers

Table 1. Control and Status registers

Register Address (protocol address)	Register Address (PLC address)	Description	R/W
0	1	AC unit On/Off 0: Off 1: On	R, W
1	2	AC unit Mode[1] 0: Auto (default value) 1: Heat 2: Dry 3: Fan 4: Cool	R, W
2	3	AC unit Fan Speed[1] 0: Auto 1: Low 2: Mid 3: High	R, W

Register Address (protocol address)	Register Address (PLC address)	Description	R/W
3	4	AC unit Up/Down Vane Position[1] 1: Position 1 (Horizontal) 2: Position 2 (Horizontal) 3: Position 3 (Medium) 4: Position 4 (Vertical) 5: Position 5 (Vertical) 10: Swing	R, W
4	5	AC unit Temperature Setpoint[1,2,3] -32768 (initialization value) 16 .. 31°C 61 .. 88°F	R, W
5	6	AC unit Temperature reference[1,2,3] -32678 (initialization value) 10 .. 38°C 50 .. 100°F	R
6	7	Window Contact 0: Closed (default value) 1: Open	R, W
7	8	Gateway Disablement[4] 0: Gateway enabled (default value) 1: Gateway disabled	R, W
8	9	AC Remote Control Disablement[4,5] 0: Remote Control enabled (default) 1: Remote Control disabled	R, W
9	10	AC unit Operation Time[4] 0 .. 65535 (hours). Time the AC unit is “On"	R, W
10	11	AC unit Alarm Status 0: No alarm condition 1: Alarm condition	R
11	12	Error Code 0: No error present 65535 (-1 if it is read as signed value): Communication error with the AC unit For possible error codes and their explanation, see	R
22	23	Indoor unit ambient temperature from external sensor (at Modbus side) [1,2,3,6] -32768: (Initialization value). No temperature is provided by an external sensor. Any other	R, W
23	24	AC Real temperature setpoint [1,2,3,7] When no external temperature is provided, this read-only register will have the same value as register 5 (PLC addressing). In all cases, it will show the current setpoint in the indoor unit 16 .. 31°C 60 .. 88°F	R
26	27	AC unit Left/Right Vane Position[1] 0: Auto (default value) 10: Swing	R, W
55	56	Under Voltage counter 0 .. 300	R, W

Register Address (protocol address)	Register Address (PLC address)	Description	R/W
97	98	Block Periodic Sendings [4,7,8] 0: Non-blocked (default value) 1: Blocked	R, W

[1]Available values will depend on the AC unit mode. Check the AC unit model functions in its user manual to find out the possible values for this register.

[2]The order of magnitude and the scale for this register can be adjusted to Celsius x 1°C (default), Celsius x 10°C, or Fahrenheit. See Considerations on Temperature Registers (page 9) for more information.

[3]Fahrenheit x 10 is not available.

[4]This value is stored in non-volatile memory.

[5]This register blocks the remote controller's communication installed in the MD-RC bus (if the remote is installed).

[6]For more information, refer to Considerations on Temperature Registers (page 9).

[7]If the register is configured as “0: Non-blocked”, all commands received from Modbus will be sent to the AC system. If “1: Blocked”, commands from Modbus will only be sent to the AC system if they differ from the previous value (values sent on change).

[8]The register applies to firmware version 1.5 onwards.

5.2.2. Configuration Registers

Table 2. Configuration Registers

Register Address (protocol address)	Register Address (PLC address)	Description	R/W
13	14	“Open Window” switch-off timeout[1] 0 .. 30 min Factory setting: 30 min	R,W
14	15	Modbus RTU Baud rate 2400bps 4800 bps 9600 bps (default) 19200 bps 38400 bps 57600 bps 76800 bps 115200 bps	R
15	16	Device Modbus server address 1 .. 63	R
21	22	Maximum number of fan speeds	R
48	49	Switch value	R
49	50	Device ID: 0x0801	R
50	51	Software version	R
81	82	Error address Address for the indoor unit reporting error	R

[1]Once the window contact is open, a countdown to switch off the AC Unit will start from this configured value.

5.2.3. Considerations on Temperature Registers

- **AC unit temperature setpoint (R/W)** (protocol address register 4 / PLC address register 5)
  This is the adjustable temperature setpoint value required by the user. This value can be read and written. A remote controller connected to the Daikin indoor unit will report the same temperature setpoint value as this register. This will only apply when no AC unit external temperature reference is provided from the gateway. See **AC unit external temperature reference (Modbus) (R/W)** below for more information.
- **AC unit temperature reference (R)** (protocol address register 5 / PLC address register 6)
  This register reports the temperature currently used by the Daikin indoor unit as a reference for its control loop. Depending on the indoor unit configuration, this value can be the temperature reported by the sensor on the return path of the Daikin indoor unit or the sensor in its remote controller. This value is read-only.
- **AC unit external temperature reference (Modbus) (R/W)** (protocol address register 22 / PLC address register 23)
  This register is used to provide an external temperature value from the Modbus side. The Daikin indoor unit does not allow to provide a temperature directly to the gateway to be used as a reference for its own control loop. To overcome this limitation and enable the usage of an external temperature sensor from the Modbus side when this register is set, the gateway applies the following mechanism, called "virtual temperature":
  – **Virtual Temperature**
    After a couple of values have been entered in the AC unit external temperature reference (register 22/23) and the AC unit temperature setpoint (register 4/5), the INMBSDAI001R000 gateway estimates the appropriate setpoint correction to be applied.

    TIP
    EXAMPLE: If a temperature setpoint value of 22°C and an external temperature reference value of 20°C are received (registers 4/5 and 22/23, respectively), the INMBSDAI001R000 gateway will assume that the user is demanding a +2°C increase in temperature.

    By knowing at any time the AC unit temperature reference currently used by the indoor unit to control its operation (register 5/6), the gateway can calculate the temperature setpoint correction required to reach the temperature requested by the user.

    TIP
    In the example given above, if the gateway reads an AC unit temperature reference (register 5/6) of 24°C in the indoor unit, it will apply a final setpoint of 24°C + 2°C = 26°C.

    Once set, every time the gateway detects a change in the room temperature reported by the indoor unit (register 5/6), it will adjust the setpoint accordingly.

    TIP
    Following the previous example, if the gateway receives a new temperature value (register 5/6) of 25°C from the indoor unit, the effective setpoint will be adjusted to 25°C + 2°C =27°C.

    NOTE
    The gateway constantly applies the following virtual temperature formula:

    $S_{AC}=T_{AC}-(T_{BMS}-S_{BMS})$

    where

    S_{AC}: AC setpoint: Setpoint temperature in the AC system.

    T_{AC}: AC temperature: Ambient temperature in the AC system (AC reference temperature).

    T_{BMS}: BMS temperature: Ambient temperature set by the user from the BMS protocol.

    S_{BMS}: BMS setpoint: Setpoint temperature set by the user from the BMS protocol.

When the gateway detects a change of any of the values of {S_{BMS}, T_{BMS}, or T_{AC}}, it will send the new setpoint (S_{AC}) to the indoor unit.
After a device boot, the value for the external temperature reference (register 22/23) is -32768 (0x8000). This value means that no external temperature reference has yet been provided to the object, so the system is not applying the virtual temperature function.

NOTE
The use of the external temperature reference (register 22/23) (e.g., writing a value different than -32768 / 0x8000 in it) has the following relevant consequences:

- The virtual temperature mechanism is applied. The temperature setpoint value shown by the remote controller or any other control system connected to the indoor unit may differ from the value shown in register 4/5.
- The user is not allowed to change the setpoint using the unit's remote controller, as the setpoint of the indoor unit becomes exclusively controlled by the virtual temperature mechanism.

- **AC real temperature setpoint (R)** (protocol address register 23 / PLC address register 24)
  As mentioned above, the actual temperature setpoint in the indoor unit and the temperature setpoint requested from the gateway might differ when a value in the external temperature reference (register 22/23) is entered. This register always holds the current temperature setpoint that is being used by the indoor unit; this value is the actual temperature setpoint that will be shown in any present remote controller.

NOTICE
Temperature values for these registers are expressed in the temperature scale and magnitude set via the corresponding DIP switch block.

These are the available options:

• Celsius value: The value in the Modbus register is stored in degree Celsius (i.e. a "22" value in the Modbus register must be interpreted as 22°C). This is the default value.

• Tenths of value: The value in the Modbus register is stored in decidegree Celsius (i.e. a “220” value in the Modbus register must be interpreted as 22.0°C).

• Fahrenheit value: The value in the Modbus register is stored in degree Fahrenheit (i.e. a “72” value in the Modbus register must be interpreted as 72°F (~22°C).

See DIP Switch Configuration (page 11) for more information.

5.3. DIP Switch Configuration

Figure 2. INMBSDAI001R000 Dip switches

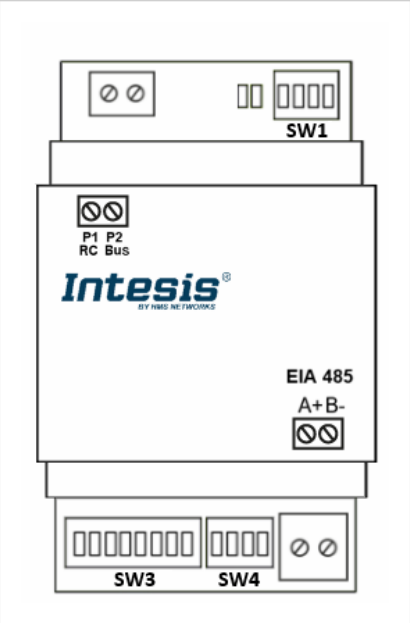

All the configuration settings on the INMBSDAI001R000 gateway can be written and read from the Modbus interface. Some of these settings can also be set up from the gateway's onboard DIP switch blocks.

The following tables apply to the interface configuration through DIP switches:

Table 3. DIP-switch SW1: AC Indoor Unit settings

SW1	Description
↓ x x x	Follower- A Daikin Controller must be present in the P1P2 bus and configured as header (default setting).
↑ x x x	Header– Daikin Controller not needed in P1P2 bus. If present, it must be configured as follower.
x ↓ x x	Master of Operation Mode (For VRV only).
x ↑ x x	Slave of Operation Mode (For VRV only) (default setting).
x x x ↓	Daikin Indor Unit ambient temperature reading as reference (default value).
x x x ↑	Daikin Remote Controller temperature reading as reference.

Table 4. DIP-switches SW3 SW4: Modbus baud rate setting.

SW3	SW4	Description
x x x x x x ↓ ↓	x x ↓ x	2400 bps
x x x x x x ↑ ↓	x x ↓ x	4800 bps
x x x x x x ↓ ↑	x x ↓ x	9600 bps (defaut setting)
x x x x x x ↑ ↑	x x ↓ x	19200 bps
x x x x x x ↓ ↓	x x ↑ x	38400 bps
x x x x x x ↑ ↓	x x ↑ x	57600 bps
x x x x x x ↓ ↑	x x ↑ x	76800 bps
x x x x x x ↑ ↑	x x ↑ x	115200 bps

Table 5. DIP-switch SW4: Temperature scale settings

SW4	Description
↓ x x x	Temperature values in Modbus register are represented in degrees (x1) (Default setting).
↑ x x x	Temperature values in Modbus register are represented in decidegrees (x10).
x ↓ x x	Temperature values in Modbus register are represented in Celsius degrees (Default value).
x ↑ x x	Temperature values in Modbus register are represented in Fahrenheit degrees.

Table 6. DIP-switch SW4: Termination resistor setting

SW4	Description
x x x ↓	EIA-485 bus without termination resistor (Default setting).
x x x ↑	Internal termination resistor of 120Ω connected to EIA-485 bus.

Table 7. DIP-switch SW3: Modbus Server Address setting

Address	Binary	SW3
0	0 0 0 0 0 0 x x	↓ ↓ ↓ ↓ ↓ ↓ x x
1	1 0 0 0 0 0 x x	↑ ↓ ↓ ↓ ↓ ↓ x x
2	0 1 0 0 0 0 x x	↓ ↑ ↓ ↓ ↓ ↓ x x
3	1 1 0 0 0 x x	↑ ↑ ↓ ↓ ↓ ↓ x x
[...]	[...]	[...]
61	1 0 1 1 1 1 x x	↑ ↓ ↑ ↑ ↑ ↑ x x
62	0 1 1 1 1 1 x x	↓ ↑ ↑ ↑ ↑ ↑ x x
63	1 1 1 1 1 1 x x	↑ ↑ ↑ ↑ ↑ ↑ x x

NOTE
DIP switch configuration will only take effect after a device reboot.

5.4. Implemented Modbus Functions

The INMBSDAI001R000 gateway implements the following standard Modbus functions:

- 03: Read Holding Registers
- 04: Read Input Registers
- 06: Write Single Register
- 16: Write Multiple Registers

IMPORTANT
Even though function 16 is available, the gateway does not allow writing operations on more than one register with the same request, so the length field when using this function should always be one.

5.5. Device LED indications

The device features two LEDs for indication of operational status.

Table 8. LED 1 (green) indications

Device status	LED indication	On/Off period	Description
Abnormal operation	LED blinking	500 ms ON / 500 ms OFF	Communication error
Normal operation	LED flashing	100 ms ON / 1900 ms OFF	Device correctly configured and running

Table 9. LED 2 (red) indications

Device status	LED indication	On/Off period	Description
Abnormal operation	LED pulse	3 s ON / then OFF	Under-voltage

Table 10. LED 1 + LED 2 (all) indications

Device status	LED indication	On/Off period	Description
Power-up	LED pulse	3 s ON / then OFF	Device Start-up
Abnormal operation	LED blinking	500 ms ON / 500 ms OFF	Flash checksum not OK

5.6. Termination resistors and Fail-safe Biasing Mechanism

IMPORTANT
The EIA-485 bus requires a 120 Ω **termination resistor** at each end to avoid signal reflections.

In order to prevent fail status detections by bus receivers when all the transmitters' outputs are in a high-impedance state, a fail-safe biasing mechanism is required. This mechanism provides a safe status in the bus (i.e., a correct voltage level) when all the transmitters' outputs are in a high-impedance state.

The INMBSDAI001R000 gateway features an onboard 120 Ω termination resistor that can be activated via the DIP switch SW 4.

NOTICE
See DIP-switch SW4: Termination resistor setting (page 12) for more information.

Some Modbus RTU EIA-485 Client devices can also provide an internal 120Ω termination resistor and/or fail-safe biasing. Check the technical documentation of the header device connected to the EIA-485 network for more information.

6. Technical Specifications

Housing	Plastic, PC type (UL 94 V-0) Net dimensions (DxWxH): Millimeters: 93 x 53 x 58 mm Inches: 3.7 x 2.1 x 2.3" Color: Light grey. RAL 7035
Weight	85 g
Mounting	Wall DIN rail EN60715 TH35
Wires (for low-voltage signals)	Per terminal: solid wires or stranded wires (twisted or with ferrule) Wire cross-section/gauge: One core: 0.2 to 2.5 mm^2 (24 to 11 AWG) Two cores: 0.2 to 1.5 mm^2 (24 to 15 AWG) Three cores: Not permitted
EIA-485 port	1 x Green pluggable terminal block (2 poles: A, B)
AC port	1 x Green pluggable terminal block (2 poles: P1, P2)
LEDs	2 x Onboard LED - operational status
Switch 1 (SW1)	1 x DIP switch for AC features
Switch 3 (SW3)	1 x DIP switch for Modbus RTU settings
Switch 4 (SW4)	1 x DIP switch for extra functions
Operational temperature	Celsius: 0 .. 60°C Fahrenheit: 32 .. 140°F
Operational humidity	5 to 95%. No condensation
Isolation voltage	1500 VDC
Isolation resistance	1000 MΩ
Protection	IP20 (IEC60529)

7. Dimensions

- **Net dimensions (DxWxH)**
  Millimeters: 93 x 53 x 58 mm
  Inches: 3.6 x 2.1 x 2.3"

IMPORTANT
Leave enough clear space to wire the gateway easily and for the subsequent manipulation of elements such as connectors, DIP switches, etc.

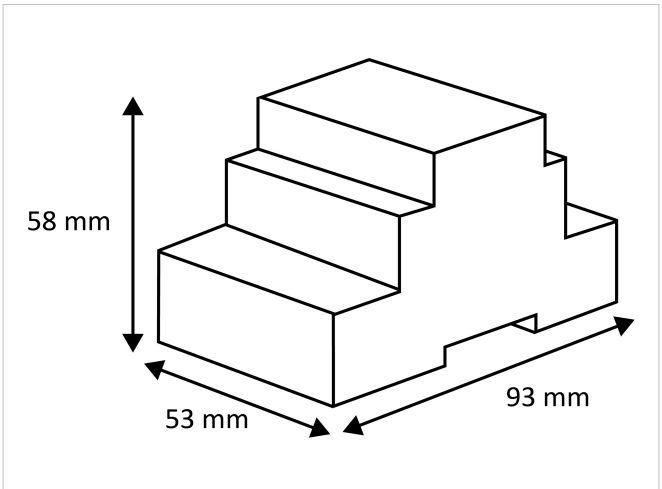

8. List of supported AC unit models

Check the compatibility list following the link below:

ttps://www.intesis.com/docs/compatibilities/inxxxdai001xx00_compatibility

9. Error Codes

Find below a list of error codes for Daikin air conditioning systems

Table 11. Daikin Error Codes

Error Code	Error in Remote Controller	Error Category	Error description
0	N/A	INMBSDAI001R000	No active error
17	A0	**Indoor Unit**	External protection devices activated
18	A1		Indoor unit PCB assembly failure
19	A2		Interlock error for fan
20	A3		Drain level system error
21	A4		Temperature of heat exchanger (1) error
22	A5		Temperature of heat exchanger (2) error
23	A6		Fan motor locked, overload, over current
24	A7		Swing flap motor error
25	A8		Overcurrent of AC input
26	A9		Electronic expansion valve drive error
27	AA		Heater overheat
28	AH		Dust collector error / No-maintenance filter error
30	AJ		Capacity setting error (indoor)
31	AE		Shortage of water supply
32	AF		Malfunctions of a humidifier system (water leaking)
33	C0		Malfunctions in a sensor system
36	C3		Sensor system of drain water error
37	C4		Heat exchanger (1) (Liquid pipe) thermistor system error
38	C5		Heat exchanger (1) (Gas pipe) thermistor system error
39	C6		Sensor system error of fan motor locked, overload
40	C7		Sensor system of swing flag motor error
41	C8		Sensor system of over-current of AC input
42	C9		Suction air thermistor error
43	CA		Discharge air thermistor system error
44	CH		Contamination sensor error
45	CC		Humidity sensor error
46	CJ		Remote control thermistor error
47	CE		Radiation sensor error
48	CF		High pressure switch sensor
49	E0	Outdoor Unit	Protection devices activated
50	E1		Outdoor uni9t PCB assembly failure
52	E3		High pressure switch (HPS) activated
53	E4		Low pressure switch (LPS) activated
54	E5		Overload of inverter compressor motor
55	E6		Over current of STD compressor motor
56	E7		Overload of fan motor / Over current of fan motor
57	E8		Over current of AC input
58	E9		Electronic expansion valve drive error
59	EA		Four-way valve error
60	EH		Pump motor over current
61	EC		Water temperature abnormal
62	EJ		(Site installed) Protection device activated

Error Code	Error in Remote Controller	Error Category	Error description
63	EE		Malfunctions in a drain water
64	EF		Ice thermal storage unit error
65	H0		Malfunctions in a sensor system
66	H1		Air temperature thermistor error
67	H2		Sensor system of power supply error
68	H3		High Pressure switch is faulty
69	H4		Low pressure switch is faulty
70	H5		Compressor motor overload sensor is abnormal
71	H6		Compressor motor over current sensor is abnormal
72	H7		Overload or over current sensor of fan motor is abnormal
73	H8		Sensor system of over-current of AC input
74	H9		Outdoor air thermistor system error
75	HA		Discharge air thermistor system error
76	HH		Pump motor sensor system of over current is abnormal
77	HC		Water temperature sensor system error
79	HE		Sensor system of drain water is abnormal
80	HF		Ice thermal storage unit error (alarm)
81	F0		No.1 and No.2 common protection device operates.
82	F1		No.1 protection device operates.
83	F2		No.2 protection device operates
84	F3		Discharge pipe temperature is abnormal
87	F6		Temperature of heat exchanger(1) abnormal
91	FA		Discharge pressure abnormal
92	FH		Oil temperature is abnormally high
93	FC		Suction pressure abnormal
95	FE		Oil pressure abnormal
96	FF		Oil level abnormal
97	J0		Sensor system error of refrigerant temperature
98	J1		Pressure sensor error
99	J2		Current sensor error
100	J3		Discharge pipe thermistor system error
101	J4		Low pressure equivalent saturated temperature sensor system error
102	J5		Suction pipe thermistor system error
103	J6		Heat exchanger(1) thermistor system error
104	J7		Heat exchanger(2) thermistor system error
105	J8		Oil equalizer pipe or liquid pipe thermistor system error
106	J9		Double tube heat exchanger outlet or gas pipe thermistor system error
107	JA		Discharge pipe pressure sensor error
108	JH		Oil temperature sensor error
109	JC		Suction pipe pressure sensor error
111	JE		Oil pressure sensor error
112	JF		Oil level sensor error
113	L0		Inverter system error
116	L3		Temperature rise in a switch box
117	L4		Radiation fin (power transistor) temperature is too high
118	L5		Compressor motor grounded or short circuit, inverter PCB fault
119	L6		Compressor motor grounded or short circuit, inverter PCB fault
120	L7		Over current of all inputs
121	L8		Compressor over current, compressor motor wire cut

Error Code	Error in Remote Controller	Error Category	Error description
122	L9		Stall prevention error (start-up error) Compressor locked, etc.
123	LA		Power transistor error
125	LC		Communication error between inverter and outdoor control unit
129	P0		Shortage of refrigerant (thermal storage unit)
130	P1		Power voltage imbalance, open phase
132	P3		Sensor error of temperature rise in a switch box
133	P4		Radiation fin temperature sensor error
134	P5		DC current sensor system error
135	P6		AC or DC output current sensor system error
136	P7		Total input current sensor error
142	PJ		Capacity setting error (outdoor)
145	U0		Low pressure drop due to insufficient refrigerant or electronicexpansion valve error, etc.
146	U1		Reverse phase, Open phase
147	U2		Power voltage failure / Instantaneous power failure
148	U3		Failure to carry out check operation, transmission error
149	U4		Communication error between indoor unit and outdoor unit,communication error between outdoor unit and BS unit
150	U5		Communication error between remote control and indoor unit / Remote controlboard failure or setting error for remote control
151	U6		Communication error between indoor units
152	U7		Communication error between outdoor units / Communication errorbetween outdoor unit and ice thermal storage unit
153	U8	System	Communication error between main and sub remote controllers (subremote control error) / Combination error of other indoor unit / remotecontrol in the same system (model)
154	U9		Communication error between other indoor unit and outdoor unit in the samesystem / Communication error between other BS unit and indoor/ outdoor unit
155	UA		Combination error of indoor/BS/outdoor unit (model, quantity, etc.),setting error of spare parts PCB when replaced
156	UH		Improper connection of transmission wiring between outdoor and outdoorunit outside control adaptor
157	UC		Centralized address duplicated
158	UJ		Attached equipment transmission error
159	UE		Communication error between indoor unit and centralized control device
160	UF		Failure to carrey out check operation Indoor-outdoor, outdoor-outdoorcommunication error, etc.
209	60		All system error
210	61		PC board error
211	62		Ozone density abnormal
212	63		Contamination sensor error
213	64		Indoor air thermistor system error
214	65		Outdoor air thermistor system error
217	68		HVU error (Ventiair dust-collecting unit)
219	6A	Others	Dumper system error
220	6H		Door switch error
221	6C		Replace the humidity element
222	6J		Replace the high efficiency filter
223	6E		Replace the deodorization catalyst
224	6F		Simplified remote controller error
226	51		Fan motor of supply air over current or overload
227	52		Fan motor of return air over current / Fan motor of return airoverload

Error Code	Error in Remote Controller	Error Category	Error description
228	53		Inverter system error (supply air side)
229	54		Inverter system error (return air side)
241	40		Humidifying valve error
242	41		Chilled water valve error
243	42		Hot water valve error
244	43		Heat exchanger of chilled water error
245	44		Heat exchanger of hot water error
258	31		The humidity sensor of return air sensor
259	32		Outdoor air humidity sensor error
260	33		Supply air temperature sensor error
261	34		Return air temperature sensor error
262	35		Outdoor air temperature sensor error
263	36		Remote controller temperature sensor error
267	3A		Water leakage sensor 1 error
268	3H		Water leakage sensor 2 error
269	3C		Dew condensation error
339	M2		Centralized remote controller PCB error
345	M8		Communication error between centralized remote control devices
347	MA		Centralized remote control devices inappropriate combination
349	MC		Centralized remote controller address setting error
65535	N/A	INMBSDAI001R000	Error in the communication between AC unit and INMBSDAI001R000



NOTE

In case you detect a non-listed error code, please contact Daikin technical support.

Appendix A. ACI MBS-1 Client / Server of Operation Mode

The client/server of operation mode DIP switch setting only applies under the following conditions:

1. The AC system is VRV
2. The VRV system uses a heat pump as the outdoor unit
3. There is more than one indoor unit in a unique system working at different modes (see table below)

If these conditions are not met, the setting is ignored.

The heat pump outdoor unit of a VRV system can only work in one mode (either heat, cool, or fan). The client of mode is the indoor unit that defines which is the working mode of the outdoor unit. If no unit has been chosen as the one that defines the working mode of the outdoor unit, the first indoor unit to be turned on is the one that is going to define and control the mode.

In a VRV system, there is only one device acting as a client of mode. If more than one is configured in this way, the system is not going to work properly. The configuration will be determined by the Daikin remote controller. The unit which controls the operation mode must have a remote controller installed.

When the INMBSDAI001R000 gateway is configured as a client of mode via the remote controller of its indoor unit, it can control all the system modes. The mode selection of the remaining gateways and the remote controllers installed in the remaining indoor units is going to be affected by the one chosen as the client of mode. These ones are going to acquire the server of mode configuration, not being able to change to any mode selection out of the following table.

Table A.1. Client and Server of Mode Configuration

Client of Mode	Mode of Operation (as Server of Mode of Operation)
Heat	Heat, Fan
Dry	Cool, Fan, Dry
Fan	Fan
Cool	Cool, Fan, Dry