Holt Integrated Circuits

MIL-STD-1553 Transformers

This page intentionally blank

Isolation Transformers – Surface Mount

Dual Core, Single Ratio

Part Number	Total Pins	Length inch. (mm)	Width inch. (mm)	Height inch. (mm)	Core(s) Ratio(s) Ratio (±3%)	1st Core Terminals	2nd Core Terminals	Schematic / Package
PM-DB2750	16	0.93 (23.622)	0.575 (14.605)	0.185 (4.699)	1:2.70	1-3:15-14	6-8:11-10	13/AB
PM-DB2751	16	0.93 (23.622)	0.575 (14.605)	0.185 (4.699)	1:3.75	1-3:16-13	6-8:12-9	14/AB
PM-DB2752	16	0.93 (23.622)	0.575 (14.605)	0.185 (4.699)	1:2.70	1-3:15-14	6-8:11-10	13/AB
PM-DB2753	16	0.93 (23.622)	0.575 (14.605)	0.185 (4.699)	1:3.75	1-3:16-13	6-8:12-9	14/AB
PM-DB2754	16	0.93 (23.622)	0.575 (14.605)	0.185 (4.699)	1:2.07	1-3:15-14	6-8:11-10	13/AB
PM-DB2756	16	0.93 (23.622)	0.575 (14.605)	0.185 (4.699)	1:2.5	1-3:15-14	6-8:11-10	13/AB
PM-DB2761	10	0.4 (10.16)	0.4 (10.16)	0.32 (8.128)	1:3.75	1-2:10-9	4-5:7-6	12/AA
PM-DB2762	10	0.4 (10.16)	0.4 (10.16)	0.32 (8.128)	1:2.5	1-2:10-9	4-5:7-6	12/AA
PM-DB2763	10	0.4 (10.16)	0.4 (10.16)	0.32 (8.128)	1.25:1	1-2:10-9	4-5:7-6	12/AA
PM-DB2765	10	0.4 (10.16)	0.4 (10.16)	0.32 (8.128)	1:2.70	1-2:10-9	4-5:7-6	12/AA
PM-DB2766	10	0.4 (10.16)	0.4 (10.16)	0.32 (8.128)	1:1.79	1-2:10-9	4-5:7-6	12/AA
PM-DB2767	10	0.4 (10.16)	0.4 (10.16)	0.32 (8.128)	1.66:1	1-2:10-9	4-5:7-6	12/AA
PM-DB2768	10	0.4 (10.16)	0.4 (10.16)	0.32 (8.128)	2.00:1	1-2:10-9	4-5:7-6	12/AA
PM-DB2769	10	0.4 (10.16)	0.4 (10.16)	0.32 (8.128)	1:2.038	1-2:10-9	4-5:7-6	12/AA
PM-DB2770	10	0.4 (10.16)	0.4 (10.16)	0.32 (8.128)	1:2.65	1-2:10-9	4-5:7-6	12/AA
PM-DB2771	10	0.4 (10.16)	0.4 (10.16)	0.32 (8.128)	1:2.07	1-2:10-9	4-5:7-6	12/AA

Dual Core, Dual Ratio

Part Number	Total Pins	Length inch. (mm)	Width inch. (mm)	Height inch. (mm)	Core(s) Ratio(s) Ratio (±3%)	1st Core Terminals	2nd Core Terminals	Schematic/ Package
PM-DB2785S	16	0.93 (23.622)	0.63 (16.002)	0.155 (3.937)	1:2.5 1:1.79	1-3:16-13 1-3:15-14	5-7:12-9 5-7:11-10	6/S
PM-DB2786S	16	0.93 (23.620)	0.575 (14.605)	0.165 (4.191)	1:2.5 1:1.79	1-3:16-13 1-3:15-14	5-7:12-9 5-7:11-10	6/AH
PM-DB27211	16	0.93 (23.620)	0.575 (14.605)	0.165 (4.191)	1:2.5 1:1.79	1-3:16-13 1-3:15-14	6-8:12-9 6-8:11-10	15/AH
PM-DB27214	16	0.93 (23.620)	0.575 (14.605)	0.165 (4.191)	1:2.65 1:2.07	1-3:16-13 1-3:15-14	6-8:12-9 6-8:11-10	15/AH
PM-DB2741S	16	0.93 (23.622)	0.63 (16.002)	0.155 (3.937)	1:1 1:0.707	1-3:16-13 1-3:15-14	5-7:12-9 5-7:11-10	6/S
PM-DB2743S	16	0.93 (23.622)	0.63 (16.002)	0.155 (3.937)	1.25:1 1.66:1	1-3:16-13 1-3:15-14	5-7:12-9 5-7:11-10	6/S
PM-DB2744S	16	0.93 (23.622)	0.63 (16.002)	0.155 (3.937)	1:2.12 1:1.5	1-3:16-13 1-3:15-14	5-7:12-9 5-7:11-10	6/S
PM-DB2745S	16	0.93 (23.622)	0.63 (16.002)	0.155 (3.937)	1:2.5 1:1.79	1-3:16-13 1-3:15-14	5-7:12-9 5-7:11-10	6/S
PM-DB2775	16	0.675 (17.145)	0.4 (10.16)	0.185 (4.699)	1:3.75 1:2.70	1-3:16-13 1-3:15-14	6-8:12-9 6-8:11-10	15/AC
PM-DB2776	16	0.675 (17.145)	0.4 (10.16)	0.185 (4.699)	1:2.5 1:1.79	1-3:16-13 1-3:15-14	6-8:12-9 6-8:11-10	15/AC
PM-DB2777	16	0.675 (17.145)	0.4 (10.16)	0.185 (4.699)	1.25:1 1.66:1	1-3:16-13 1-3:15-14	6-8:12-9 6-8:11-10	15/AC
PM-DB2779	16	0.675 (17.145)	0.4 (10.16)	0.185 (4.699)	1:2.65 1:2.07	1-3:16-13 1-3:15-14	6-8:12-9 6-8:11-10	15/AC
PM-DB27437	16	0.625 (15.87)	0.625 (15.87)	0.295 (7.493)	1:2.50 1:1.79	1-3:4-8 1-3:5-7	11-13:14-18 11-13:15-17	7/AG
PM-DB27438	16	0.625 (15.87)	0.625 (15.87)	0.295 (7.493)	1:2.50 1:1.79	1-3:4-8 1-3:5-7	11-13:14-18 11-13:15-17	7/AG

Single Core, Single Ratio

Part Number	Total Pins	Length inch. (mm)	Width inch. (mm)	Height inch. (mm)	Core(s) Ratio(s) Ratio (±3%)	1st Core Terminals	2nd Core Terminals	Schematic/ Package
PM-DB2790S	8	0.4 (10.16)	0.4 (10.16)	0.185 (4.699)	1:3.75	1-3:4-8	---	9/V
PM-DB2791S	8	0.4 (10.16)	0.4 (10.16)	0.185 (4.699)	1:2.5	1-3:4-8	---	9/V
PM-DB2792S	8	0.4 (10.16)	0.4 (10.16)	0.185 (4.699)	1:2.7	1-3:5-7	---	10/V
PM-DB2793S	8	0.4 (10.16)	0.4 (10.16)	0.185 (4.699)	1:2.5	1-3:5-7	---	10/V
PM-DB2794S	8	0.4 (10.16)	0.4 (10.16)	0.185 (4.699)	1:2.07	1-3:5-7	---	10/V
PM-DB2795S	8	0.4 (10.16)	0.4 (10.16)	0.185 (4.699)	1:1.79	1-3:5-7	---	10/V
PM-DB2796S	8	0.4 (10.16)	0.4 (10.16)	0.185 (4.699)	1:2.65	1-3:4-8	---	9/V

Single Core, Dual Ratio

Part Number	Total Pins	Length inch. (mm)	Width inch. (mm)	Height inch. (mm)	Core(s) Ratio(s) Ratio (±3%)	1st Core Terminals	2nd Core Terminals	Schematic / Package
PM-DB2711	8	0.625 (15.875)	0.625 (15.875)	0.254 (6.4516)	1:1 1:0.707	1-3:4-8 1-3:5-7	---	1/D
PM-DB2713	8	0.625 (15.875)	0.625 (15.875)	0.254 (6.4516)	1.25:1 1.66:1	1-3:4-8 1-3:5-7	---	1/D
PM-DB2714	8	0.625 (15.875)	0.625 (15.875)	0.254 (6.4516)	2.3:1 3.2:1	4-8:1-3 5-7:1-3	---	4/D
PM-DB2715	8	0.625 (15.875)	0.625 (15.875)	0.254 (6.4516)	1:2.12 1:1.5	1-3:4-8 1-3:5-7	---	1/D
PM-DB2727	8	0.625 (15.875)	0.625 (15.875)	0.254 (6.4516)	1:2.5 1:1.79	1-3:4-8 1-3:5-7	---	1/D
PM-DB2798S	8	0.4 (10.16)	0.4 (10.16)	0.185 (4.699)	1:2.5 1:1.79	1-3:4-8 1-3:5-7	---	11/V
PM-DB27501S	8	0.4 (10.16)	0.4 (10.16)	0.185 (4.699)	1:2.65 1:2.07	1-3:4-8 1-3:4-6	---	17/AE
PM-DB27503S	8	0.4 (10.16)	0.4 (10.16)	0.185 (4.699)	1:2.5 1:1.79	1-3:4-8 1-3:4-6	---	17/AE
PM-DB2741L	8	0.63 (16.002)	0.63 (16.002)	0.155 (3.937)	1:1 1:0.707	1-3:4-8 1-3:5-7	---	1/L
PM-DB2743L	8	0.63 (16.002)	0.63 (16.002)	0.155 (3.937)	1.25:1 1.66:1	1-3:4-8 1-3:5-7	---	1/L
PM-DB2744L	8	0.63 (16.002)	0.63 (16.002)	0.155 (3.937)	1:2.12 1:1.5	1-3:4-8 1-3:5-7	---	1/L
PM-DB2745L	8	0.63 (16.002)	0.63 (16.002)	0.155 (3.937)	1:2.5 1:1.79	1-3:4-8 1-3:5-7	---	1/L

Isolation Transformers – Through Hole

Dual Core, Single Ratio

Part Number	Total Pins	Length inch. (mm)	Width inch. (mm)	Height inch. (mm)	Core(s) Ratio(s) Ratio (±3%)	1st Core Terminals	2nd Core Terminals	Schematic / Package
PM-DB2746D	16	0.93 (23.622)	0.63 (16.002)	0.155 (3.937)	1:1.9	1-3:16-13	5-7:12-9	19/R

Dual Core, Dual Ratio

Part Number	Total Pins	Length inch. (mm)	Width inch. (mm)	Height inch. (mm)	Core(s) Ratio(s) Ratio (±3%)	1st Core Terminals	2nd Core Terminals	Schematic / Package
PM-DB2741D	16	0.93 (23.622)	0.63 (16.002)	0.155 (3.937)	1:1 1:0.707	1-3:16-13 1-3:15-14	5-7:12-9 5-7:11-10	6/R
PM-DB2743D	16	0.93 (23.622)	0.63 (16.002)	0.155 (3.937)	1.25:1 1.66:1	1-3:16-13 1-3:15-14	5-7:12-9 5-7:11-10	6/R
PM-DB2744D	16	0.93 (23.622)	0.63 (16.002)	0.155 (3.937)	1:2.12 1:1.5	1-3:16-13 1-3:15-14	5-7:12-9 5-7:11-10	6/R
PM-DB2745D	16	0.93 (23.622)	0.63 (16.002)	0.155 (3.937)	1:2.5 1:1.79	1-3:16-13 1-3:15-14	5-7:12-9 5-7:11-10	6/R
PM-DB27401	18	0.625 (15.875)	0.625 (15.875)	0.25 (6.35)	2:5 4:7	1-3:4-8 1-3:5-7	11-13:14-18 11-13:15-17	7/H
PM-DB27402	18	0.625 (15.875)	0.625 (15.875)	0.25 (6.35)	1:0.83 1:0.6	1-3:4-8 1-3:5-7	11-13:14-18 11-13:15-17	7/H
PM-DB27404	18	0.625 (15.875)	0.625 (15.875)	0.25 (6.35)	1:1 1:0.707	1-3:4-8 1-3:5-7	11-13:14-18 11-13:15-17	7/H
PM-DB27405	18	0.625 (15.875)	0.625 (15.875)	0.25 (6.35)	1.25:1 1.66:1	1-3:4-8 1-3:5-7	11-13:14-18 11-13:15-17	7/H
PM-DB27406	18	0.625 (15.875)	0.625 (15.875)	0.25 (6.35)	2.3:1 3.2:1	4-8:1-3 5-7:1-3	14-18:11-13 15-17:11-13	8/H
PM-DB27407	18	0.625 (15.875)	0.625 (15.875)	0.25 (6.35)	2.12:1 1.5:1	4-8:1-3 5-7:1-3	14-18:11-13 15-17:11-13	7/H
PM-DB27408	18	0.625 (15.875)	0.625 (15.875)	0.25 (6.35)	1:2.5 1:1.79	1-3:4-8 1-3:5-7	11-13:14-18 11-13:15-17	7/H
PM-DB27421	18	0.625 (15.875)	0.625 (15.875)	0.28 (7.112)	2:5 4:7	1-3:4-8 1-3:5-7	11-13:14-18 11-13:15-17	7/H
PM-DB27422	18	0.625 (15.875)	0.625 (15.875)	0.28 (7.112)	1:0.83 1:0.6	1-3:4-8 1-3:5-7	11-13:14-18 11-13:15-17	7/H
PM-DB27424	18	0.625 (15.875)	0.625 (15.875)	0.28 (7.112)	1:1 1:0.707	1-3:4-8 1-3:5-7	11-13:14-18 11-13:15-17	7/H
PM-DB27425	18	0.625 (15.875)	0.625 (15.875)	0.28 (7.112)	1.25:1 1.66:1	1-3:4-8 1-3:5-7	11-13:14-18 11-13:15-17	7/H
PM-DB27426	18	0.625 (15.875)	0.625 (15.875)	0.28 (7.112)	2.3:1 3.2:1	4-8:1-3 5-7:1-3	14-18:11-13 15-17:11-13	8/H

Part Number	Total Pins	Length inch. (mm)	Width inch. (mm)	Height inch. (mm)	Core(s) Ratio(s) Ratio (±3%)	1st Core Terminals	2nd Core Terminals	Schematic / Package
PM-DB27427	18	0.625 (15.875)	0.625 (15.875)	0.28 (7.112)	2.12:1 1.5:1	4-8:1-3 5-7:1-3	14-18:11-13 15-17:11-13	7/H
PM-DB27428	18	0.625 (15.875)	0.625 (15.875)	0.28 (7.112)	1:2.5 1:1.79	1-3:4-8 1-3:5-7	11-13:14-18 11-13:15-17	7/H
PM-DB27411	18	0.625 (15.875)	0.625 (15.875)	0.32 (8.128)	2:5 4:7	1-3:4-8 1-3:5-7	11-13:14-18 11-13:15-17	7/H
PM-DB27412	18	0.625 (15.875)	0.625 (15.875)	0.32 (8.128)	1:0.83 1:0.6	1-3:4-8 1-3:5-7	11-13:14-18 11-13:15-17	7/H
PM-DB27414	18	0.625 (15.875)	0.625 (15.875)	0.32 (8.128)	1:1 1:0.707	1-3:4-8 1-3:5-7	11-13:14-18 11-13:15-17	7/H
PM-DB27415	18	0.625 (15.875)	0.625 (15.875)	0.32 (8.128)	1.25:1 1.66:1	1-3:4-8 1-3:5-7	11-13:14-18 11-13:15-17	7/H
PM-DB27416	18	0.625 (15.875)	0.625 (15.875)	0.32 (8.128)	2.3:1 3.2:1	4-8:1-3 5-7:1-3	14-18:11-13 15-17:11-13	8/H
PM-DB27417	18	0.625 (15.875)	0.625 (15.875)	0.32 (8.128)	2.12:1 1.5:1	4-8:1-3 5-7:1-3	14-18:11-13 15-17:11-13	7/H
PM-DB27418	18	0.625 (15.875)	0.625 (15.875)	0.32 (8.128)	1:2.5 1:1.79	1-3:4-8 1-3:5-7	11-13:14-18 11-13:15-17	7/H

Single Core, Single Ratio

Part Number	Total Pins	Length inch. (mm)	Width inch. (mm)	Height inch. (mm)	Core(s) Ratio(s) Ratio (±3%)	1st Core Terminals	2nd Core Terminals	Schematic / Package
PM-DB2706	6	0.35 (8.89)	0.5 (12.7)	0.25 (6.35)	1:1	1-5:6-2	---	2/B
PM-DB2708	6	0.35 (8.89)	0.5 (12.7)	0.25 (6.35)	1:1.66	1-5:6-2	---	2/B
PM-DB2709	6	0.35 (8.89)	0.5 (12.7)	0.25 (6.35)	1:2	1-5:6-2	---	2/B
PM-DB2728	6	0.35 (8.89)	0.5 (12.7)	0.25 (6.35)	1:1.5	1-5:6-2	---	2/B
PM-DB2729	6	0.35 (8.89)	0.5 (12.7)	0.25 (6.35)	1:1.79	1-5:6-2	---	2/B
PM-DB2730	6	0.35 (8.89)	0.5 (12.7)	0.25 (6.35)	1:2.5	1-5:6-2	---	2/B
PM-DB27150	8	0.625 (15.875)	0.625 (15.875)	0.165 (4.19)	1:2.07	1-3:7-5	---	18/AF
PM-DB2759 (1)	6	0.35 (8.89)	0.5 (12.7)	0.182 (4.6228)	1:1.79	1-5:6-2	---	2/U
PM-DB2760 (1)	6	0.35 (8.89)	0.5 (12.7)	0.182 (4.6228)	1:2.5	1-5:6-2	---	2/U

(1) Operating Temperature Range from -40°C to +130°C

Single Core, Dual Ratio

Part Number	Total Pins	Length inch. (mm)	Width inch. (mm)	Height inch. (mm)	Core(s) Ratio(s) Ratio (±3%)	1st Core Terminals	2nd Core Terminals	Schematic / Package
PM-DB2701	8	0.625 (15.875)	0.625 (15.875)	0.25 (6.35)	1:1 1:0.707	1-3:4-8 1-3:5-7	---	1/A
PM-DB2701EX	8	0.4 (10.16)	0.4 (10.16)	0.26 (6.604)	1:1 1:0.707	1-3:4-8 1-3:5-7	---	1/G
PM-DB2703	8	0.625 (15.875)	0.625 (15.875)	0.25 (6.35)	1.25:1 1.66:1	1-3:4-8 1-3:5-7	---	1/A
PM-DB2704	8	0.625 (15.875)	0.625 (15.875)	0.25 (6.35)	2.3:1 3.2:1	4-8:1-3 5-7:1-3	---	4/A
PM-DB2710	8	0.625 (15.875)	0.625 (15.875)	0.25 (6.35)	1:2.12 1:1.5	1-3:4-8 1-3:5-7	---	1/A
PM-DB2725	8	0.625 (15.875)	0.625 (15.875)	0.25 (6.35)	1:2.5 1:1.79	1-3:4-8 1-3:5-7	---	1/A
PM-DB2725R	8	0.625 (15.875)	0.625 (15.875)	0.25 (6.35)	1:2.5 1:1.79	1-3:4-8 1-3:5-7	---	16/AD
PM-DB2725EX	8	0.4 (10.16)	0.4 (10.16)	0.26 (6.604)	1:2.5 1:1.79	1-3:4-8 1-3:5-7	---	1/G
PM-DB2725SX (2)	8	0.4 (10.16)	0.4 (10.16)	0.26 (6.604)	1:2.5 1:1.79	1-3:4-8 1-3:5-7	---	1/G
PM-DB2755	8	0.4 (10.16)	0.4 (10.16)	0.26 (6.604)	1:3.75 1:2.70	1-3:4-8 1-3:5-7	---	1/G
PM-DB27101	8	0.43 (10.922)	0.43 (10.922)	0.155 (3.937)	1:2.5 1:1.79	1-3:4-8 1-3:5-7	---	1/W
PM-DB2741	8	0.63 (16.002)	0.63 (16.002)	0.155 (3.937)	1:1 1:0.707	1-3:4-8 1-3:5-7	---	1/K
PM-DB2743	8	0.63 (16.002)	0.63 (16.002)	0.155 (3.937)	1.25:1 1.66:1	1-3:4-8 1-3:5-7	---	1/K
PM-DB2744	8	0.63 (16.002)	0.63 (16.002)	0.155 (3.937)	1:2.12 1:1.5	1-3:4-8 1-3:5-7	---	1/K
PM-DB2745	8	0.63 (16.002)	0.63 (16.002)	0.155 (3.937)	1:2.5 1:1.79	1-3:4-8 1-3:5-7	---	1/K

(2) Meets MIL-STD-1553 and MIL-PRF-21038 Electrical Characteristics.
X-Ray inspect for solder ball and foreign material embedded in the potting.
Wrap 3 turns minimum of leads wire on each terminal.

Isolation Transformers – Unformed Leads

Dual Core, Dual Ratio

Part Number	Total Pins	Length inch. (mm)	Width inch. (mm)	Height inch. (mm)	Core(s) Ratio(s) Ratio (±3%)	1st Core Terminals	2nd Core Terminals	Schematic / Package
PM-DB27200	16	0.93 (23.622)	0.43 (10.922)	0.155 (3.937)	1:2.5 1:1.79	1-3:16-13 1-3:15-14	5-7:12-9 5-7:11-10	6/T
PM-DB27255	16	0.93 (23.622)	0.63 (16.002)	0.155 (3.937)	1:2.5 1:1.79	1-3:16-13 1-3:15-14	5-7:12-9 5-7:11-10	6/X
PM-DB2741T	16	0.93 (23.622)	0.43 (10.922)	0.155 (3.937)	1:1 1:0.707	1-3:16-13 1-3:15-14	5-7:12-9 5-7:11-10	6/T
PM-DB2743T	16	0.93 (23.622)	0.43 (10.922)	0.155 (3.937)	1.25:1 1.66:1	1-3:16-13 1-3:15-14	5-7:12-9 5-7:11-10	6/T
PM-DB2744T	16	0.93 (23.622)	0.43 (10.922)	0.155 (3.937)	1:2.12 1:1.5	1-3:16-13 1-3:15-14	5-7:12-9 5-7:11-10	6/T
PM-DB2745T	16	0.93 (23.622)	0.43 (10.922)	0.155 (3.937)	1:2.5 1:1.79	1-3:16-13 1-3:15-14	5-7:12-9 5-7:11-10	6/T

Single Core, Dual Ratio

Part Number	Total Pins	Length inch. (mm)	Width inch. (mm)	Height inch. (mm)	Core(s) Ratio(s) Ratio (±3%)	1st Core Terminals	2nd Core Terminals	Schematic / Package
PM-DB2716	8	0.625 (15.875)	0.625 (15.875)	0.25 (6.35)	1:1 1:0.707	1-3:4-8 1-3:5-7	---	1/E
PM-DB2718	8	0.625 (15.875)	0.625 (15.875)	0.25 (6.35)	1.25:1 1.66:1	1-3:4-8 1-3:5-7	---	1/E
PM-DB2719	8	0.625 (15.875)	0.625 (15.875)	0.25 (6.35)	2.3:1 3.26:1	4-8:1-3 5-7:1-3	---	1/E
PM-DB2720	8	0.625 (15.875)	0.625 (15.875)	0.25 (6.35)	1:2.12 1:1.5	1-3:4-8 1-3:5-7	---	1/E
PM-DB2731	8	0.625 (15.875)	0.625 (15.875)	0.25 (6.35)	1:2.5 1:1.79	1-3:4-8 1-3:5-7	---	1/E
PM-DB27100	8	0.43 (10.922)	0.43 (10.922)	0.155 (3.937)	1:2.5 1:1.79	1-3:4-8 1-3:5-7	---	1/M
PM-DB2741M	8	0.43 (10.922)	0.43 (10.922)	0.155 (3.937)	1:1 1:0.707	1-3:4-8 1-3:5-7	---	1/M
PM-DB2743M	8	0.43 (10.922)	0.43 (10.922)	0.155 (3.937)	1.25:1 1.66:1	1-3:4-8 1-3:5-7	---	1/M
PM-DB2744M	8	0.43 (10.922)	0.43 (10.922)	0.155 (3.937)	1:2.12 1:1.5	1-3:4-8 1-3:5-7	---	1/M
PM-DB2745M	8	0.43 (10.922)	0.43 (10.922)	0.155 (3.937)	1:2.5 1:1.79	1-3:4-8 1-3:5-7	---	1/M
PM-DB2741N	8	0.63 (16.002)	0.63 (16.002)	0.155 (3.937)	1:1 1:0.707	1-3:4-8 1-3:5-7	---	1/N

Part Number	Total Pins	Length inch. (mm)	Width inch. (mm)	Height inch. (mm)	Core(s) Ratio(s) Ratio (±3%)	1st Core Terminals	2nd Core Terminals	Schematic / Package
PM-DB2743N	8	0.63 (16.002)	0.63 (16.002)	0.155 (3.937)	1.25:1 1.66:1	1-3:4-8 1-3:5-7	---	1/N
PM-DB2744N	8	0.63 (16.002)	0.63 (16.002)	0.155 (3.937)	1:2.12 1:1.5	1-3:4-8 1-3:5-7	---	1/N
PM-DB2745N	8	0.63 (16.002)	0.63 (16.002)	0.155 (3.937)	1:2.5 1:1.79	1-3:4-8 1-3:5-7	---	1/N

Coupling Transformers – Surface Mount

Dual Core, Single Ratio

Part Number	Total Pins	Length inch. (mm)	Width inch. (mm)	Height inch. (mm)	Core(s) Ratio(s) Ratio (±3%)	1st Core Terminals	2nd Core Terminals	Schematic / Package
PM-DB2764	10	0.4 (10.16)	0.4 (10.16)	0.32 (8.128)	1.41:1	1-2:10-9	4-5:7-6	12/AA

Dual Core, Dual Ratio

Part Number	Total Pins	Length inch. (mm)	Width inch. (mm)	Height inch. (mm)	Core(s) Ratio(s) Ratio (±3%)	1st Core Terminals	2nd Core Terminals	Schematic / Package
PM-DB27432	16	0.625 (15.87)	0.625 (15.87)	0.295 (7.493)	1.4:1 2:1	1-3:4-8 1-3:5-7	11-13:14-18 11-13:15-17	7/AG
PM-DB2742S	16	0.93 (23.622)	0.63 (16.002)	0.155 (3.937)	1.4:1 2:1	1-3:16-13 1-3:15-14	5-7:12-9 5-7:11-10	6/S

Single Core, Dual Ratio

Part Number	Total Pins	Length inch. (mm)	Width inch. (mm)	Height inch. (mm)	Core(s) Ratio(s) Ratio (±3%)	1st Core Terminals	2nd Core Terminals	Schematic / Package
PM-DB2712	8	0.625 (15.875)	0.625 (15.875)	0.254 (6.4516)	1.4:1 2.1:1	1-3:4-8 1-3:5-7	---	1/D
PM-DB2742L	8	0.63 (16.002)	0.63 (16.002)	0.155 (3.937)	1.4:1 2:1	1-3:4-8 1-3:5-7	---	1/L

Coupling Transformers – Through Hole

Dual Core, Dual Ratio

Part Number	Total Pins	Length inch. (mm)	Width inch. (mm)	Height inch. (mm)	Core(s) Ratio(s) Ratio (±3%)	1st Core Terminals	2nd Core Terminals	Schematic / Package
PM-DB2742D	16	0.93 (23.622)	0.63 (16.002)	0.155 (3.937)	1.4:1 2:1	1-3:16-13 1-3:15-14	5-7:12-9 5-7:11-10	6/R
PM-DB27403	18	0.625 (15.875)	0.625 (15.875)	0.25 (6.35)	1.4:1 2:1	1-3:4-8 1-3:5-7	11-13:14-18 11-13:15-17	7/H
PM-DB27423	18	0.625 (15.875)	0.625 (15.875)	0.28 (7.112)	1.4:1 2:1	1-3:4-8 1-3:5-7	11-13:14-18 11-13:15-17	7/H
PM-DB27413	18	0.625 (15.875)	0.625 (15.875)	0.32 (8.128)	1.4:1 2:1	1-3:4-8 1-3:5-7	11-13:14-18 11-13:15-17	7/H

Single Core, Single Ratio

Part Number	Total Pins	Length inch. (mm)	Width inch. (mm)	Height inch. (mm)	Core(s) Ratio(s) Ratio (±3%)	1st Core Terminals	2nd Core Terminals	Schematic / Package
PM-DB2705	4	0.35 (8.89)	0.5 (12.7)	0.25 (6.35)	1:1.41	1-2:4-3	---	3/C
PM-DB2705EX	4	0.35 (8.89)	0.5 (12.7)	0.25 (6.35)	1:1.41	1-2:3-4	---	5/F
PM-DB2707	6	0.35 (8.89)	0.5 (12.7)	0.25 (6.35)	1:1.41	1-5:6-2	---	2/B

Single Core, Dual Ratio

Part Number	Total Pins	Length inch. (mm)	Width inch. (mm)	Height inch. (mm)	Core(s) Ratio(s) Ratio (±3%)	1st Core Terminals	2nd Core Terminals	Schematic / Package
PM-DB2702	8	0.625 (15.875)	0.625 (15.875)	0.25 (6.35)	1.4:1 2:1	1-3:4-8 1-3:5-7	---	1/A
PM-DB2742	8	0.63 (16.002)	0.63 (16.002)	0.155 (3.937)	1.4:1 2:1	1-3:4-8 1-3:5-7	---	1/K

Coupling Transformers – Unformed Leads

Dual Core, Dual Ratio

Part Number	Total Pins	Length inch. (mm)	Width inch. (mm)	Height inch. (mm)	Core(s) Ratio(s) Ratio (±3%)	1st Core Terminals	2nd Core Terminals	Schematic / Package
PM-DB2742T	16	0.93 (23.622)	0.43 (10.922)	0.155 (3.937)	1.4:1 2:1	1-3:16-13 1-3:15-14	5-7:12-9 5-7:11-10	6/T

Single Core, Dual Ratio

Part Number	Total Pins	Length inch. (mm)	Width inch. (mm)	Height inch. (mm)	Core(s) Ratio(s) Ratio (±3%)	1st Core Terminals	2nd Core Terminals	Schematic / Package
PM-DB2717	8	0.625 (15.875)	0.625 (15.875)	0.25 (6.35)	1.41:1 2:1	1-3:4-8 1-3:5-7	---	1/E
PM-DB2742M	8	0.43 (10.922)	0.43 (10.922)	0.155 (3.937)	1.4:1 2:1	1-3:4-8 1-3:5-7	---	1/M
PM-DB2742N	8	0.63 (16.002)	0.63 (16.002)	0.155 (3.937)	1.4:1 2:1	1-3:4-8 1-3:5-7	---	1/N

SCHEMATICS

SCHEMATIC"1"

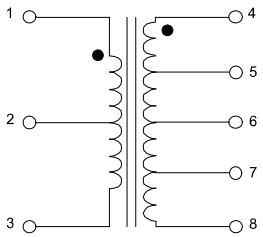

SCHEMATIC"2"

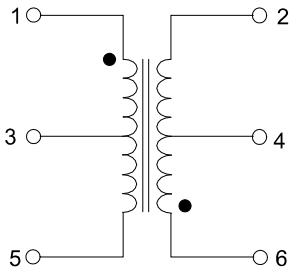

SCHEMATIC"3"

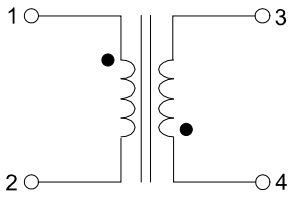

SCHEMATIC"4"

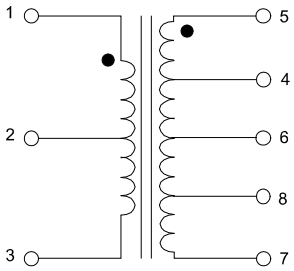

SCHEMATIC"5"

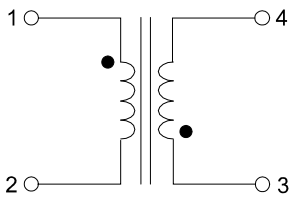

SCHEMATIC"6"

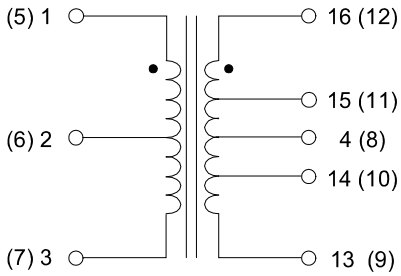

SCHEMATIC"7"

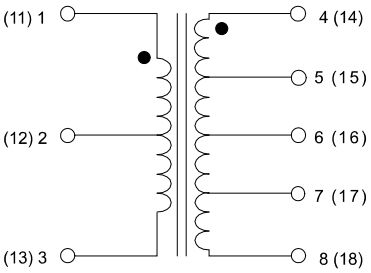

SCHEMATIC"8"

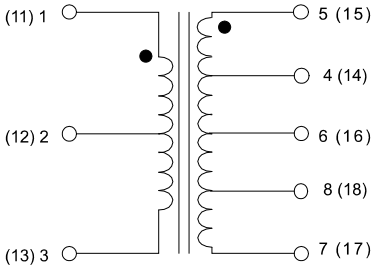

SCHEMATIC"9"

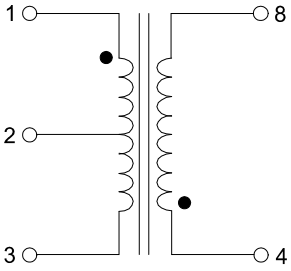

SCHEMATIC"10"

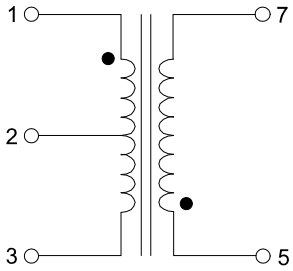

SCHEMATIC"11"

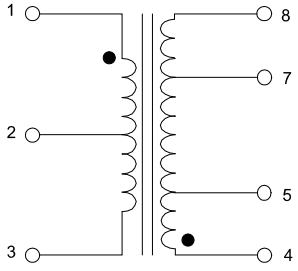

Specifications subject to change without notice.

SCHEMATIC"12"

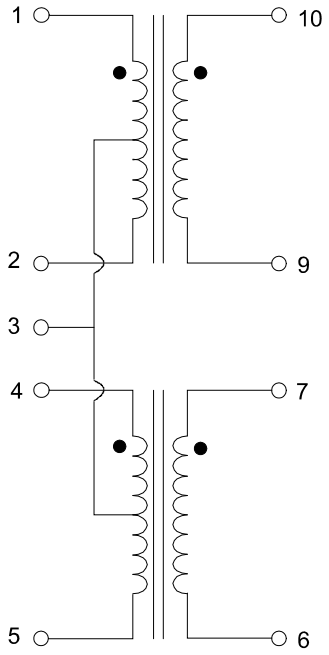

SCHEMATIC"13"

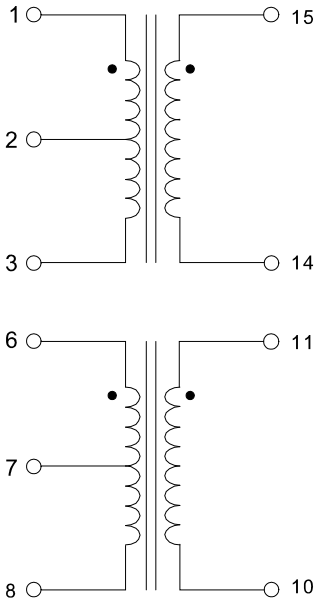

SCHEMATIC"14"

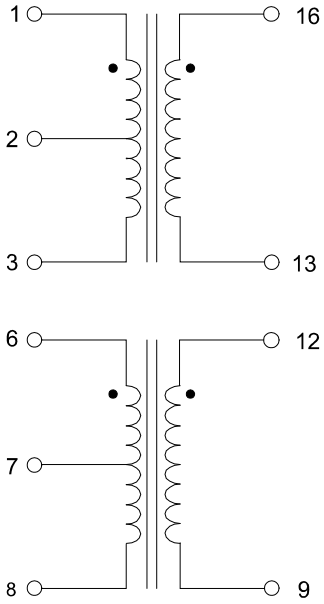

SCHEMATIC"15"

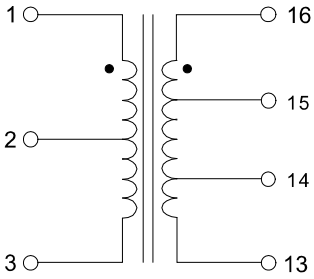

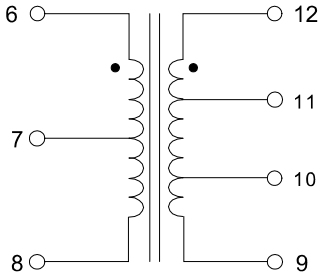

SCHEMATIC"16"

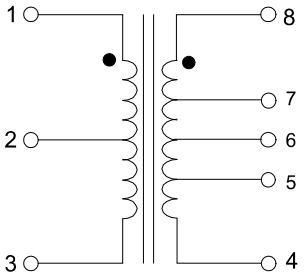

SCHEMATIC"17"

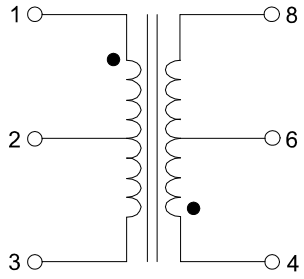

SCHEMATIC"18"

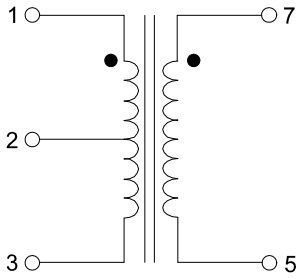

Specifications subject to change without notice.

SCHEMATIC "19"

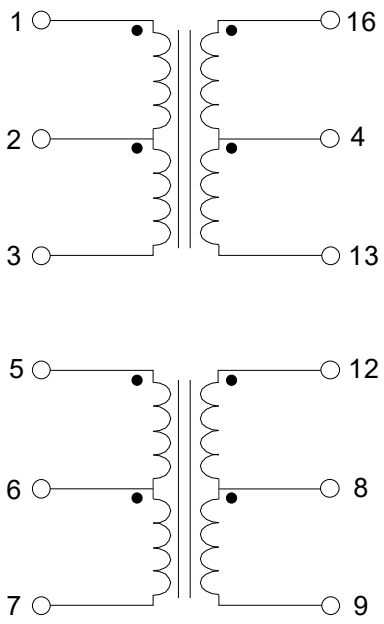

Specifications subject to change without notice.

MIL-STD-1553 / MIL-PRF-21038
DATABUS INTERFACE TRANSFORMERS
ADD "+" ON P/N FOR RoHS COMPLIANCE

FIGURE #A

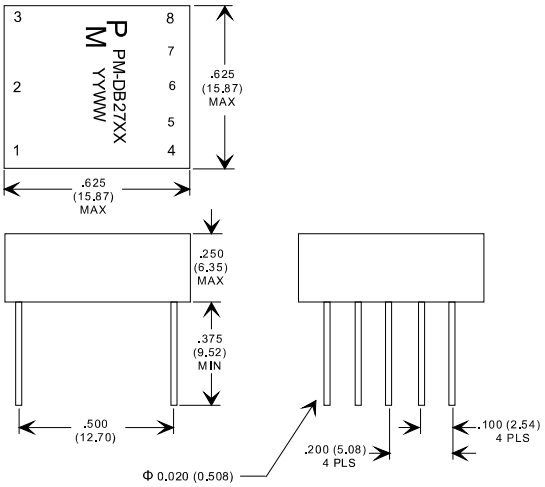

FIGURE #B

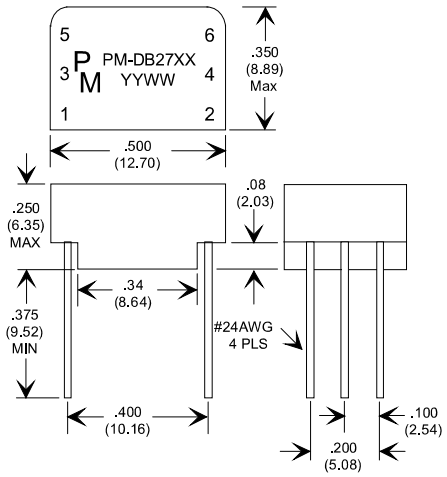

FIGURE #C

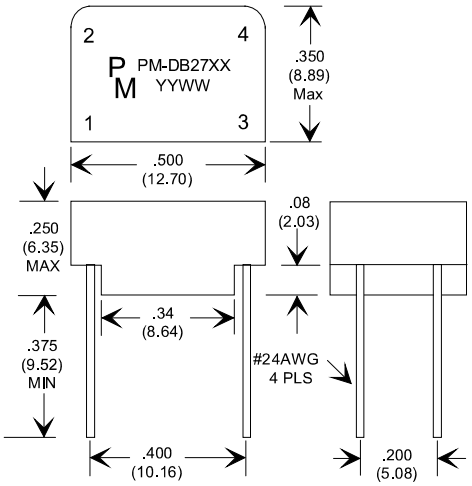

FIGURE #D

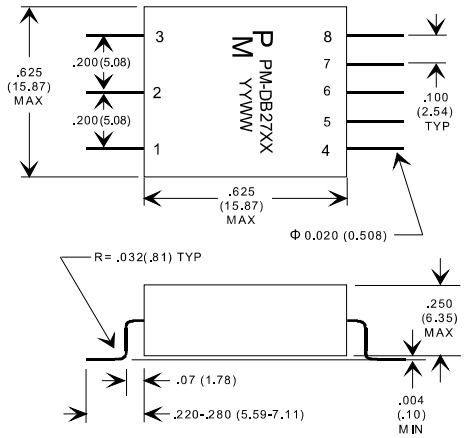

FIGURE #E

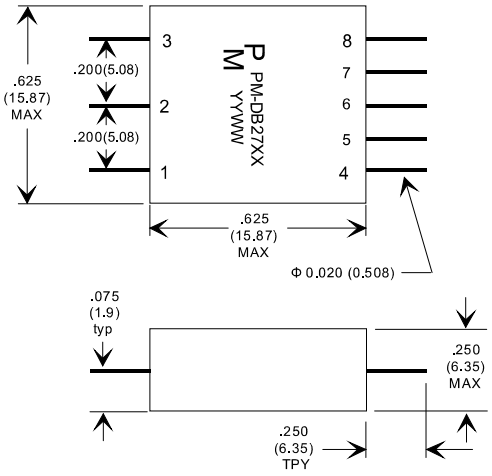

FIGURE #F

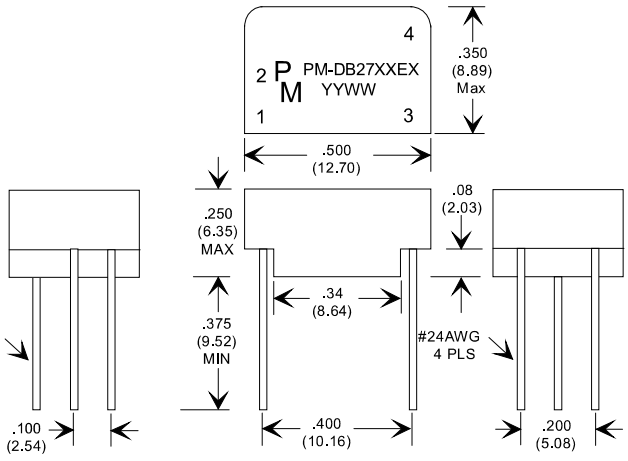

Specifications subject to change without notice.

MIL-STD-1553 / MIL-PRF-21038
DATABUS INTERFACE TRANSFORMERS
ADD "+" ON P/N FOR RoHS COMPLIANCE

FIGURE #G

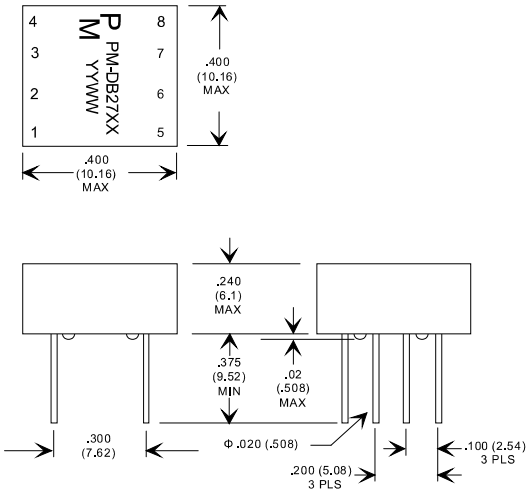

FIGURE #H

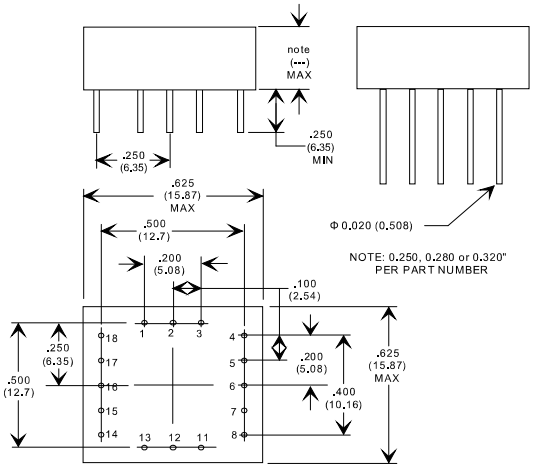

FIGURE #K

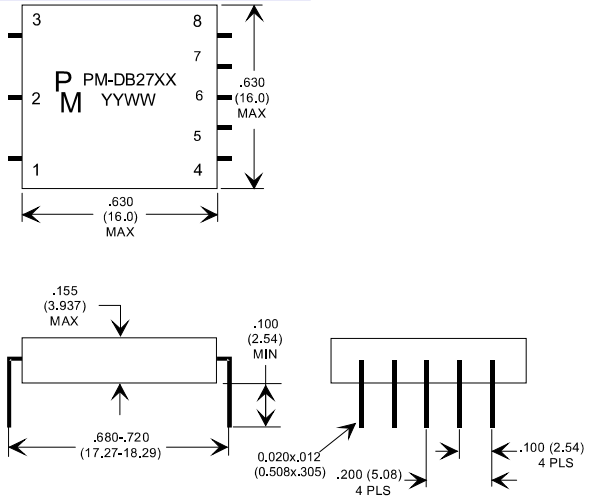

FIGURE #L

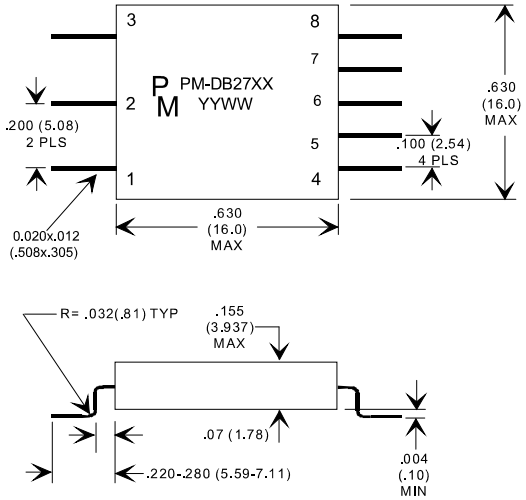

FIGURE #M

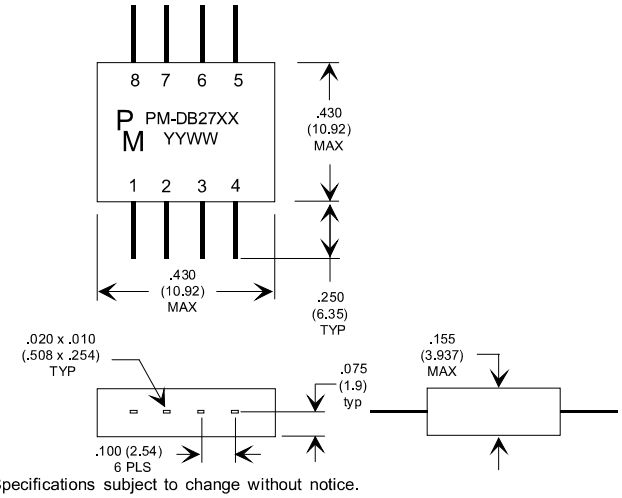

FIGURE #N

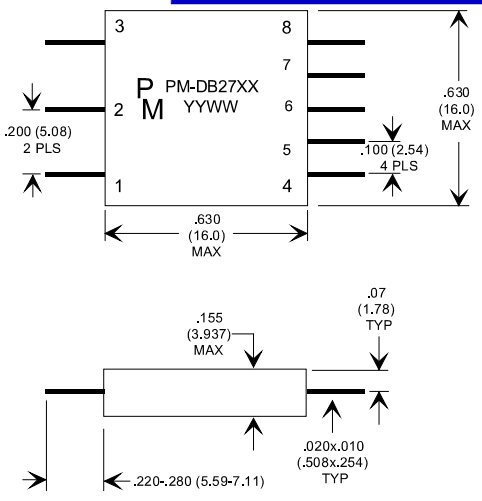

Specifications subject to change without notice.

MIL-STD-1553 / MIL-PRF-21038
DATABUS INTERFACE TRANSFORMERS
ADD "+" ON P/N FOR RoHS COMPLIANCE

FIGURE # R

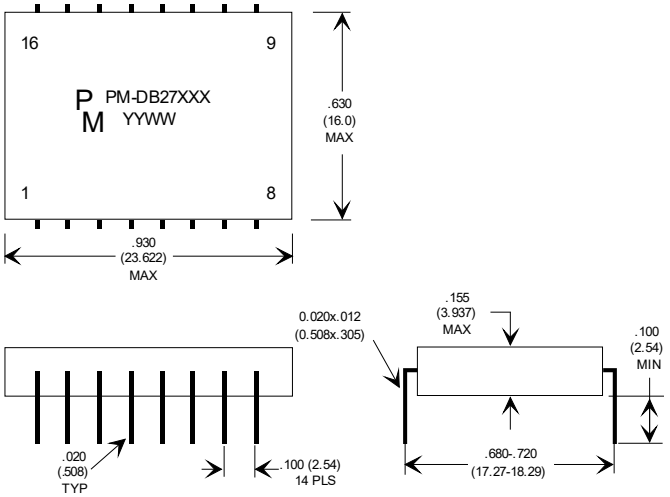

FIGURE # S

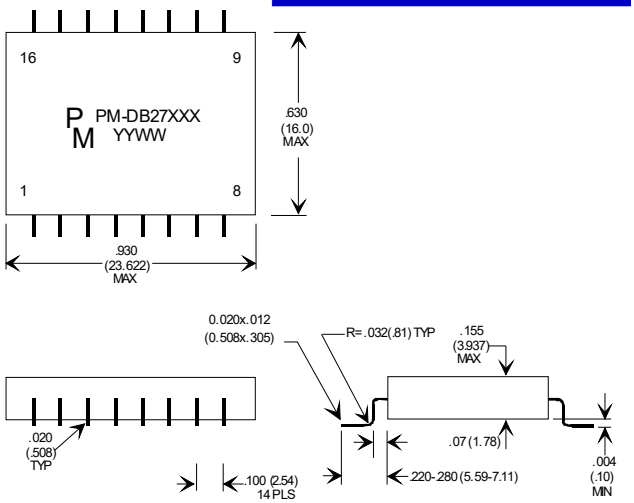

FIGURE # T

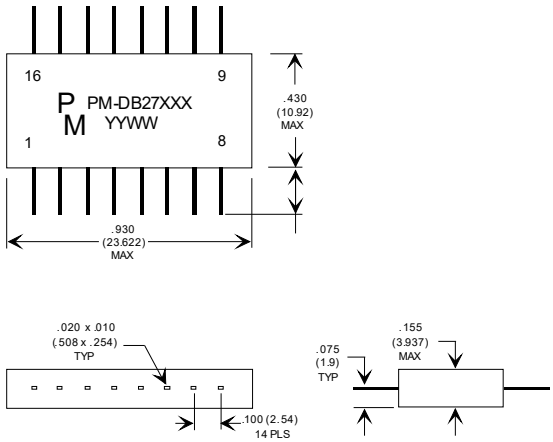

FIGURE # U

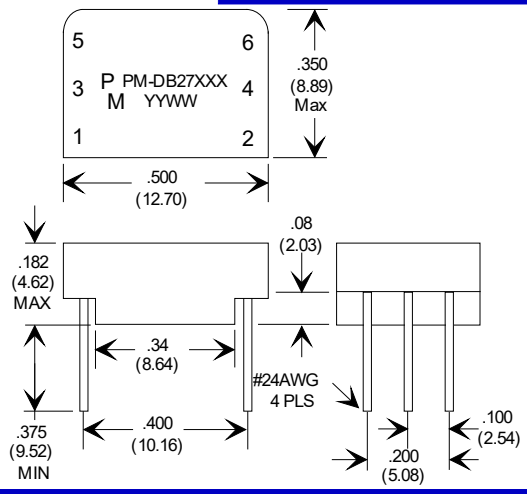

FIGURE # V

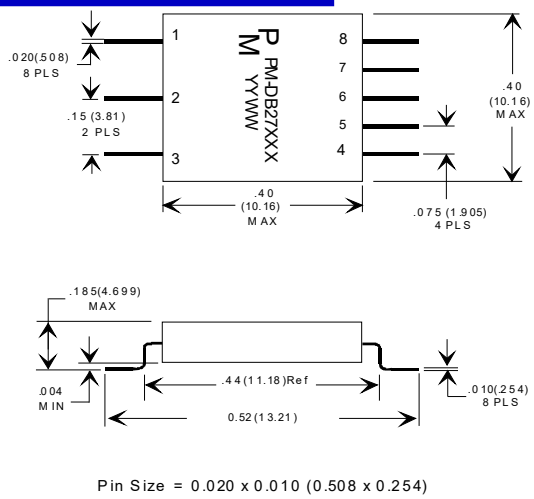

Pin Size = 0.020 x 0.010 (0.508 x 0.254)

FIGURE # W

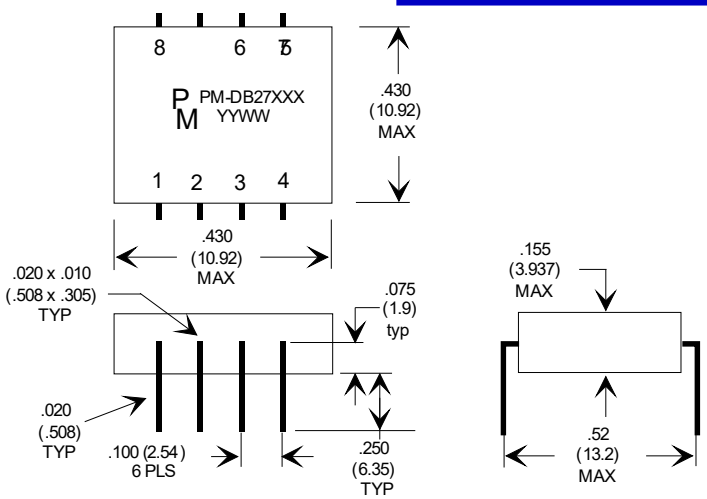

Specifications subject to change without notice.

FIGURE # X

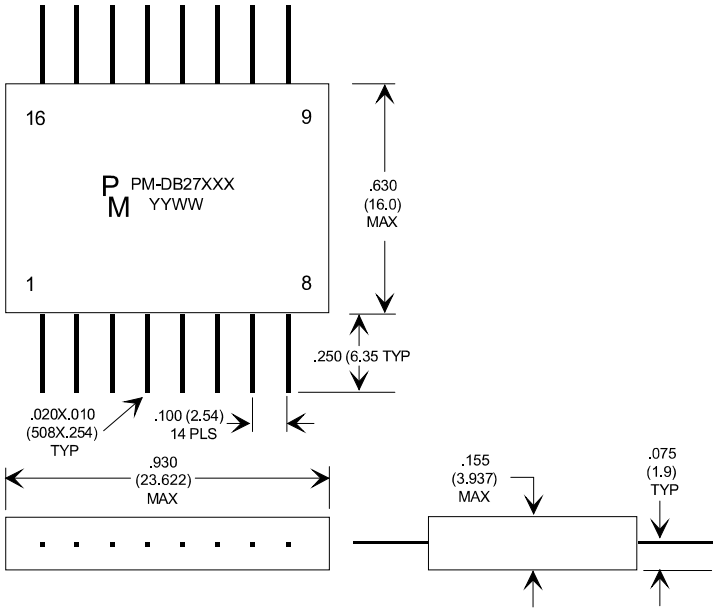

FIGURE # AA

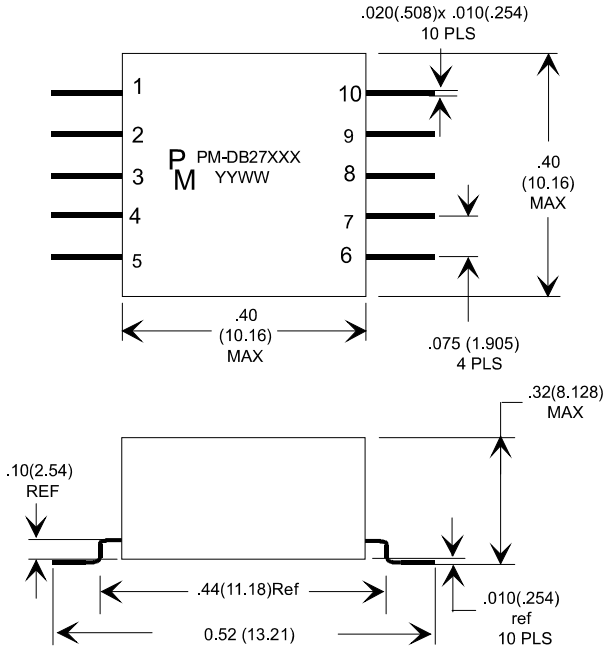

FIGURE # AB

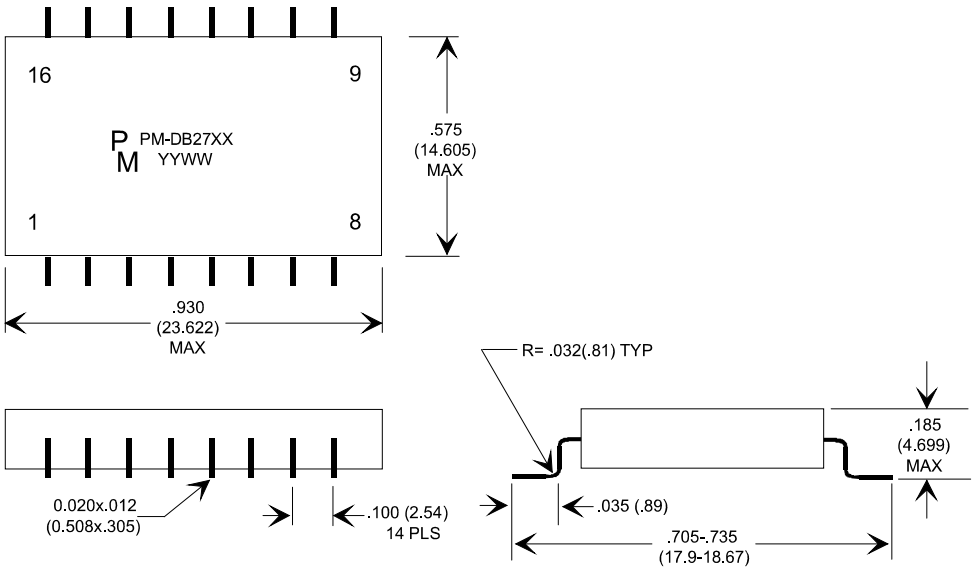

Specifications subject to change without notice.

FIGURE # AC

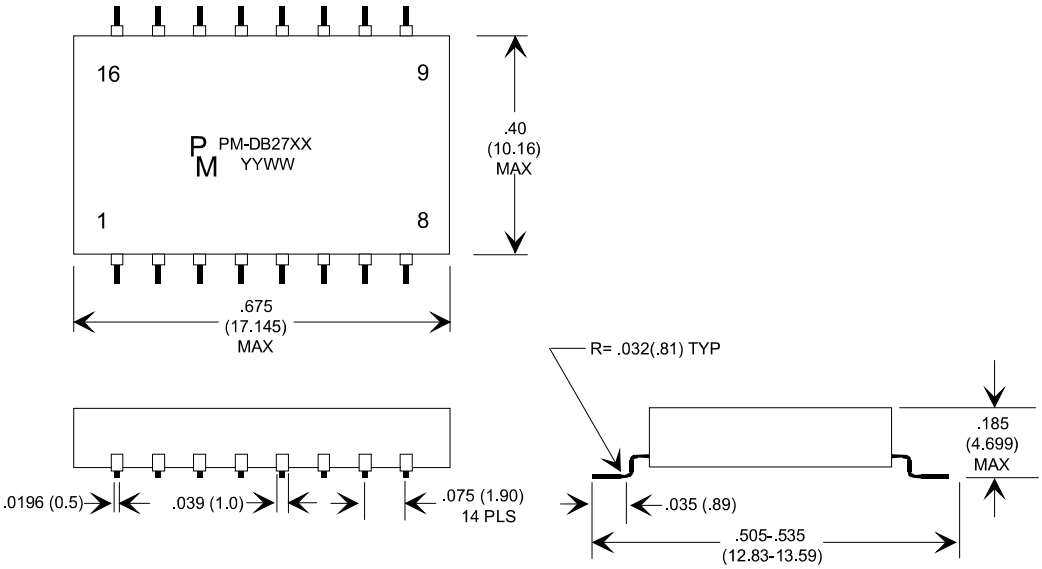

FIGURE # AD

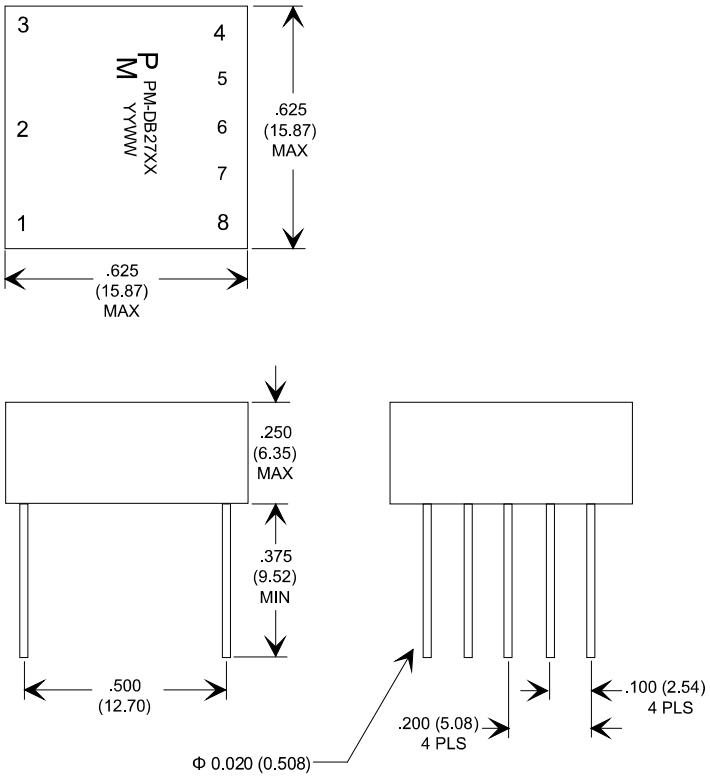

Specifications subject to change without notice.

FIGURE # AE

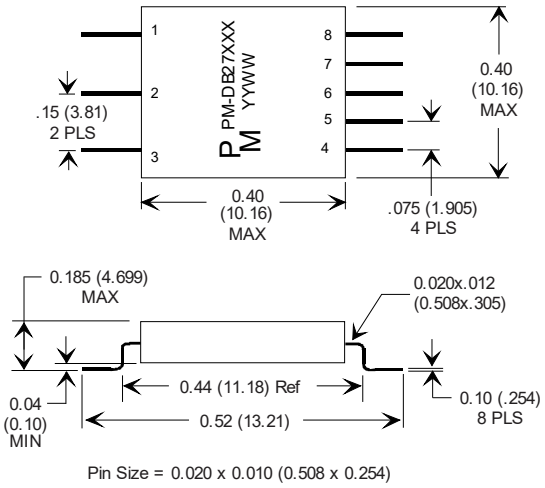

FIGURE # AF

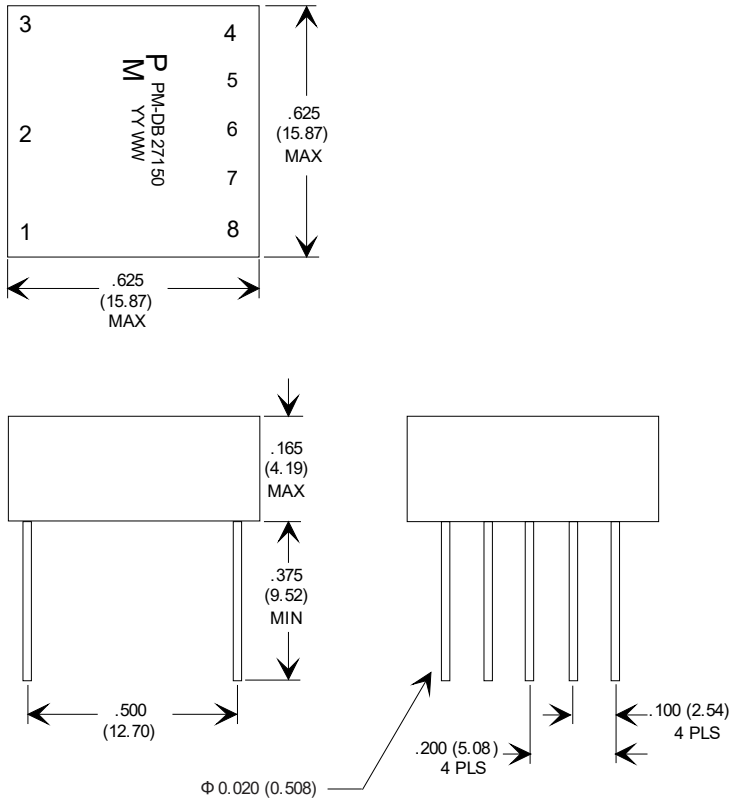

Specifications subject to change without notice

FIGURE # AG

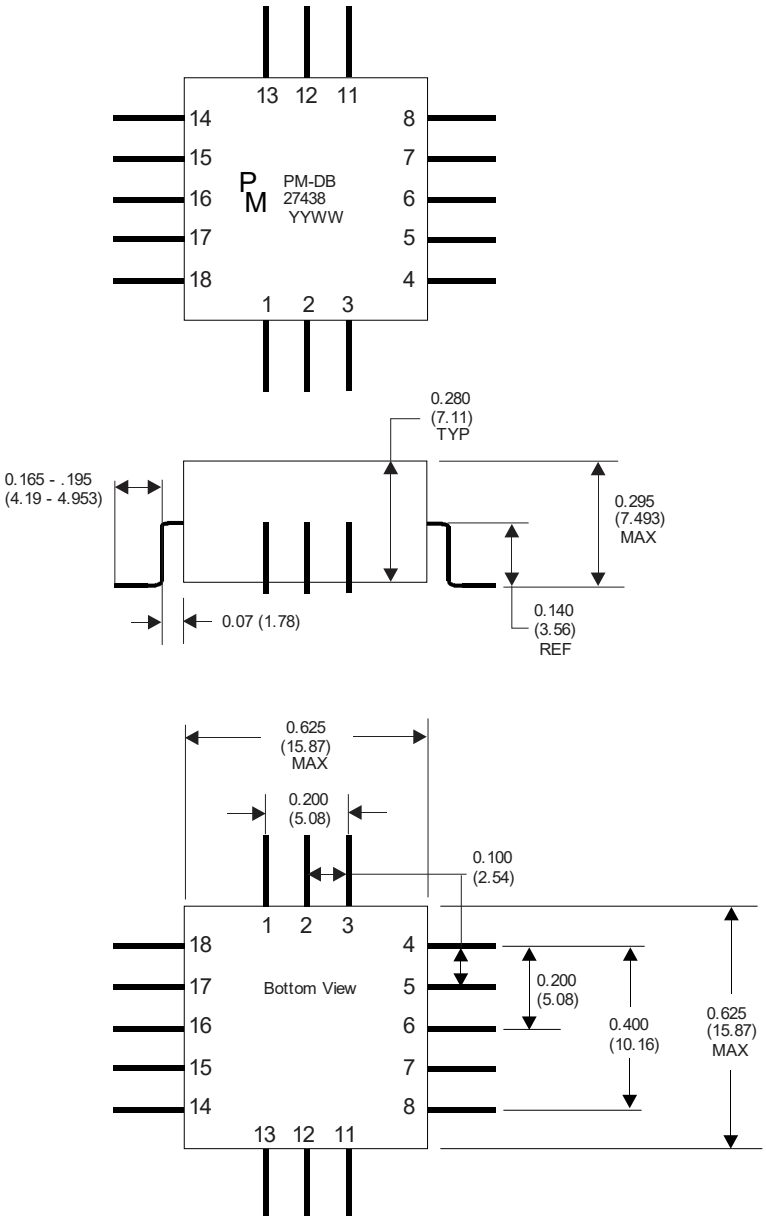

Specifications subject to change without notice

FIGURE # AH

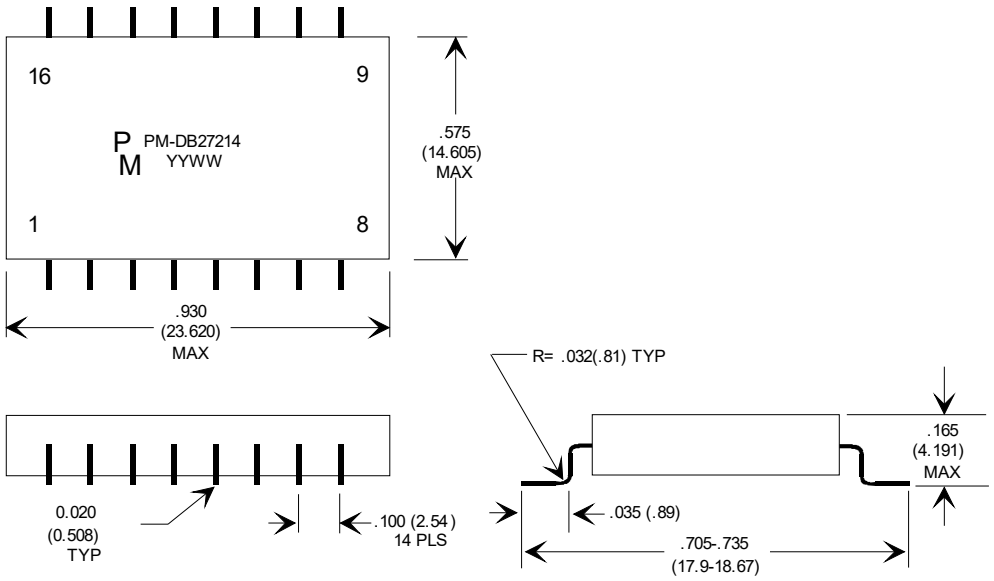

Specifications subject to change without notice

Cross Reference Listing

PREMIER PART#	X-REF NAME/PART#
PM-DB2701	B-2202 B-3221
PM-DB2702	B-2203 B-3222
PM-DB2703	B-2204 B-3223
PM-DB2704	B-2205
PM-DB2705	B-2206
PM-DB2706	B-2207
PM-DB2707	B-2208
PM-DB2708	B-2209
PM-DB2709	B-2210
PM-DB2710	B-2385 B-3224
PM-DB2711	B-2386
PM-DB2712	B-2387
PM-DB2713	B-2388
PM-DB2714	B-2389
PM-DB2715	B-2390
PM-DB2716	B-2342
PM-DB2717	B-2343 M21038/27-17
PM-DB2718	B-2344
PM-DB2719	B-2345
PM-DB2720	B-2391
PM-DB2725	B-3225 B-3226
PM-DB2725R	B-3067
PM-DB2727	B-3227
PM-DB2728	B-3228
PM-DB2729	B-3229
PM-DB2730	B-3230
PM-DB2731	B-3231
PM-DB2775	DSS-3333
PM-DB2776	DSS-3305
PM-DB2777	DSS-3312
PM-DB2779	DSS-3330
PM-DB2786S	DSS-1005-1
PM-DB27211	DSS-1005
PM-DB27214	DSS-1630

PREMIER PART#	X-REF NAME/PART#
PM-DB2761	TSM-2033
PM-DB2762	TSM-2005
PM-DB2763	TSM-2012
PM-DB2764	TSM-2015
PM-DB2765	TSM-2233
PM-DB2771	TSM-2230
PM-DB2766	TSM-2205
PM-DB2767	TSM-2212
PM-DB2768	TSM-2215
PM-DB2792S	MLP-2233
PM-DB2794S	MLP-2230
PM-DB2796S	MLP-2030
PM-DB2745L	LPB-5015
PM-DB2741L	LPB-5003
PM-DB2742L	LPB-5002
PM-DB2743L	LPB-5004
PM-DB2744L	LPB-5006
PM-DB2745M	LPB-5014
PM-DB2741M	LPB-5010
PM-DB2742M	LPB-5009
PM-DB2743M	LPB-5011
PM-DB2744M	LPB-5013
PM-DB2742D	TLP-1215
PM-DB2743D	TLP-1212
PM-DB2745D	TLP-1205
PM-DB2746D	B-3216-3
PM-DB2742S	TLP-1015
PM-DB2743S	TLP-1012
PM-DB2745S	TLP-1005
PM-DB2742T	TLP-1115
PM-DB2743T	TLP-1112
PM-DB2745T	TLP-1105

Cross Reference Listing (ctd.)

PREMIER PART#	X-REF NAME/PART#
PM-DB2745L	LPB-5015
PM-DB27150	LVB-4230
PM-DB27432	TST-9112
PM-DB27437	TST-9117
PM-DB27438	TST-9017

Revision History

Revision	Date	Description of Change
Rev. B	12/16/08	Add PM-DB2785S, PM-DB2790S, PM-DB2791S, PM-DB2795S, PM-DB2798S, PM-DB27100, PM-DB27101, PM-DB27200, PM-DB27255
Rev. C	11/12/10	Add PM-DB2761, PM-DB2762, PM-DB2763, PM-DB3764, PM-DB2765, PM-DB2766, PM-DB2767 & PM-DB2768 part numbers, schematic and physical dimensions. Updated cross ref. list. Reformatted various tables.
Rev. D	04/21/11	Typographical error in physical dimensions for Figure #V corrected.
Rev. E	09/09/11	Repositioned dimension of "S" package closer to the location of the measurement.
Rev. F	11/19/12	Clarified peak body temperature for RoHS and Non-RoHS parts. Add PM-DB27421, PM-DB27422, PM-DB27423, PM-DB27424, PM-DB27425, PM-DB27426, PM-DB27427, PM-DB27428, PM-DB2750, PM-DB2751, PM-DB2752, PM-DB2753, PM-DB2754, PM-DB2769, PM-DB2770, PM-DB2775, PM-DB2776, PM-DB2777. Add Schematics 13, 14, 15. Remove Figure #Y, Add Figures #AA, #AB, #AC
Rev. G	04/05/13	Add PM-DB2725R, PM-DB2792S Schematic #16, Figure #AD
Rev. H	06/24/13	Add PM-DB2756 to page 7.
Rev. J	02/14/14	Corrected typographical errors on package Figures #D, #E, #H, #K, #L, #R, #S, #T, #W, #X, #AB, #AC
Rev. K	06/03/14	Re-organized transformer data presentation into new format. Other than organization, no changes have been made from previous version.
Rev. L	07/24/14	Correct typo in PM-DB2725EX transformer ratio.
Rev. M	03/6/15	Add PM-DB2725R and PM-DB2792S (missing from Rev. L). Correct terminal ratios on PM-DB2741S, PM-DB2743S, PM-DB2744S and PM-DB2745S.
Rev. N	05/7/15	Add PM-DB2779 and competitor cross reference.
Rev. O	08/19/15	Correct package reference for PM-DB2705EX from package “C” to package “F”. Add PM-DB2793S. Correct typo in Cross Reference Listing table.
Rev. P	05/09/17	Add PM-DB2799S.
Rev. Q	05/22/17	Change PM-DB2799S part number to PM-DB27501S. Add PM-DB27503S.
Rev. R	09/12/17	Add PM-DB2771 and PM-DB2794S. Update Cross Reference Guide.
Rev. S	06/07/18	Update AE package thickness from 3.7mm to 4.699mm. Add PM-DB27438. Add PM-DB27150. Update Cross Reference Guide.
Rev. T	10/04/18	Fix typo in PM-DB2770 ratio, from 1:2.69 to 1:2.65.
Rev. U	12/11/18	Fix text truncation in header. “+” indicator for RoHS Compliance missing.
Rev. V	06/19/19	Change transformer ratio of PM-DB2794S from 1:2.65 to 1:2.07. Add PM-DB2796S (new 1:2.65 ratio). Update Cross Reference Listing table.

Revision History (ctd.)

Revision	Date	Description of Change
Rev. W	07/07/2020	Add the following parts: PM-DB27432, PM-DB27437, PM-DB2725SX, PM-DB2786S, PM-DB27211, PM-DB27214. Add new package drawing “FIGURE # AH”. Add missing dimension to FIGURE AE. Update the Cross Reference Listing Table.
Rev. X	08/14/2024	Remove the following duplicate part numbers: PM-DB2721 (same as PM-DB2701) PM-DB2722 (same as PM-DB2702) PM-DB2723 (same as PM-DB2703) PM-DB2724 (same as PM-DB2710) PM-DB2726 (same as PM-DB2725)
Rev. Y	10/07/2024	Add the following part: PM-DB2746D. Update Cross Reference Table. Add SCHEMATIC “19”. Correct typos. in package drawings R and S.