Honeywell





MICRO SWITCH™
Snap-in Panel Mount Basic Switches
DM | DP Series

Datasheet

MICRO SWITCH™ DM | DP Series
Snap-in Panel Mount Basic Switches

MICRO SWITCH™ DM/DP basic switches are designed for a variety of applications, and known for their compact, lightweight design and accurate repeatability. The DM/DP Series is a special application precision switch that can be used in a variety of applications, including appliance door lights and door interlocks, as well as service panels.

The DM/DP Series snap-action switches have momentary, push-pull, and pull-to-cheat configurations. The quick-connect terminals and snap-in, panel-mount housings provide easy installation. In addition to the standard quick-connect terminals (4,78 mm x 0,51 mm [0.188 in x 0.020 in]), larger 6,35 mm x 0,81 mm [0.25 in x 0.032 in] quick-connect terminals can be provided.

What makes our switches better?

- The right switch at the right cost for the product performance
- Series meets industries' most common standard applications eliminating need for product modifications
- Repeatable and consistent performance for up to one million lifecycles
- DP Series meets UL 508 requirements with extended electrical endurance for industrial applications



INDUSTRY STANDARD
VALUE • RELIABLE

Features and Benefits

EASY INSTALLATION

Attractive, rugged **snap-in design** allows these switches to be easily installed. Quick-connect terminals reduce installation time.

VARIETY OF CIRCUITRIES AND OPERATING ACTIONS

DM and DP Series switches offer a choice of **momentary, push-pull, or pull-to-cheat** actions to meet equipment requirements. Circuitry options of **SPDT, DPDT, and SPNO** fit a number of applications.

Options for low energy circuits

LONG LIFE

With a mechanical life of up to **1,000,000 operations**, DM and DP Series switches deliver repeatable and consistent performance.

UL 508 for industrial control equipment

WIDE OPERATING TEMPERATURE RANGE

DM and DP Series operate from **-37 °C to 82 °C [-35 °F to 180 °F]** to meet many different environmental requirements.

EASILY CONTROLS LOW-VOLTAGE DC APPLICATIONS

Switches available with a choice of **silver or gold-alloy contacts** to handle a variety of electrical load requirements.

MEETS UL 508

DP Series meets Industrial Control Equipment's (**UL508**) requirements with extended electrical endurance of 100,000 operations for long-life applications.

NORTH AMERICAN APPROVALS

DP: UL recognized file #E22779, CSA certified file #LR4442
DM: UL recognized file #E12252, CSA certified file #LR4442

Potential Applications



APPLIANCE DOOR LIGHTS

Used in turning lights “on” in refrigerators and freezers when the door is opened



DOOR INTERLOCKS

Found as a door interlock on residential HVAC equipment and service panels to interrupt power when door access panels are opened



INDICATOR CIRCUITS

Often used for general purposes to turn lights “on” or “off” when doors and/or panels are opened

MICRO SWITCH™ Snap-in Panel Mount Basic Switches

Table 1. Specifications

Characteristic	Parameter
Description	snap-in panel mount basic switch
Actuators	momentary action push-pull push momentary, pull-to-cheat
Terminations	quick connect, 4,78 mm x 0,51 mm [0.188 in x 0.020 in]
Amp rating	10 A, 16 A
Operating temperature	-37 °C to 82 °C [-35 °F to 180 °F]
Operating force	4,17 N [15 oz] max.
Mechanical life	1 million operations, 95 % survival
Circuitry	SPNO, SPDT, DPDT
Voltage	125 Vac, 250 Vac, 277 Vac
Approvals	UL, CSA

Table 2. Electrical Ratings

Series	Electrical rating
DM	UL and CSA rating: 10 A, 1/2 HP, 125, 250 or 277 Vac
DP	UL standard 508, 14 A, 3/4 HP, 125, 250 Vac; Pilot Duty: 150 V A – 125, 250 Vac; 16 A, 125, 250, 277 Vac; 3/4 HP, 125, 250 Vac

MOMENTARY ACTION

Momentary action switches are available in a choice of concave, convex, or bullet nose plunger styles.

Concave plunger

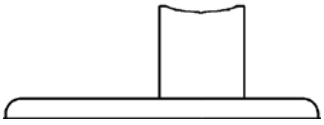

Convex plunger

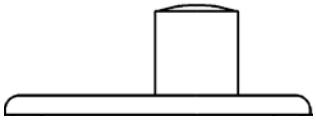

Bullet-nose plunger

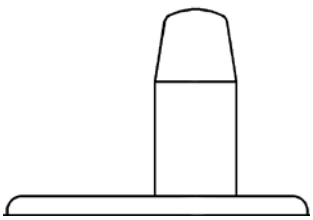

Pull-to-cheat plunger

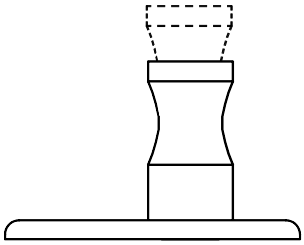

PUSH-PULL

When plunger is depressed, it remains in the depressed position and maintains circuit transfer. Switch contacts return to the previous position when the plunger is pulled to the original extended position.

PULL-TO-CHEAT

Pull-to-cheat operates normally as a momentary action switch. However, by pulling the plunger beyond the normal free position, a maintained-on position is achieved.

POSSIBLE VARIATIONS

In addition to the standard quick-connect 4,78 mm x 0,51 mm [0.188 in x 0.020 in] terminals, 6,35 mm x 0,81 mm [0.25 in x 0.032 in] terminals can be provided. The quick-connect terminals can be provided with terminals formed at different angles. DM plungers and faceplates are available in combinations of white, black, gray, or red.

DM SERIES ORDER GUIDE

	1DM Series	1DM Series	1DM Series
			
Free position	22,4 mm [0.88 in]	11,4 mm [0.45 in]	11,4 mm [0.45 in]
Operating position	19,1 mm ±1,5 mm [0.750 in ±0.06 in]	-	9,02 mm ±1,5 mm [0.355 in ±0.06 in]
Overtravel	9,53 mm [0.375 in]	3,05 mm [0.120 in]	3,05 mm [0.12 in]
Operating force	4,17 N [15 oz]	4,17 N [15 oz]	4,17 N [15 oz]
Release force	0,83 N [3 oz]	0,83 N [3 oz]	0,83 N [3 oz]

Action	Circuitry	Plunger type	Plunger color	Faceplate color				
Momentary	SPDT	Bullet nose	White	White		**1DM1**		
Momentary	SPNC	Bullet nose	White	White		**1DM2**		
Momentary	SPNO	Bullet nose	White	White		**1DM3**		
Momentary	SPDT	Concave	Black	Gray			**1DM18**	
Momentary	SPDT	Convex	White	White				**1DM21**

	DM301 Series	2DM Series	DM401 Series
			
Free position	24,1 mm [0.95 in]	11,4 mm [0.45 in]	17,8 mm [0.70 in]
Operating position	-	-	-
Overtravel	15,9 mm [0.625 in]	3,05 mm [0.12 in]	13,2 mm [0.52 in]
Operating force	-	6,67 N [24 oz]	4,17 N [15 oz]
Release force	-	1,67 N [6 oz]	0,83 N [3 oz]

Action	Circuitry	Plunger type	Plunger color	Faceplate color				
Push-Pull	SPDT	Finger grip	Black	Gray		**1DM301**		
Push-Pull	DPDT	Finger grip	Black	Gray		**2DM301**		
Momentary	DPDT	Concave	Red	Gray			**2DM6**	
Pull-to-Cheat	SPDT	Finger grip	White	White				**1DM401****

** Extended position 23,6 mm (.930 in. max.)

MICRO SWITCH™ Snap-in Panel Mount Basic Switches

DM SERIES ORDER GUIDE

	2DM Series	DM409 Series
		
Free position	22,4 mm [0.88 in]	21,6 mm [0.85 in]
Operating position	19,6 mm ±1,0 mm [0.770 in ±0.040 in]	18,9 mm ±1,3 mm [0.745 in ±0.050 in]
Overtravel	10,2 mm [0.40 in]	15,0 mm [0.59 in]
Operating force	6,67 N [24 oz]	6,67 N [24 oz]
Release force	1,67 N [6 oz]	-

Action	Circuitry	Plunger type	Plunger color	Faceplate color			
Momentary	DPDT	Bullet nose	Black	Black		**2DM1**	
Pull-to-Cheat	DPDT	Finger grip	Black	Black			**2DM409**

* Latch position 16,9 mm ± 0,76 mm (.665 in. ± .030 in.)

DP SERIES ORDER GUIDE

	DP Series	DP Series
		
Free position	22,4 mm [0.88 in]	31,52 mm [1.242 in]
Operating position	15,1 mm ±1,5 mm [0.595 in ±0.06 in]	28,22 mm ±1,5 mm [1.112 in ±0.06 in]
Overtravel	9,53 mm [0.375 in]	4,44 mm [0.175 in]
Operating force	4,45 N [16 oz]	8,34 N [30 oz]
Release force	0.83 N [3 oz]	0.83 N [3 oz]

Action	Circuitry	Plunger type	Plunger color	Faceplate color			
Momentary	SPNO	Bullet nose	White	White		**1DP5**	
Momentary	SPNO	Finger grip	White	White			**1DP8**

1DM1, 1DM2, 1DM3 DIMENSIONS

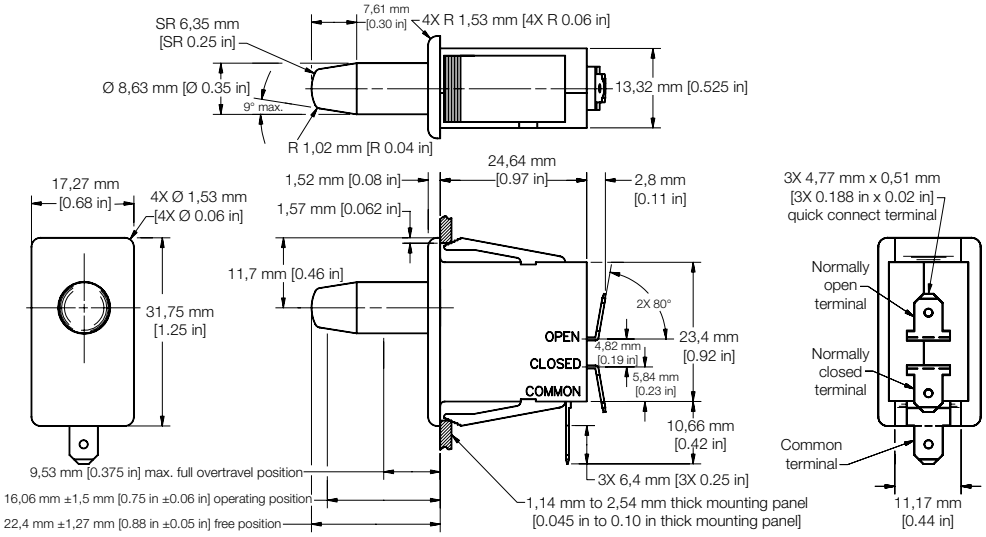

1DM18 DIMENSIONS

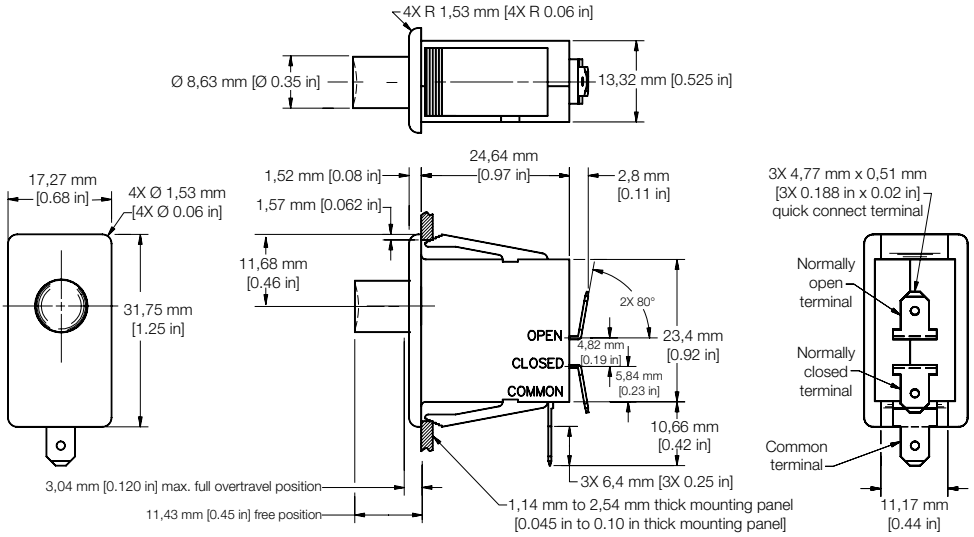

1DM21, 1DM38 DIMENSIONS

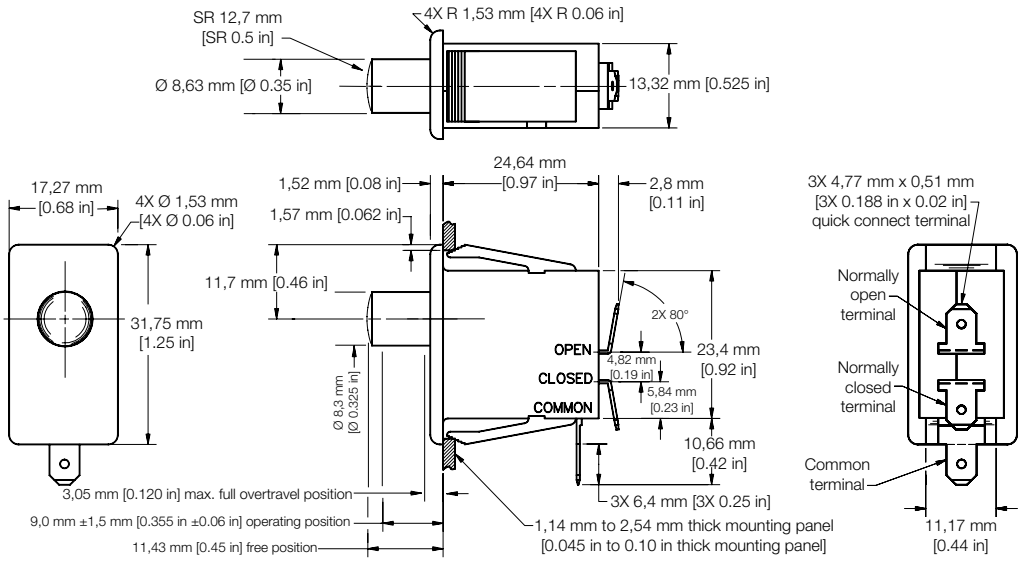

MICRO SWITCH™ Snap-in Panel Mount Basic Switches

1DM301, 2DM301 DIMENSIONS (two-pole version shown)

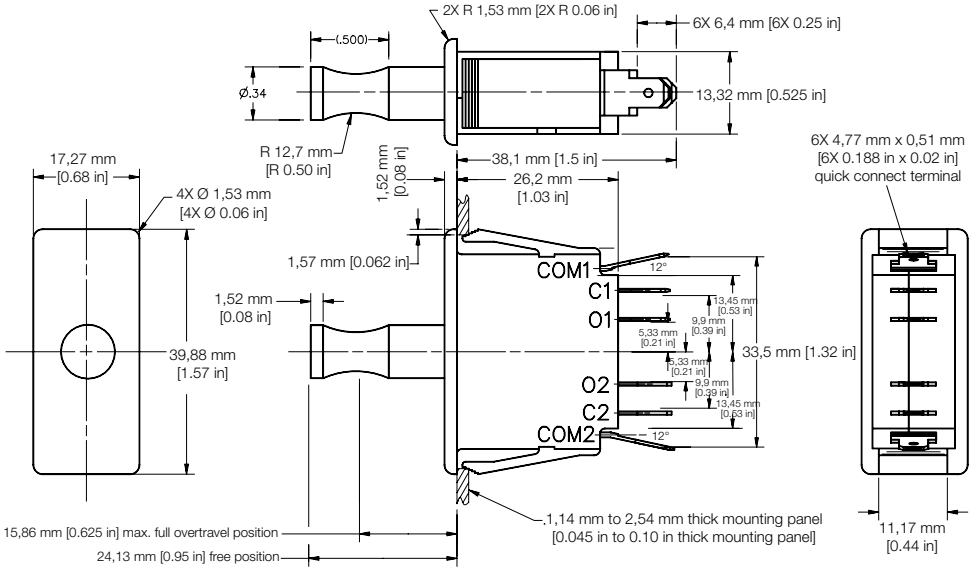

2DM6 DIMENSIONS

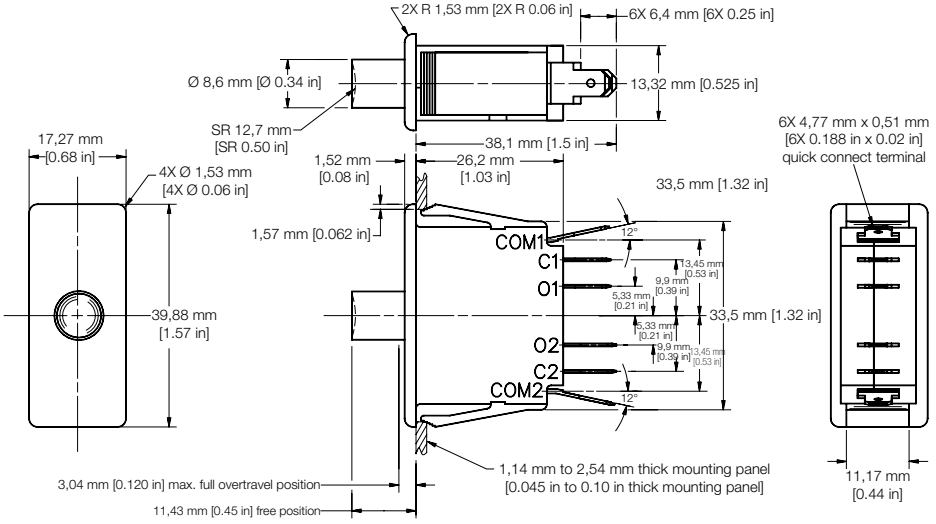

1DM401 DIMENSIONS

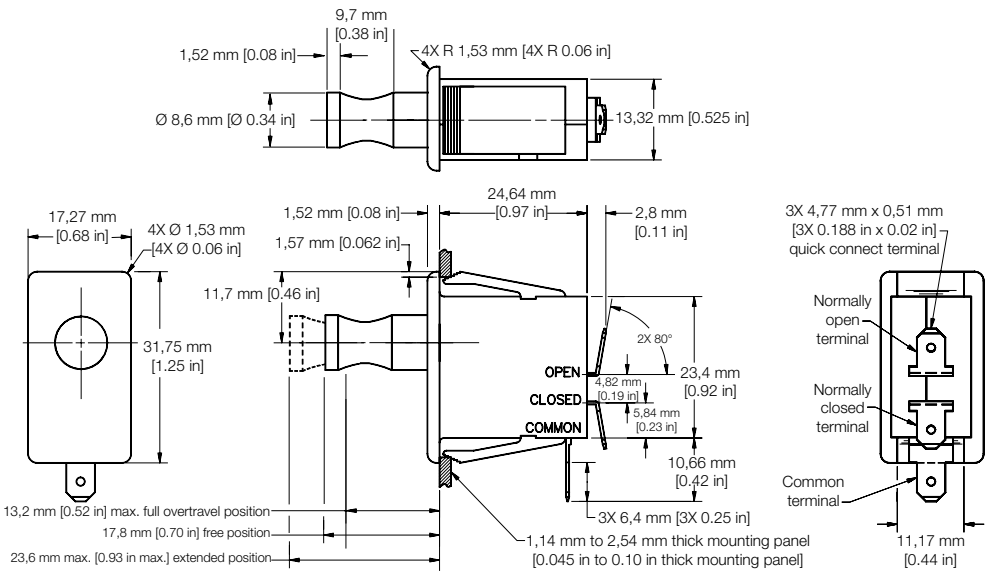

2DM1 DIMENSIONS

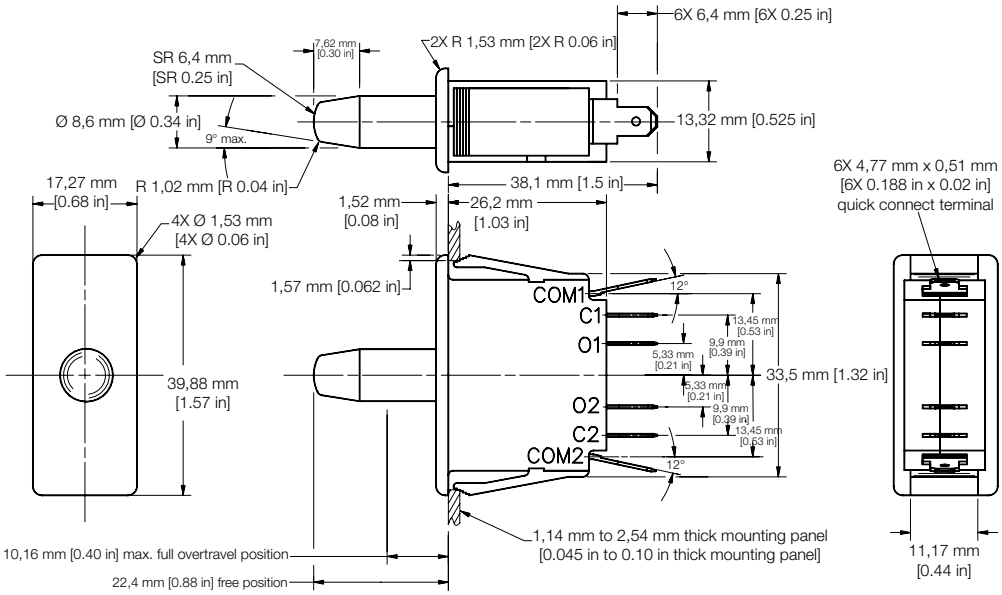

2DM409 DIMENSIONS

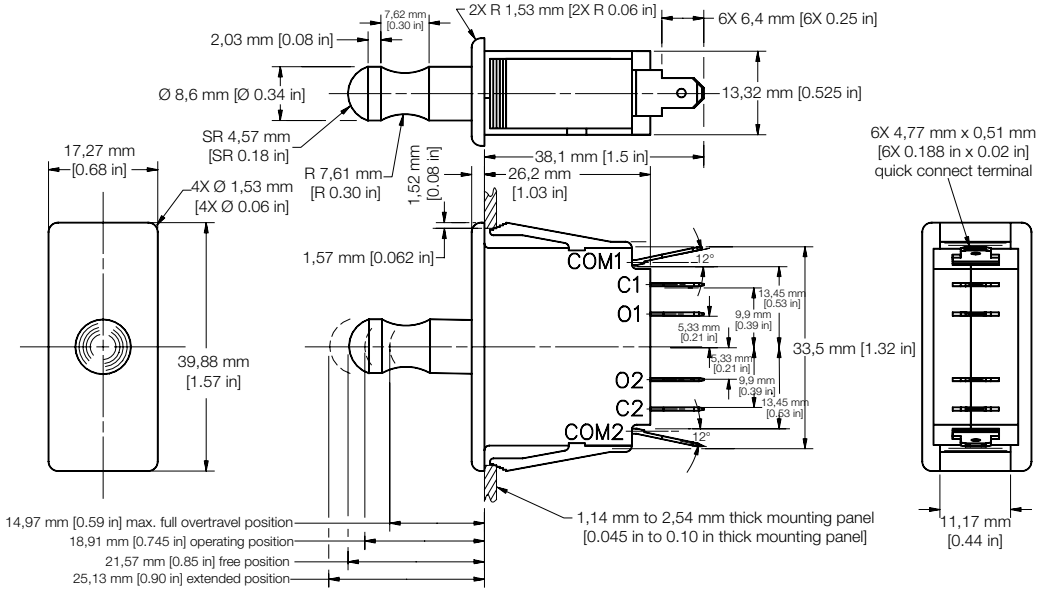

MICRO SWITCH™ Snap-in Panel Mount Basic Switches

1DP5, 1DP8 DIMENSIONS

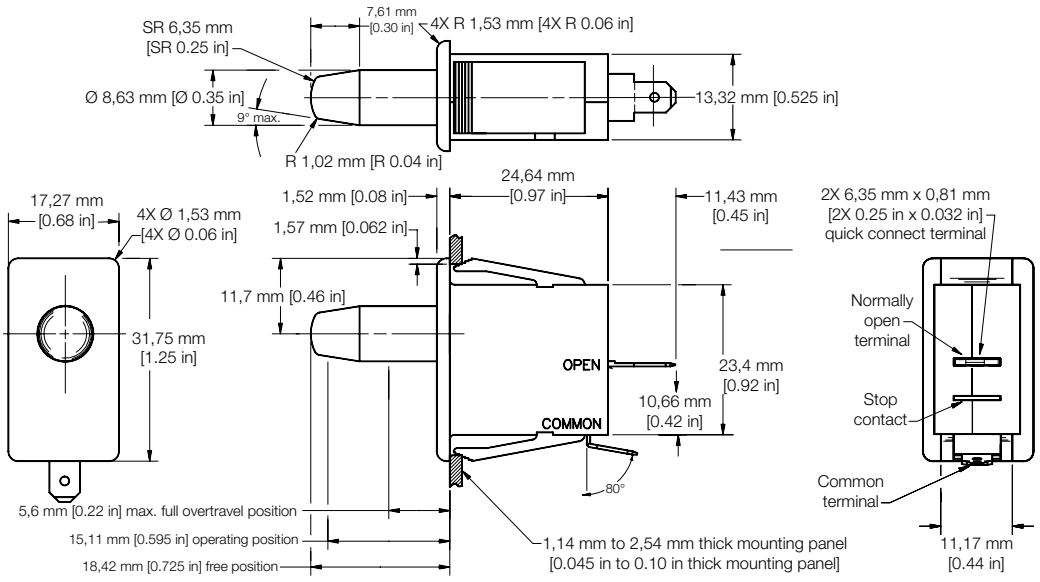

PANEL CUTOUTS

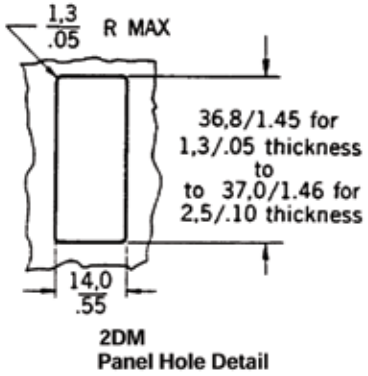

2DM
Panel Hole Detail

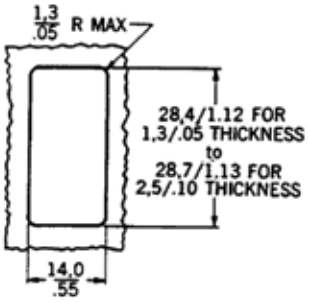

1DM/1DP
Panel Hole Detail

This Honeywell datasheet supports the following MICRO SWITCH™ DM & DP Series Basic Switch Listings

1DM1	1DM338	1DP8
1DM152	1DM401	2DM1
1DM171	1DM418	2DM11
1DM175	1DM423	2DM301
1DM176	1DM425	2DM310
1DM18	1DM435	2DM4
1DM2	1DM437	2DM409
1DM21	1DM5	2DM438
1DM23	1DM502	2DM6
1DM3	1DM503	2DM640
1DM301	1DM57	2DM8
1DM32	1DM79	2DM83
1DM335	1DP5	DM-10692

ADDITIONAL INFORMATION

The following associated literature is available on Honeywell's web site at sensing.honeywell.com:

- Product installation instructions
- Product range guide
- Product application-specific information
  – Application note: Sensors and Switches in Chemistry Analyzers

⚠WARNING

PERSONAL INJURY

DO NOT USE these products as safety or emergency stop devices or in any other application where failure of the product could result in personal injury.

Failure to comply with these instructions could result in death or serious injury.

⚠WARNING

MISUSE OF DOCUMENTATION

- The information presented in this product sheet is for reference only. Do not use this document as a product installation guide.
- Complete installation, operation, and maintenance information is provided in the instructions supplied with each product.

Failure to comply with these instructions could result in death or serious injury.

WARRANTY/REMEDY

Honeywell warrants goods of its manufacture as being free of defective materials and faulty workmanship. Honeywell's standard product warranty applies unless agreed to otherwise by Honeywell in writing; please refer to your order acknowledgement or consult your local sales office for specific warranty details. If warranted goods are returned to Honeywell during the period of coverage, Honeywell will repair or replace, at its option, without charge those items it finds defective. **The foregoing is buyer's sole remedy and is in lieu of all other warranties, expressed or implied, including those of merchantability and fitness for a particular purpose. In no event shall Honeywell be liable for consequential, special, or indirect damages.**

While we provide application assistance personally, through our literature and the Honeywell website, it is up to the customer to determine the suitability of the product in the application.

Specifications may change without notice. The information we supply is believed to be accurate and reliable as of this printing. However, we assume no responsibility for its use.

Find out more
Honeywell serves its customers through a worldwide network of sales offices, representatives and distributors. For application assistance, current specifications, pricing or name of the nearest Authorized Distributor, contact your local sales office.

To learn more about Honeywell's sensing and control products, call **+1-815-235-6847 or 1-800-537-6945**, visit **sensing.honeywell.com,** or e-mail inquiries to **info.sc@honeywell.com**

Sensing and Control
Honeywell
1985 Douglas Drive North
Golden Valley, MN 55422
honeywell.com

004980-2-EN IL50 GLO
November 2013
Copyright © 2013 Honeywell International Inc. All rights reserved.