FO-52847-F

REV	DOCUMENT	CHANGED BY	CHECK
8	0033839	PRS 13SEP07	CMH

XPC ____ G ____ ____

SERIES

MOTOROLA HOUSING COMPENSATED AND CALIBRATED (mV)

PRESSURE RANGE

0.3, 01, 05, 15, 30, 60, 100, 150 PSI

ACCURACY GRADE

C - COMMERCIAL GRADE
H - HIGH GRADE

PORT OPTION

F - AXIAL
T - RADIAL
FS - OFFSET AXIAL

PRESSURE REFERENCE

G - GAGE

CATALOG LISTINGS	
XPC0.3GFSH	XPC30GFSH
(7)	XPC30GTC
XPC01GFSH	(7)
XPC01GTC	(8)
XPC01GTH	(7)
(7)	XPC100GFH
XPC15GFH	XPC100GTC
XPC05GTH	(8)
(7)	(7)
XPC15GTC	XPC150GTC
XPC30GFC	XPC150GTH
(8)	XPC60GTC
XPC30GFH	SCDA102-XPC01GTH

G STYLE (GAGE)	PERFORMANCE AT 25°C AND 12±0.01 VDC (UNLESS OTHERWISE STATED)									
	C-GRADE			H-GRADE			UNITS	PROOF PRESSURE PSIG	BURST PRESSURE PSIG	FULL SCALE PRESSURE PSI
	MIN	NOM	MAX	MIN	NOM	MAX				
NULL OFFSET (0 PSIG), ALL LISTINGS	---	0	±1	---	0	±.5	mV			
SPAN 0.3 PSIG (PI>VENT)	19	20	21	19.5	20	20.5	mV	3	5	
SPAN 1 PSIG (PI>VENT)	17	18	19	17.5	18	18.5	mV	3	5	
SPAN 5 PSIG (PI>VENT)	57	60	63	59	60	61	mV	15	25	
SPAN 120cm H_2O (SCDA102) (PI>VENT)				30	30.5	31	mV	3	5	1.707
SPAN 15 PSIG (PI>VENT)	85	90	95	89	90	91	mV	45	75	
SPAN 30 PSIG (PI>VENT)	85	90	95	89	90	91	mV	90	150	
SPAN 60 PSIG (PI>VENT)	85	90	95	89	90	91	mV	180	300	
SPAN 100 PSIG (PI>VENT)	95	100	105	99	100	101	mV	250	400	
SPAN 150 PSIG (PI>VENT)	85	90	95	89	90	91	mV	250	400	
COMBINED LINEARITY AND HYSTERESIS (3)	---	0.25	1	---	0.25	0.5	%FS			
NULL SHIFT OVER TEMPERATURE (0-25, 25-70 °C)	---	---	±1	---	---	±.5	mV			
SPAN SHIFT OVER TEMPERATURE (0-25, 25-70 °C)	---	---	±2	---	---	±1	%FS			

GENERAL OPERATING CHARACTERISTICS	ALL PRESSURES AND GRADES			
	MIN	NOM	MAX	UNITS
EXCITATION VOLTAGE	3	12	16	VDC
SUPPLY CURRENT	---	---	3.5	mA
INPUT RESISTANCE	5	---	---	KΩ
OUTPUT RESISTANCE	---	3	---	KΩ
OPERATING TEMPERATURE	-25	---	85	°C
STORAGE TEMPERATURE	-40	---	125	°C

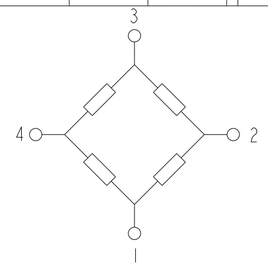

EQUIVALENT CIRCUIT

PIN OUT	
1	-V EXCITATION
2	+ OUTPUT SIGNAL
3	+ V EXCITATION
4	- OUTPUT SIGNAL

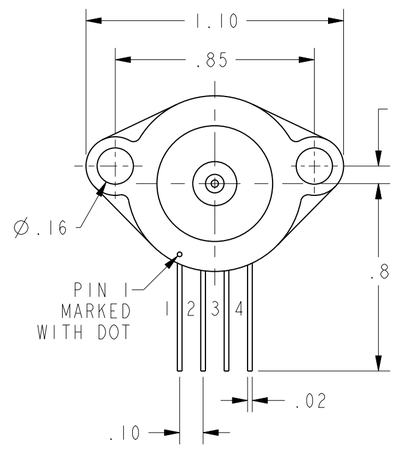

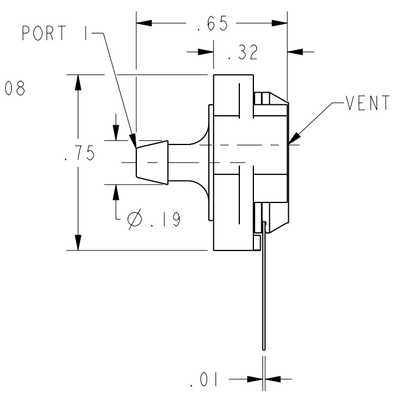

GFS HOUSING

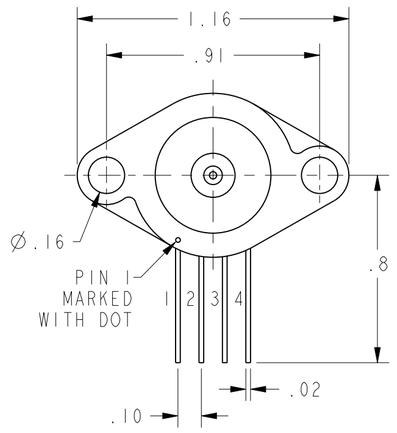

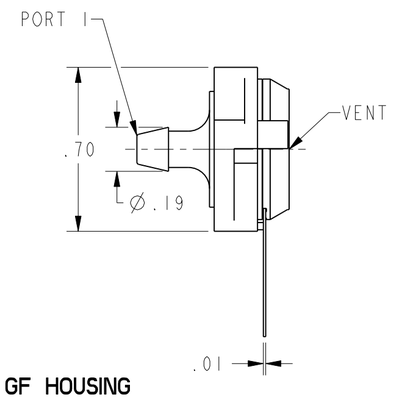

GF HOUSING

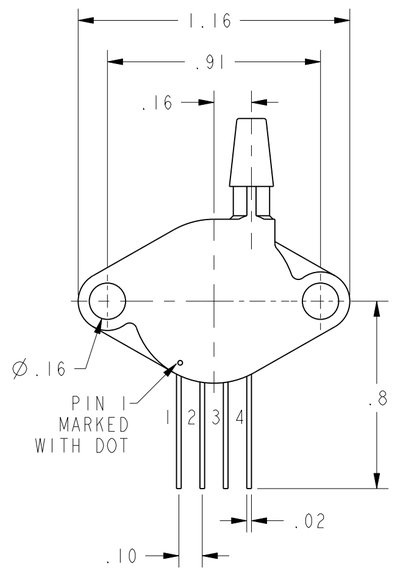

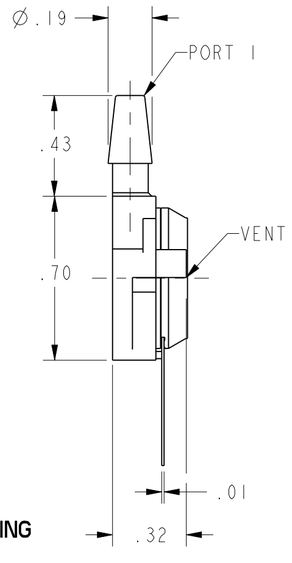

GT HOUSING

NOTES
1 - SPAN IS THE ALGEBRAIC DIFFERENCE BETWEEN THE OUPUT AT MAXIMUM RATED OPERATING PRESSURE AND THE OUTPUT AT 0 PSIG
2 - TEMPERATURE ERROR IS CALCULATED WITH RESPECT TO 25°C
(3) LINEARITY IS MEASURED AT 1/2 FULL SCALE PRESSURE USING BEST STRAIGHT LINE FIT
4 - THE OUTPUT OF THE SENSOR IS PROPORTIONAL, RATIOMETRIC, TO THE EXCITATION VOLTAGE. THE EXCITATION MAY VARY BETWEEN 3 TO 16 VDC
ALL SPECIFICATIONS WILL NOMINALLY BE CHANGED BY THE RATIO OF $V_{EXCITATION}$/12.0 VDC
5 - LIMIT SOLDERING TO 315°C FOR LESS THAN 10 SECONDS
6 - THE DOT ON THE HOUSING IDENTIFIES TERMINAL NO. 1
7 - APPLYING POSITIVE PRESSURE TO PORT NO. 1 RESULTS IN POSITIVE GOING OUPUT
8 - SENSORS ARE OPERATIONAL OVER VACUUM PRESSURE RANGE
9 - INPUT MEDIA RESTRICTED TO DRY GASES ONLY

UNLESS OTHERWISE SPECIFIED TOLERANCES ARE: [X] US(inch) CUSTOMARY [ ] SI(mm) METRIC

NO PLACE	X	±.040	±1
ONE PLACE	.X	±.030	±0,4
TWO PLACE	.XX	±.015	±0,15
THREE PLACE	.XXX	±.005	±
ANGLES		±	±

RAW MATERIAL-COMMERCIAL STANDARD

THIRD ANGLE PROJECTION

THIS DRAWING COVERS A PROPRIETARY ITEM AND IS THE PROPERTY OF HONEYWELL. THIS DRAWING IS NOT TO BE COPIED OR USED WITHOUT THE PERMISSION OF HONEYWELL.

DIMENSIONS ARE TO BE MET BEFORE PROTECTIVE COATINGS ARE APPLIED

DRAWN	TSM	16NOV00
CHECK	SAV	16NOV00

3D PTC | ASME Y14.5M-1994

Honeywell

TITLE: PRESSURE SENSOR-

SIZE	DWG TYPE	DRAWING NAME	REV
C	1	XPC GAGE SERIES CHART 1	8

SCALE 2:1 | WEIGHT | SHEET 1 OF 1