CSB200-897

SBC Fanless System
Slim Type System with IBASE IB897 3.5" Disk-Size SBC





Features

- Fanless system with IBASE IB897 3.5" Disk-Size SBC
- Onboard Intel® Atom™ Processor E3845 SoC, 1.91GHz
- iSMART- for auto-scheduler and power resume
- Wide-range operating temperature from -30°C to 60°C
- 12V~24V DC wide-range power input
- Supports 2x Mini PCI-E (1x full-size & 1x half size)
- Supports 1x 2.5" SATA HDD or SSD
- Wall mount kit included

Specifications

System Mainboard	IB897-I45P
CPU Type	Intel® Atom™ QC Processor E3845
System Speed	1.91GHz
Memory	2x 2GB DDR3L-1333 SO-DIMM, Max. 8GB
Construction	Aluminum & steel
Chassis Color	Black
Front Panel External I/O	1x Power LED 1x HDD LED 1x Power button 1x Reset button 2x USB 2.0 ports 1x Line-out, 1x Mic-in
Rear Panel External I/O	1x USB 2.0 port 1x USB 3.0 port 1x DisplayPort 1x VGA port 2x DB9 for COM1(RS232/422/485, select from BIOS) / COM2 2x RJ45 GbE connector 1x DC jack with lock or terminal block (12V~24V DC)
Storage	1x 2.5" HDD or SSD
Mounting	Desktop or wall mount (wall mount kit included)
Dimensions	172mm (W) x 111.6mm (D) x 52mm (H) 6.77"(W) x 4.39"(D) x 2.05"(H)
Weight	1.1kg
Operating Temperature	-30°C~60°C (22°F~140°F)
Storage Temperature	-40°C ~ 85°C (-40°F~185°F)
Relative Humidity	5~90% @ 45°C, (non-condensing)
Vibration	Operating: 0.25Grms / 5~500Hz Non-operating: 1Grms / 5~500Hz
Shock	Operating: 20G / 11ms Non-operating: 40G / 11ms
Certification	CE / LVD / FCC Class B / CCC

Ordering Information

CSB200-897	Fanless chassis with IB897-I45P, Intel® Atom™ E3845 SoC (1.91GHz), 2x COM, 2x 2GB DDR3L memory, 2.5" 320GB SATA HDD (w/o 60W power adaptor)
CSB200-897-IT	Fanless chassis with IB897-I45P, Intel® Atom™ E3845 SoC (1.91GHz), 2x COM, 2x 2GB DDR3L memory, 2.5" 64GB industrial-grade SSD (w/o 60W power adaptor)
60W power adaptor (Optional)	60W (12V@5A) power adaptor, DC-jack or bare wire type

Dimensions and Drawing

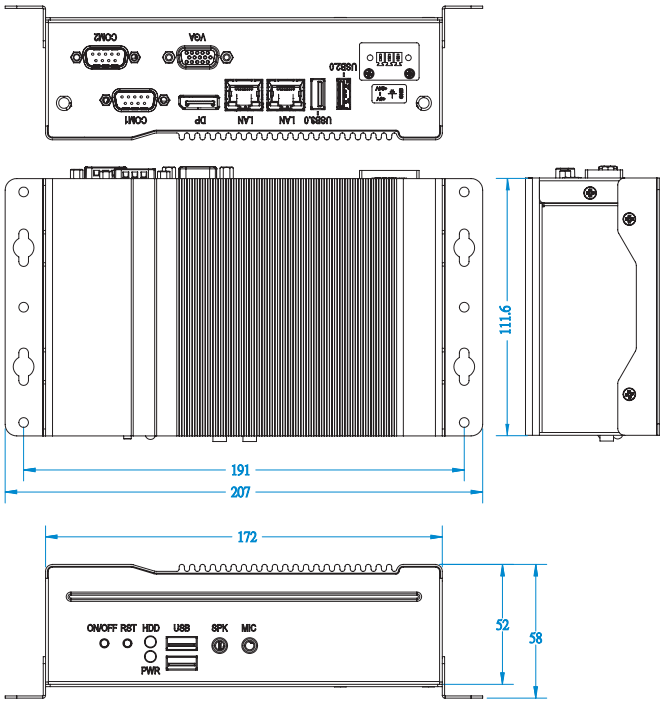

Remarks: 1. Specifications are subject to change without prior notice. 2. ODM/OEM is available. 3. For user's manual & datasheet download, visit www.ibase.com.tw.