Power Relays:
RL Series

Quick Connect
Flange Mount





Screw Terminal
DIN Rail Mount

PRODUCT DESCRIPTION

Designed with a 1- and 2-pole 3HP/277V AC rating in an economical and compact package, 30A RL power relays are the superior choice for HVAC panels, energy management and applications requiring higher voltage loads and inductive kick-back. Choose from panel or DIN rail mounting.

Unlike the competition, when DIN rail mounted, RL relays don't require a socket or adaptor. Quick Connect terminals allow faster installation on commercial applications, while screw terminations are ideal for industrial applications.

SPECIFICATIONS

		RL1	RL2
Number of poles		1 pole	2 poles
Contact Configuration		1X (SPST, double make)	2X (DPST, double make)
Contact material		Ag Alloy	Ag Alloy
Operating Time and Release Time		30ms max	30ms max
Degree of Protection		IP40	IP40
Dielectric strength	Between contact and coil	4,000V AC for 1 minute	4,000V AC for 1 minute
	Between pole	2,000V AC for 1 minute	2,000V AC for 1 minute
	Between contact sets	-	2,000V AC for 1 minute
Vibration Resistance	Operating extremes	Frequency 10 to 55 Hz, Amplitude 0.75mm	Frequency 10 to 55 Hz, Amplitude 0.75mm
	Damage limits	Frequency 10 to 55 Hz, Amplitude 0.75mm	Frequency 10 to 55 Hz, Amplitude 0.75mm
Shock Resistance	Operating extremes	100 m/s² (10G)	100 m/s² (10G)
	Damage limits	1,000 m/s² (100G)	1,000 m/s² (100G)
Electrical Life (rated load). Operation frequency (1800 operations per hour)	AC resistive load	200,000 operations minimum	200,000 operations minimum
	Inductive load	100,000 operations minimum	100,000 operations minimum
Mechanical Life (without load)		1,000,000 operations minimum	1,000,000 operations minimum
Operating Temperature		-25 to +55°C	-25 to +55°C
Operating Humidity		5 to 85% (without condensation)	5 to 85% (without condensation)
Weight		Between 90 and 135 grams, depending on model	Between 90 and 135 grams, depending on model

KEY FEATURES

- 3HP at 277VAC, 1.5HP at 120VAC
- Single pole rated at 30A, double pole at 25A
- Double Make contacts
- Flange mount or DIN-rail mount with panel mount tabs
- #250 quick-connect or screw terminations
- AC or DC Coil Inputs
- Designed for Motor, Lighting, and Heater Loads
- Up to 7500 VA maximum switching power
- RoHS compliant

STANDARDS COMPLIANCE

Agency ratings	RL1	RL2
Standard current ratings	30 A, 277 Vac, General Use, 100,000 Cycles	25 A, 277 Vac, General Use, 100,000 cycles
HP ratings	1.5 HP, 120 Vac, 10,000 Cycles	1.5 HP, 120 Vac, 10,000 Cycles
	3 HP, 277 Vac, 30,000 Cycles	3 HP, 277 Vac, 30,000 Cycles
FLA and LRA ratings	20 FLA, 120 LRA, 120 Vac, 50/60 Hz, 30,000 Cycles	20 FLA, 120 LRA, 120 Vac, 50/60 Hz, 30,000 Cycles
	17 FLA, 102 LRA, 277 Vac, 50/60 Hz, 30,000 Cycles	17 FLA, 102 LRA, 277 Vac, 50/60 Hz, 30,000 Cycles

COIL RATINGS

Rated Voltage		Coil Voltage Code	Rated Current (mA) ±10%	Coil Resistance (Ω)	Operating Characteristics at 20°C			Power Consumption
					Pickup Voltage	Dropout Voltage	Maximum Allowable Voltage	
DC	12V	D12	160	75	80% max	15% min	110%	1.9W
	24V	D24	79.0	303				1.9W

Rated Voltage		Coil Voltage Code	Rated Current (mA) +15% -25%		Coil Resistance (Ω)	Operating Characteristics at 20°C			Power Consumption
			50Hz	60Hz		Pickup Voltage	Dropout Voltage	Maximum Allowable Voltage	
AC (50-60Hz)	24V	A24	71.0	69.5	-	80% max	10% min	110%	1.7-2.5VA
	100V - 120V	A100	17.0	16.6	-				1.7-2.5VA
	200V - 240V	A200	8.5	8.1	-				1.7-2.5VA

CONTACT RATINGS

		RL1	RL2
Allowable Contact Power	Resistive load	7500VA	6250VA
Rated Load	Resitive load	250VAC 30A, 30VDC 30A	250VAC 25A, 30VDC 25A
Allowable Switching Current		30A	25A
Allowable Switching Voltage		277VAC	

PART NUMBERS

Flange Mount

Coil voltage		Screw Terminal 1 Pole Flange Mount	Screw Terminal 2 Pole Flange Mount	Quick Connect Terminal 1 Pole Flange Mount	Quick Connect Terminal 2 Pole Flange Mount
DC	12V	RL1N-T-D12	RL2N-T-D12	RL1B-T-D12	RL2B-T-D12
	24V	RL1N-T-D24	RL2N-T-D24	RL1B-T-D24	RL2B-T-D24
AC	24V	RL1N-T-A24	RL2N-T-A24	RL1B-T-A24	RL2B-T-A24
	100V - 120V	RL1N-T-A100	RL2N-T-A100	RL1B-T-A100	RL2B-T-A100
	200V - 240V	RL1N-T-A200	RL2N-T-A200	RL1B-T-A200	RL2B-T-A200

DIN Rail Mount with Panel Mount Tabs

Coil voltage		Screw Terminal 1 Pole DIN Rail	Screw Terminal 2 Pole DIN Rail	Quick Connect Terminal 1 pole DIN Rail	Quick Connect Terminal 2 Pole DIN Rail
DC	12V	RL1N-D-D12	RL2N-D-D12	RL1B-D-D12	RL2B-D-D12
	24V	RL1N-D-D24	RL2N-D-D24	RL1B-D-D24	RL2B-D-D24
AC	24V	RL1N-D-A24	RL2N-D-A24	RL1B-D-A24	RL2B-D-A24
	100V - 120V	RL1N-D-A100	RL2N-D-A100	RL1B-D-A100	RL2B-D-A100
	200V - 240V	RL1N-D-A200	RL2N-D-A200	RL1B-D-A200	RL2B-D-A200

Part Number Structure

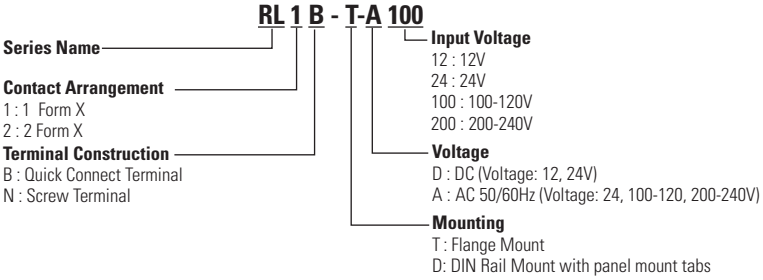

DIMENSIONS (All dimensions in mm, except where noted.)

RL1N-T Screw Terminal 1 Pole Flange Mount

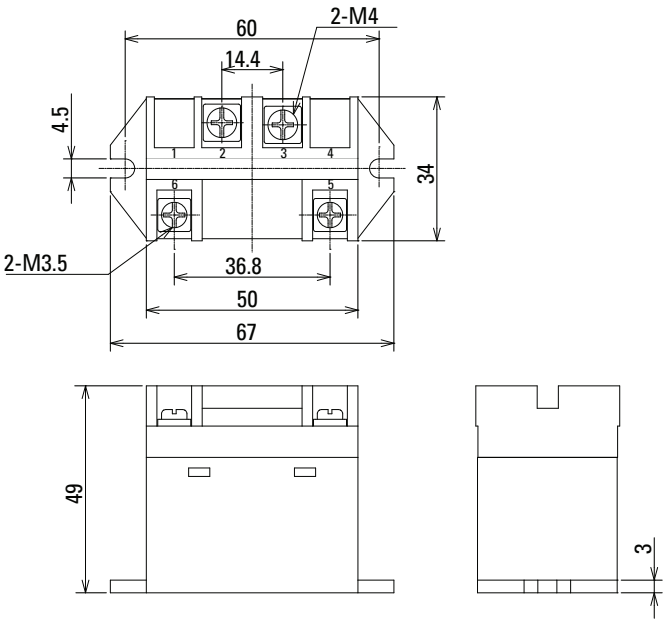

RL2N-T Screw Terminal 2 Pole Flange Mount

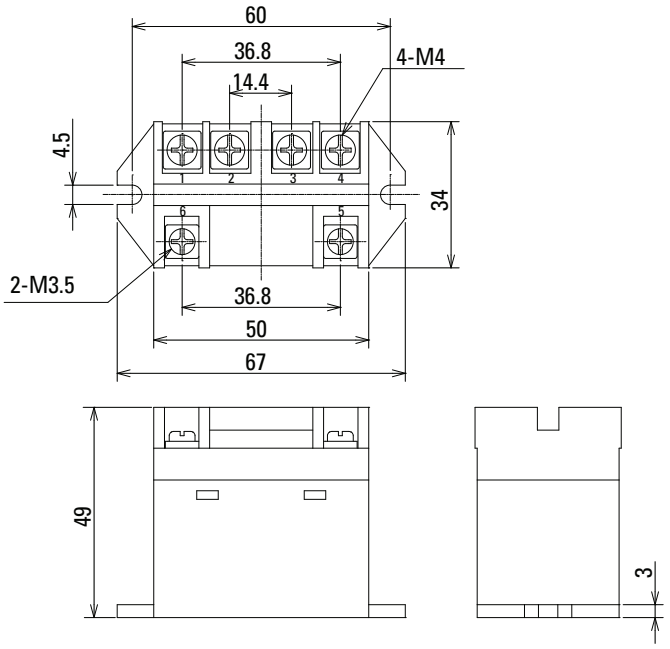

Recommended tightening torque: Coil terminals (M3.5): 0.7 - 0.9 N·m, Contact terminals (M4): 1.0 - 1.4 N·m

RL1B-T Quick Connect Terminal 1 Pole Flange Mount

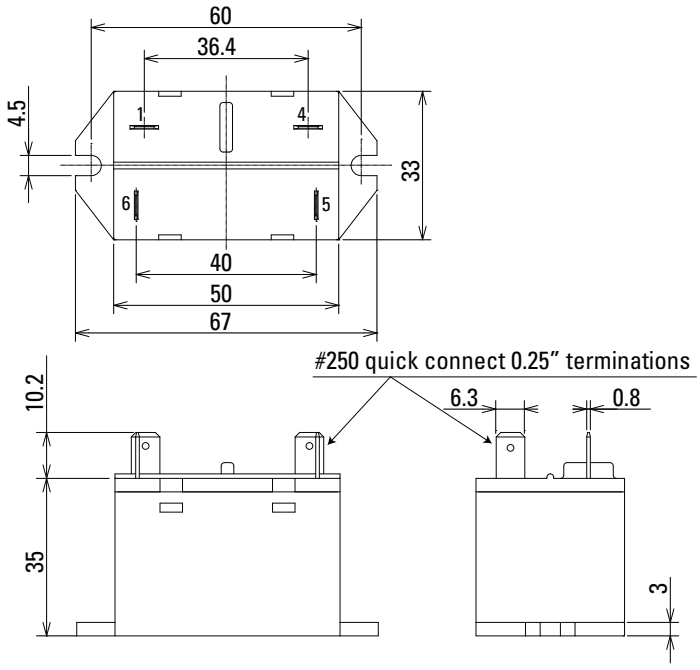

RL2B-T Quick Connect Terminal 2 Pole Flange Mount

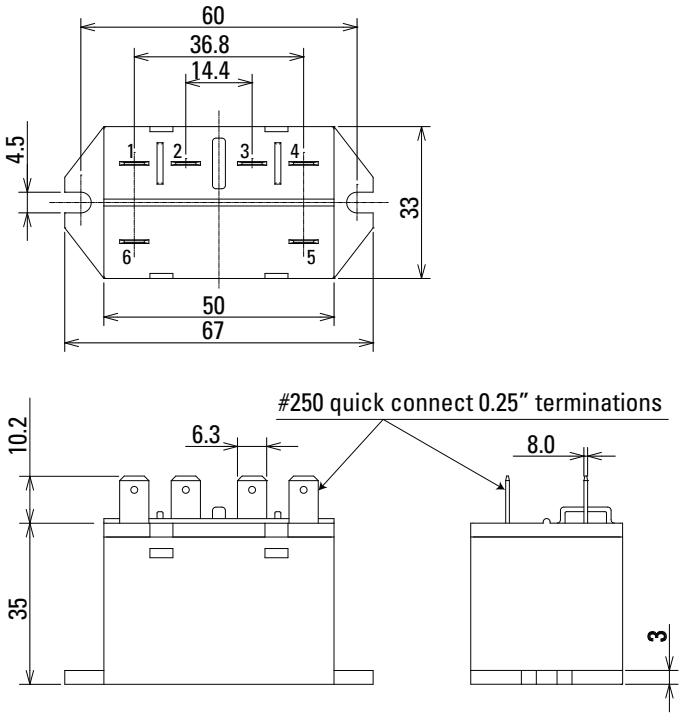

RL1N-D Screw Terminal 1 Pole DIN Rail Mount

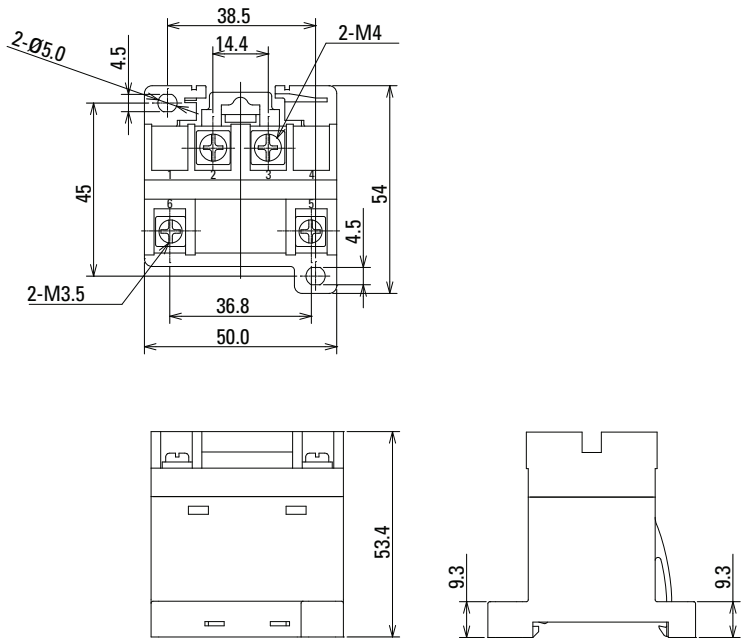

RL2N-D Screw Terminal 2 Pole DIN Rail Mount

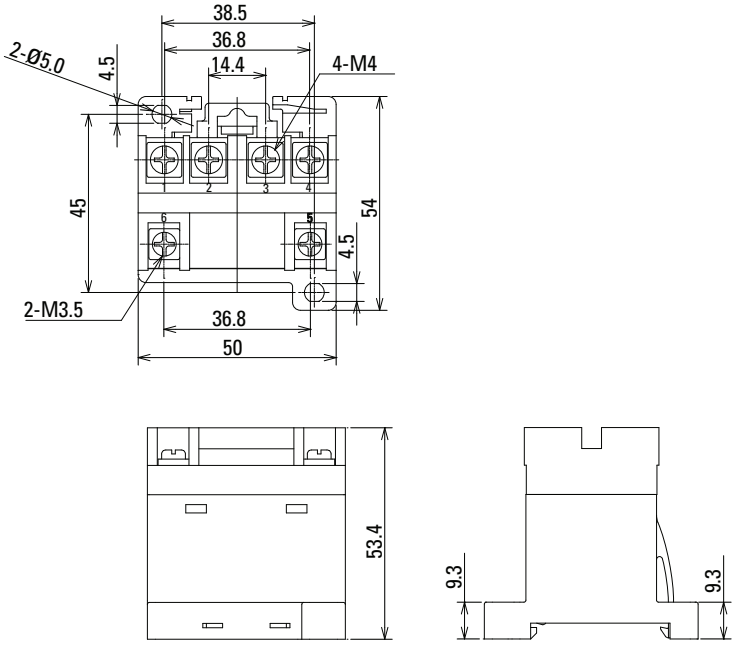

Recommended tightening torque: Coil terminals (M3.5): 0.7 - 0.9 N·m, Contact terminals (M4): 1.0 - 1.4 N·m

RL1B-D Quick Connect Terminal 1 Pole DIN Rail Mount

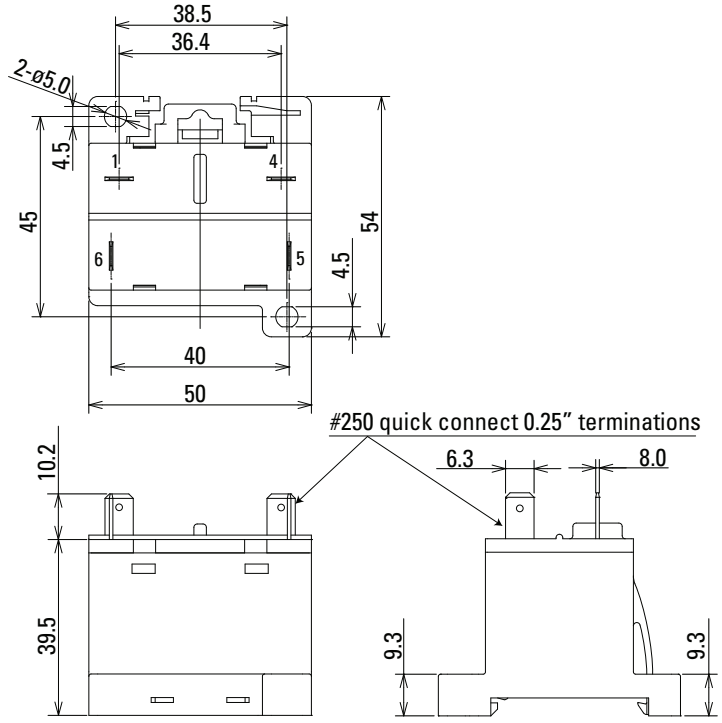

RL2B-D Quick Connect Terminal 2 Pole DIN Rail Mount

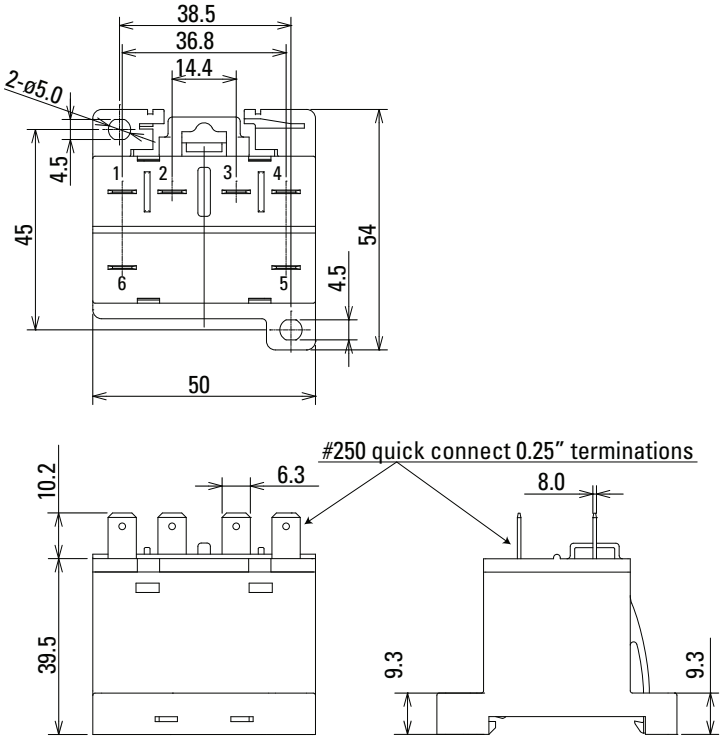

ACCESSORIES

Description	Color	Part Number
Finger-safe terminal cover 	Clear	RL9Z-C

Applicable for screw terminal models only

TERMINAL ARRANGEMENTS (TOP VIEW)

Screw Terminal
1 Pole Flange Mount

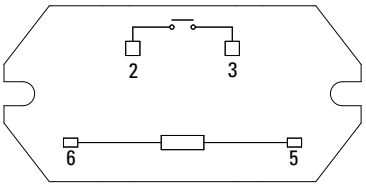

Quick Connect Terminal
1 Pole Flange Mount

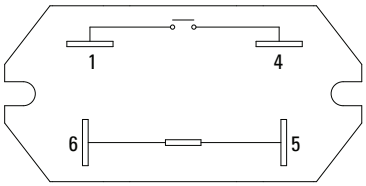

Screw Terminal
1 Pole DIN Rail Mount

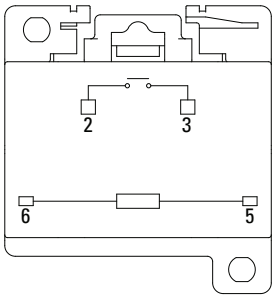

Quick Connect Terminal
1 Pole DIN Rail Mount

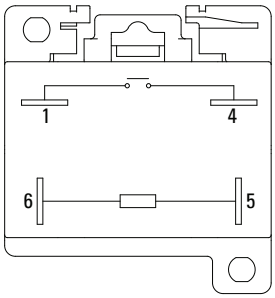

Screw Terminal
2 Pole Flange Mount

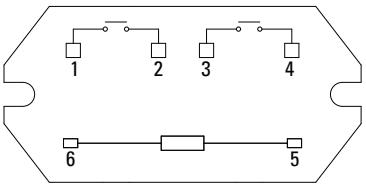

Quick Connect Terminal
2 Pole Flange Mount

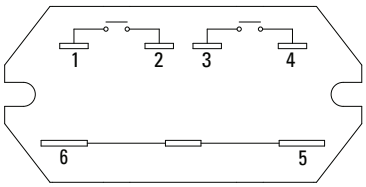

Screw Terminal
2 Pole DIN Rail Mount

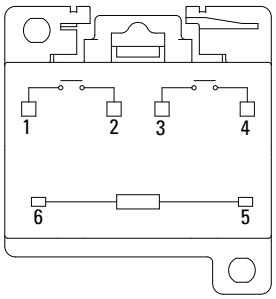

Quick Connect Terminal
2 Pole DIN Rail Mount

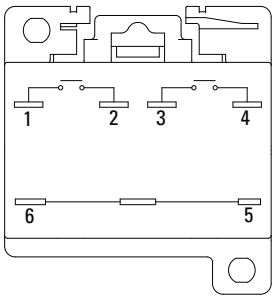

MOUNTING HOLE DIMENSIONS

Flange Mount

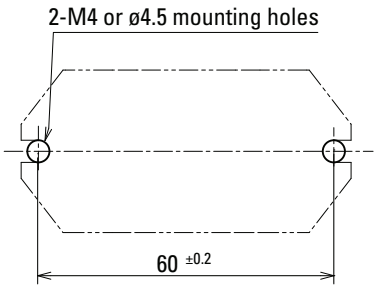

DIN Rail Mount with Panel Mount Tabs

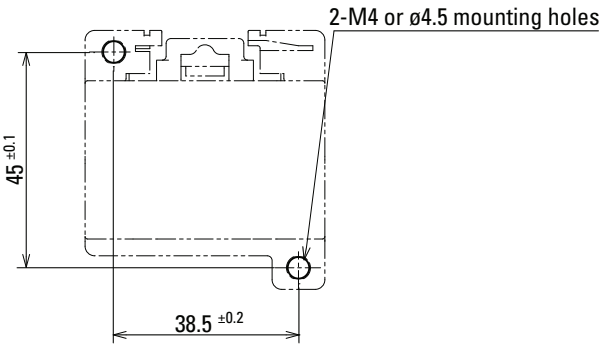

Recommended tightening torque: 0.6 - 0.9 N·m

Recommended ring or fork terminations for screw terminals.

Contact Terminals

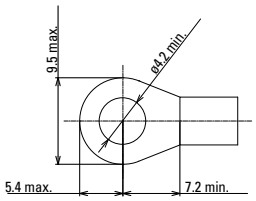

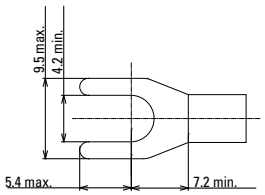

Coil Terminals

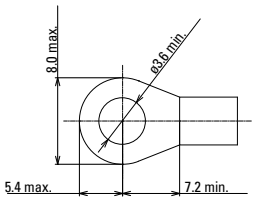

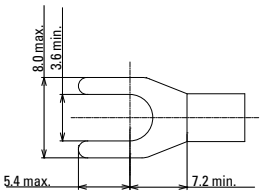

Electrical Life Curves

RL1

1 pole

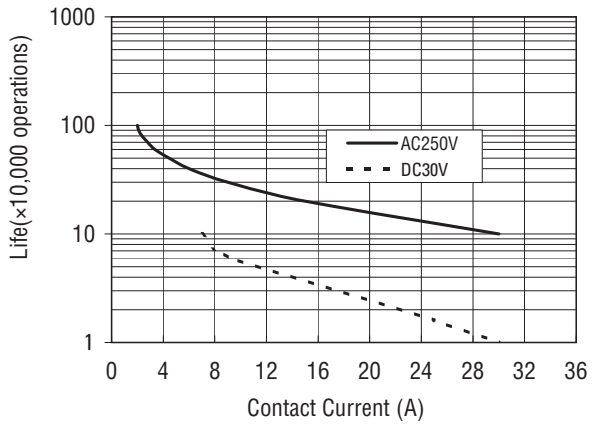

RL2

2 poles

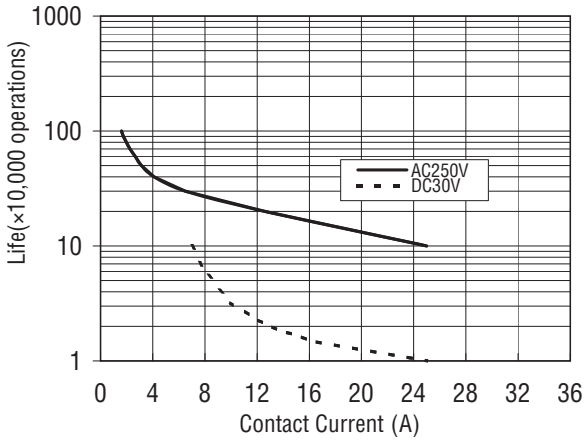

Maximum Switching Capacity

RL1

1 pole

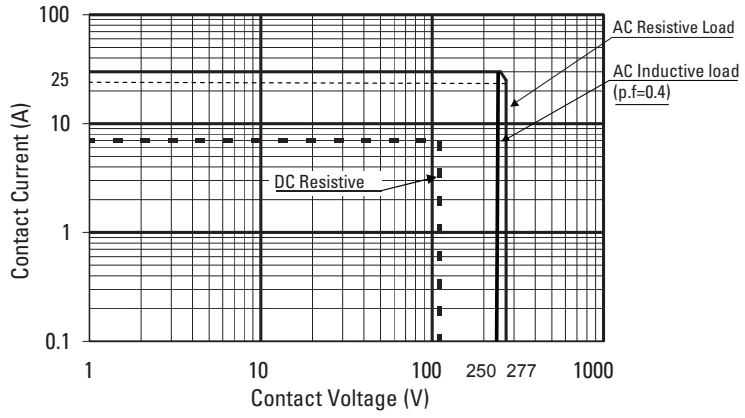

RL2

2 poles

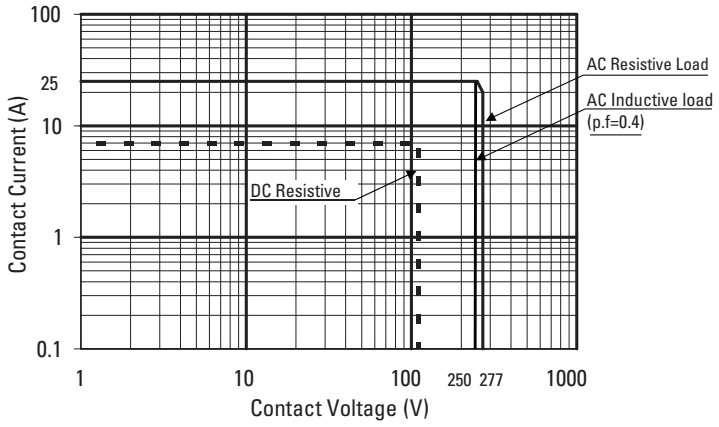

IDEC Corporation • 1175 Elko Drive • Sunnyvale, CA 94089 • 800-262-IDEC (4332) • Fax: 408-745-5258 • www.IDEC.com/usa

©2015 IDEC Corporation. All Rights Reserved. RV9Y-DS200-0a *pdf only*