Selection Guide 988
YC1N K Mini Contactors 989
Part Numbers 989
Accessories 991
Specifications 991
Dimensions 992
Electrical Diagrams 992
YC1U Series Contactor AC Coil 993
Part Numbers 993
Accessories 995
Specifications 996
Dimensions 997
Electrical Diagrams 999
YC1N Series Contactors AC Coil 1000
Part Numbers 1000
Accessories 1001
Specifications 1002
Dimensions 1003
Electrical Diagrams 1004

Contactors

IDEC

www.IDEC.com/contactor

Selection Guide

Selection by Horsepower Rating (AC Coil)

Series	YC1N(K) Mini series	YC1U AC Series	YC1N AC Series
		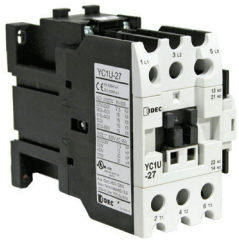	
Coil Voltage	AC or DC	AC	AC
Amp Range (AC3)	9A & below	9A - 80A	80A - 300A
RoHS Compliance	Yes	Yes	Yes
Page	989	993	1000
Approvals	CE c UL us LISTED	CE c UL us LISTED	CE c UL us LISTED

Bi-Metalic Thermal Overloads

Series	YC9Z	YC9Z	YC9Z
			
Amp Range	0.1 - 12.5 Amps	0.1 - 90 Amps	65 - 185 Amps
Phase Failure	Yes	Yes	Yes
Reset Mode	Manual and Automatic	Manual and Automatic	Manual and Automatic
RoHS Compliant	Yes	Yes	Yes
Page	991	995	995
Approvals	CE c UL us LISTED	CE c UL us LISTED	CE c UL us LISTED

YC1N(K) Mini Contactors

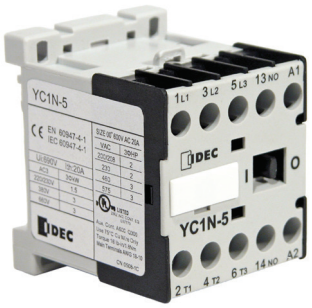

Key Features:

- Phase with built in NO or NC Auxiliary contact
- Top mount snap-on Auxiliary contact blocks
- 4 Amp & 5.5 Amp AC-3 Ratings
- Comply with IEC 60945, UL508, CSA C22.2 standards

Part Number Key

YC1 [N] – [5] [B] [A120]

Coil Voltage Code
N: AC Coil
K: DC Coil

Contactor Size*
(5, 6)

*See selection table for details.

Coil Voltage
A24: 24V AC, 50/60Hz
A120: 120V AC, 50/6-Hz
A240: 240V AC, 50/60Hz
A480: 480V AC, 50/60Hz
D24: 24V DC
D110: 110V DC

Auxiliary Contact Arrangement
Blank: 1NO
B: 1NC

Part Numbers

Selection by Horsepower Rating (AC Coil)

	Rated Power (Hp) per AC3 IEC 60947-4-1							Rated Power (Hp) per UL508 CSA C22.2						Auxilary Contact	Part Numbers		Coil Voltage
	1-Phase		3-Phase					1-Phase		3-Phase							
	110V	220V	220/240V	380/400V	415/440V	500V	660/690V	110/120V	220/240V	200/208V	230/240V	440/480V	575V				
	0.5	1	2	4	4	4	4	–	–	2	2	3	3	1NO	YC1N-5	+	A24: 24V AC A120: 120V AC A240: 240V AC A480: 480V AC
														1NC	YC1N-5B		
	0.75	1.5	3	5.5	5.5	5.5	5.5	–	–	3	3	5	5	1NO	YC1N-6		
														1NC	YC1N-6B		

Selection by Horsepower Rating (DC Coil)

	Rated Power (Hp) per AC3 IEC 60947-4-1							Rated Power (Hp) per UL508 CSA C22.2						Auxilary Contact	Part Numbers		Coil Voltage
	1-Phase		3-Phase					1-Phase		3-Phase							
	110V	220V	220/ 240V	380/ 400V	415/ 440V	500V	660/ 690V	110/ 120V	220/ 240V	200/ 208V	230/ 240V	440/ 480V	575V				
	0.5	1	2	4	4	4	4	–	–	2	2	3	3	1NO	YC1K-5	+	D24: 24V DC D110: 110V DC
														1NC	YC1K-5B		
	0.75	1.5	3	5.5	5.5	5.5	5.5	–	–	3	3	5	5	1NO	YC1K-6		
														1NC	YC1K-6B		

Selection by Amp Rating (AC Coil)

Rated Power (A) per AC3 IEC 60947-4-1							Rated Power (A) per UL508 CSA C22.2						Auxilary Contact	Part Numbers		Coil Voltage
1-Phase		3-Phase					1-Phase		3-Phase							
110V	220V	220/ 240V	380/ 400V	415/ 440V	500V	660/ 690V	110/ 120V	220/ 240V	200/ 208V	230/ 240V	440/ 480V	575V				
8	7	7.5	7	6.5/6	5	4	–	–	7.5	6.8	4.8	3.9	1NO	YC1N-5	+	A24: 24V AC A120: 120V AC A240: 240V AC A480: 480V AC
													1NC	YC1N-5B		
10.5	10	10.1	9	8.5/8	6.5	5	–	–	11	9.6	7.6	6.1	1NO	YC1N-6		
													1NC	YC1N-6B		

Selection by Amp Rating (DC Coil)

Rated Power (A) per AC3 IEC 60947-4-1							Rated Power (A) per UL508 CSA C22.2						Auxilary Contact	Part Numbers		Coil Voltage
1-Phase		3-Phase					1-Phase		3-Phase							
110V	220V	220/ 240V	380/ 400V	415/ 440V	500V	660/ 690V	110/ 120V	220/ 240V	200/ 208V	230 240V	440/ 480V	575V				
8	7	7.5	7	6.5/ 6	5	4	–	–	7.5	6.8	4.8	3.9	1NO	YC1K-5	+	D24: 24V DC D110: 110V DC
													1NC	YC1K-5B		
10.5	10	10.1	9	8.5/8	6.5	5	–	–	11	9.6	7.6	6.1	1NO	YC1K-6		
													1NC	YC1K-6B		

Selection by Kilowatt Rating (AC Coil)

Rated Power (kW) per AC3 IEC 60947-4-1							Auxilary Contact	Part Numbers		Coil Voltage
1-Phase		3-Phase								
110V	220V	220/240V	380/400V	415/440V	500V	660/690V				
0.37	0.75	1.5	3	3	3	3	1NO	YC1N-5	+	A24: 24V AC A120: 120V AC A240: 240V AC A480: 480V AC
							1NC	YC1N-5B		
0.55	1.1	2.2	4	4	4	4	1NO	YC1N-6		
							1NC	YC1N-6B		

Selection by Kilowatt Rating (DC Coil)

Rated Power (kW) per AC3 IEC 60947-4-1							Auxilary Contact	Part Numbers		Coil Voltage
1-Phase		3-Phase								
110V	220V	220/240V	380/400V	415/440V	500V	660/690V				
0.37	0.75	1.5	3	3	3	3	1NO	YC1K-5	+	D24: 24V DC D110: 110V DC
							1NC	YC1K-5B		
0.55	1.1	2.2	4	4	4	4	1NO	YC1K-6		
							1NC	YC1K-6B		

Accessories

Description	Current Range	Part Number
Overload Relay 	0.1-0.16A	YC9Z-RHU5AP16
	0.16-0.25A	YC9Z-RHU5AP25
	0.25-0.4A	YC9Z-RHU5AP4
	0.35-0.5A	YC9Z-RHU5AP5
	0.45-0.63A	YC9Z-RHU5AP63
	0.55-0.8A	YC9Z-RHU5AP8
	0.75-1A	YC9Z-RHU5A1P0
	0.9-1.3A	YC9Z-RHU5A1P3
	1.1-1.6A	YC9Z-RHU5A1P6
	1.4-2A	YC9Z-RHU5A2P0
	1.8-2.5A	YC9Z-RHU5A2P5
	2.3-3.2A	YC9Z-RHU5A3P2
	2.9-4A	YC9Z-RHU5A4P0
	3.5-4.8A	YC9Z-RHU5A4P8
	4.5-6.3A	YC9Z-RHU5A6P3
	5.5-7.5A	YC9Z-RHU5A7P5
	7.2-10A	YC9Z-RHU5A10P
	9-12.5A	YC9Z-RHU5A12P

Description	Form A (NO)	Form B (NC)	Part Number
Top Mount Auxiliary Contact 	–	2 NC	YC9Z-CNA202M
	–	4 NC	YC9Z-CNA404M
	1 NO	1 NC	YC9Z-CNA211M
	1 NO	3 NC	YC9Z-CNA413M
	2 NO	–	YC9Z-CNA220M
	2 NO	2 NC	YC9Z-CNA422M
	3 NO	1 NC	YC9Z-CNA431M
	4 NO	–	YC9Z-CNA440M
Mechanical Interlock - for Reversing Contactors 			YC9Z-CI6
Surge Suppressor Unit	120V AC	RC	YC9Z-SS1ES
		VARISTOR	YC9Z-SS2ES
	240V AC	RC	YC9Z-SS1HS
		VARISTOR	YC9Z-SS2HS

Specifications

General Specifications

	YC1N-5/6	YC1K-5/6
Contact Configuration	3A1a or 3A1b	
Making Capacity (A)	10xIe	
Breaking Capacity (A)	8xIe	
Switching Frequency (Operations/Hr)	1,200	
Electrical Life (Operations)	1,000,000	
Mechanical Life (Operations)	5,000,000	
Operating Temperature	-20°C ~ 55°C	
Storage Temperature	-40°C ~ 70°C	
Weight (Kg)	0.18	0.23

Note: Ie = rated operational current

Main Pole Contact Specifications

	YC1N-5/6	YC1K-5/6
Insulation Voltage, Ui (V)	IEC: 690	UL: 600
Operational Voltage, Ue (V)	IEC: 690	UL: 600
Thermal Current, I_{th} (A)	IEC /UL: 20	
Short Circuit Current Rating (KA)	5	
NEMA Size Equivalent (approx.)	00+	

Auxilary Contacts Specifications

			YC1N-5/6	YC1K-5/6
Insulation Voltage, Ui (V)			IEC /UL: 600/600	
Operational Voltage, Ue (V)			IEC /UL: 600/600	
Thermal Current, I_{th} (A)			AC: 10	DC: 2.5
Operational Current (A) IEC 60947-5-1 UL 508	AC-15 A600	120V	6	
		240V	3	
		380V	1.9	
		480V	1.5	
		500V	1.4	
		600V	1.2	
	DC-13 Q300	125V	0.55	
		250V	0.27	

Coil Specifications

		YC1N-5/6	YC1K-5/6
Pick-up Voltage	50/60Hz	75%	75%
Power Consumption, max. (VA)	Inrush	27	–
	Sealed	5	3
Power Dissipation max. (W)		2	3

Dimensions (mm)

Contactor

YC1N-5/6, YC1K-5/6

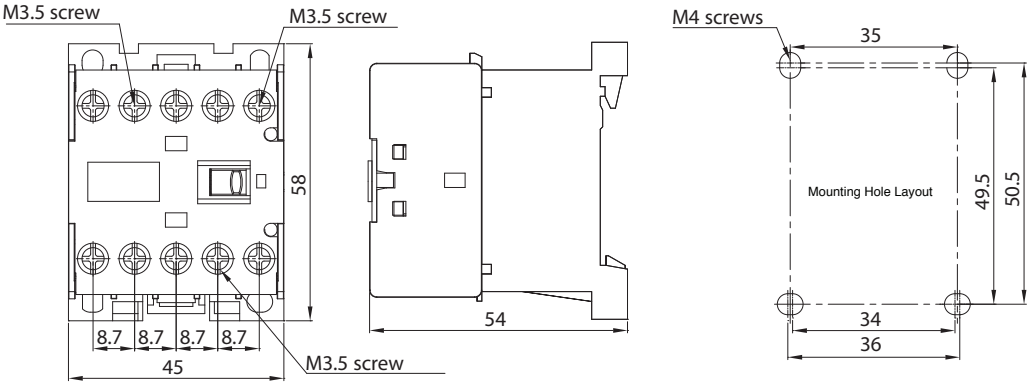

Accessories

Overload Relay YC9Z-RHU5

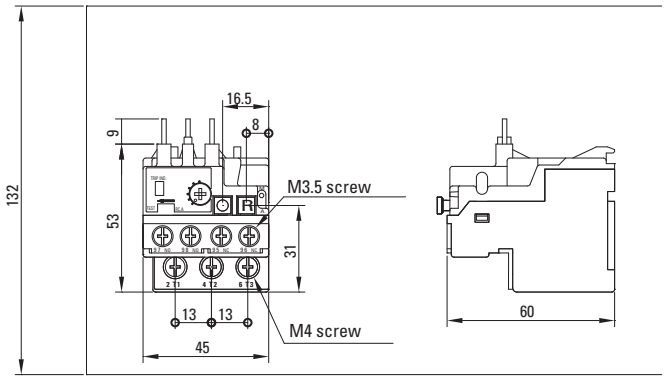

Top Mounting Auxiliary Contact YC9Z-CNA

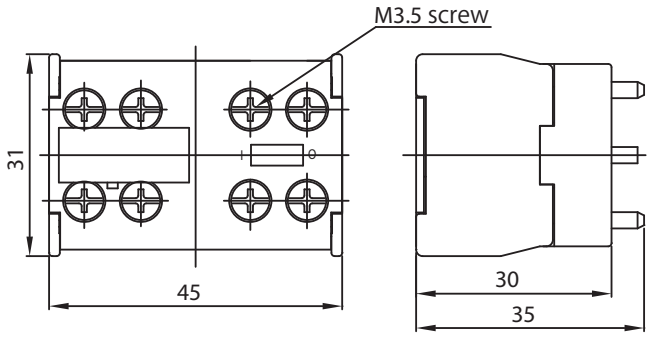

Mechanical Interlock YC9Z-CI6

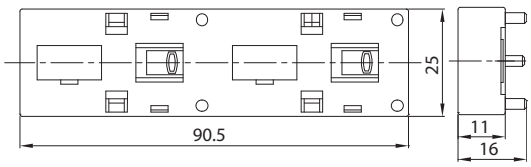

Electrical Diagrams

YC1N-5/6, YC1K-5/6 (1NO Aux.)

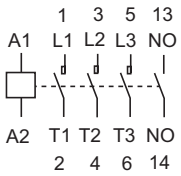

YC1N-5/6, YC1K-5/6 (1NC Aux.)

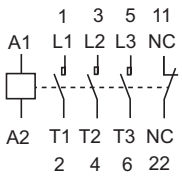

YC1U Series Contactor (AC Coil)

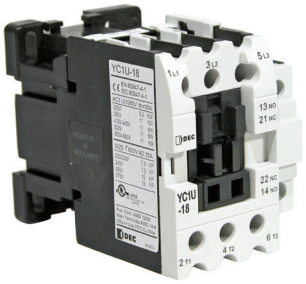

Key Features:

- 3-Phase with built in NO or NC Auxiliary contact
- Side Mount & Top mount snap-on Auxiliary contact blocks
- Comply with IEC 60945, UL508, CSA C22.2 standards

Part Number Key

YC1U – [9] [B] [A120]

Contactor Size*
9, 11, 16, 18, 27, 32, 38, 50, 65, 80

*see selection table for details

Coil Voltage
A24: 24V AC, 50/60Hz
A120: 120V AC, 50/60Hz
A240: 240V AC, 50/60Hz
A480: 480V AC, 50/60Hz

Auxilary Contact Arrangement
Blank: 1NO (size 9 - 16)
1NO-1NC (size 18 - 38)
2NO-2NC (size 50 - 80)
B: 1NC (size 9 - 16 only)

Part Numbers

Selection by Horsepower Rating

	Rated Power (Hp) per AC3 IEC 60947-4-1							Rated Power (Hp) per UL508 CSA C22.2						Auxilary Contact	Part Numbers	Coil Voltage
	1-Phase		3-Phase					1-Phase		3-Phase						
	110V	220V	220/240V	380/400V	415/440V	500V	660/690V	110/120V	220/240V	200/208V	230/240V	440/480V	575V			
	0.75	1.5	3.5	5.5	5.5	5.5	5.5	0.75	2	3	3	5	7.5	1NO	YC1U-9	A24: 24V AC A120: 120V AC A240: 240V AC A480: 480V AC
														1NC	YC1U-9B	
	0.75	1.5	4	7.5	7.5	7.5	7.5	1	2	5	5	7.5	10	1NO	YC1U-11	
														1NC	YC1U-11B	
	1	2	5.5	10	10	10	10	1.5	3	5	5	10	10	1NO	YC1U-16	
														1NC	YC1U-16B	
	1.5	3	7.5	15	15	15	15	2	3	7.5	7.5	15	15	1NO-1NC	YC1U-18	
	2	4	10	20	20	20	20	2	5	7.5	10	20	20	1NO-1NC	YC1U-27	
	2	5	12	20	20	25	25	3	5	10	15	25	30	1NO-1NC	YC1U-32	
	3	7	15	25	30	30	30	3	7.5	10	15	30	30	1NO-1NC	YC1U-38	
	4	8	20	35	35/40	40	40	5	10	15	20	40	50	2NO-2NC	YC1U-50	
	4	8	25	40	45/50	50	50	5	15	20	25	50	60	2NO-2NC	YC1U-65	
	5.5	10	30	50	54	60	60	7.5	15	25	30	60	60	2NO-2NC	YC1U-80	

Selection by Amp Rating

Rated Power (A) per AC3 IEC 60947-4-1							Rated Power (A) per UL508 CSA C22.2						Auxilary Contact	Part Numbers
1-Phase		3-Phase					1-Phase		3-Phase					
110V	220V	220/ 240V	380/ 400V	415/ 440V	500V	660/ 690V	110/ 120V	220/ 240V	200/ 208V	230/ 240V	440/ 480V	575V		
10.5	10.5	11.5	11	10/9	8	6	13.8	12	12	9.6	7.6	9	1NO	YC1U-9
													1NC	YC1U-9B
10.5	10.5	12	12	11	9	7	16	12	18	15.2	11	11	1NO	YC1U-11
													1NC	YC1U-11B
13.5	14	16	16	15	13	10	20	17	18	15.2	14	11	1NO	YC1U-16
													1NC	YC1U-16B
19.5	20.5	23	22	21	19	14	24	17	26	22	21	17	1NO-1NC	YC1U-18
30	30	30	30	28/27	26	21/20	24	28	25.3	28	27	22	1NO-1NC	YC1U-27
35	35	35	32	32	30	23/22	34	28	32.2	42	34	32	1NO-1NC	YC1U-32
39	39	39	38	38	33	25.2/24.2	34	40	32.2	42	40	32	1NO-1NC	YC1U-38
48	48	55	55	52	45	35	56	50	49	54	52	52	2NO-2NC	YC1U-50
50	50	65	64	64	55	45	56	68	63	68	65	62	2NO-2NC	YC1U-65
60	60	75	72	72/70	65	60	80	68	79	80	77	62	2NO-2NC	YC1U-80

+

Coil Voltage
A24: 24V AC A120: 120V AC A240: 240V AC A480: 480V AC

Selection by Kilowatt Rating

Rated Power (kW) per AC3 IEC 60947-4-1							Auxilary Contact	Part Numbers
1-Phase		3-Phase						
110V	220V	220/ 240V	380/ 400V	415/ 440V	500V	660/ 690V		
0.55	1.1	2.5	4	4	4	4	1NO	YC1U-9
							1NC	YC1U-9B
0.55	1.1	3	5.5	5.5	5.5	5.5	1NO	YC1U-11
							1NC	YC1U-11B
0.75	1.5	4	7.5	7.5	7.5	7.5	1NO	YC1U-16
							1NC	YC1U-16B
1.1	2.2	5.5	11	11	11	11	1NO-1NC	YC1U-18
1.5	3	7.5	15	15	15	15	1NO-1NC	YC1U-27
1.5	3.7	9	15	15	18.5	18.5	1NO-1NC	YC1U-32
2.2	5	11	18.5	22	22	22	1NO-1NC	YC1U-38
3	6	15	25	25/30	30	30	2NO-2NC	YC1U-50
3	6	18.5	30	33/37	37	37	2NO-2NC	YC1U-65
4	7.5	22	37	40	45	45	2NO-2NC	YC1U-80

+

Coil Voltage
A24: 24V AC A120: 120V AC A240: 240V AC A480: 480V AC

Accessories

Item	Contactor Size	Current Range	Part Number
Overload Relay 	9~27	0.1-0.16	YC9Z-RHU10AP16
		0.16-0.25	YC9Z-RHU10AP25
		0.25-0.4A	YC9Z-RHU10AP40
		0.35-0.5A	YC9Z-RHU10AP5
		0.45-0.63A	YC9Z-RHU10AP63
		0.55-0.8A	YC9Z-RHU10AP8
		0.75-1A	YC9Z-RHU10A1P0
		0.9-1.3A	YC9Z-RHU10A1P3
		1.1-1.6A	YC9Z-RHU10A1P6
		1.4-2A	YC9Z-RHU10A2P0
		1.8-2.5A	YC9Z-RHU10A2P5
		2.3-3.2A	YC9Z-RHU10A3P2
		2.9-4A	YC9Z-RHU10A4P0
		3.5-4.8A	YC9Z-RHU10A4P8
		4.5-6.3A	YC9Z-RHU10A6P3
		5.5-7.5A	YC9Z-RHU10A7P5
		7.2-10A	YC9Z-RHU10A10P
		9-12.5A	YC9Z-RHU10A12P
		11.3-16A	YC9Z-RHU10A16P
		15-20A	YC9Z-RHU10A20P
		21-25A	YC9Z-RHU10A25P
		24.5-30A	YC9Z-RHU10A30P
	27~38	15-20A	YC9Z-RHU10A220
		17.5-21.5A	YC9Z-RHU10A21P
		21-25A	YC9Z-RHU10A225
		24.5-30A	YC9Z-RHU10A230
		29-36A	YC9Z-RHU10A36P
		24.5-36A	YC9Z-RHU80A436
		35-47A	YC9Z-RHU80A447
	50~80	17-25A	YC9Z-RHU80A325
		24.5-36A	YC9Z-RHU80A336
		35-47A	YC9Z-RHU80A347
		45-60A	YC9Z-RHU80A360
		58-75A	YC9Z-RHU80A75P
		72-90A	YC9Z-RHU80A90P

Item		Part Number
Mechanical Interlock 	for YC1U-9,11, 16, 18, 27, 32, 38	YC9Z-CI18
	for YC1U-50, 65, 80	YC9Z-CI35

Item			Part Number
Side Mount Auxiliary Contact 	for YC1U-9 thru 38 1NO-1NC (1a1b)		YC9Z-CNA111SR
Surge Suppressor Unit	120V AC	RC	YC9Z-SS1E
		VARISTOR	YC9Z-SS2E
	240V AC	RC	YC9Z-SS1H
		VARISTOR	YC9Z-SS2H

Item	Form A (NO)	Form B (NC)	Part Number
Top Mount Auxiliary Contact  	–	2NC	YC9Z-CUA202
	1NO	1NC	YC9Z-CUA211
	2NO	–	YC9Z-CUA220
	2NO	2NC	YC9Z-CUA422
	3NO	1NC	YC9Z-CUA431
	4NO	–	YC9Z-CUA440

Item	Size	Coil Voltage	Part Number
Replacement Coils	9~27	24V AC	YC9Z-LCU22A24*
		110V AC	YC9Z-LCU22A110
		120V AC	YC9Z-LCU22A120*
		208V AC	YC9Z-LCU22A208
		220V AC	YC9Z-LCU22A220
		240V AC	YC9Z-LCU22A240*
		480V AC	YC9Z-LCU22A480*
	27~38	24V AC	YC9Z-LCU38A24*
		110V AC	YC9Z-LCU38A110
		120V AC	YC9Z-LCU38A120*
		208V AC	YC9Z-LCU38A208
		220V AC	YC9Z-LCU38A220
		240V AC	YC9Z-LCU38A240*
		480V AC	YC9Z-LCU38A480*
	50~80	24V AC	YC9Z-LCU80A24*
		110V AC	YC9Z-LCU80A110
		120V AC	YC9Z-LCU80A120*
		208V AC	YC9Z-LCU80A208
		220V AC	YC9Z-LCU80A220
		240V AC	YC9Z-LCU80A240*
		480V AC	YC9Z-LCU80A480*

* Standard stock coil voltages.

Specifications

General Specifications

	YC1U-9	YC1U-11	YC1U-16	YC1U-18	YC1U-27	YC1U-32	YC1U-38	YC1U-50	YC1U-65	YC1U-80
Contact Configuration	3A1a , 3A1b			3A1a1b	3A1a1b			3A2a2b		
Making Capacity (A)	10xIe			10xIe	10xIe			10xIe		
Breaking Capacity (A)	8xIe			8xIe	8xIe			8xIe		
Switching Frequency (Operations/ Hr)	1200			1200	1200			1200		
Electrical Life (Operations)	1,000,000			1,000,000	1,000,000			500,000	1,000,000	1,000,000
Mechanical Life (Operations)	5,000,000			5,000,000	5,000,000			5,000,000		
Operating Temperature	-20°C ~ 55°C									
Storage Temperature	-40°C ~ 70°C									
Weight (Kg)	0.3			0.4	0.7			1.3		

Note: Ie = rated operational current

Main Pole Contact Specifications

	YC1U-9	YC1U-11	YC1U-16	YC1U-18	YC1U-27	YC1U-32	YC1U-38	YC1U-50	YC1U-65	YC1U-80
Insulation Voltage, Ui (V)	IEC: 660 UL: 600			IEC: 660 UL: 600	IEC: 1000 UL: 600			IEC: 660 UL: 600		
Operational Voltage, Ue (V)	IEC: 660 UL: 600			IEC: 660 UL: 600	IEC: 690 UL: 600			IEC: 660 UL: 600		
Thermal Current, I_{th} (A)	IEC: 25 UL: 24			IEC: 32 UL: 35	IEC: 50 UL: 45	IEC: 60 UL: 50	IEC: 60 UL: 55	IEC: 70 UL: 72	IEC: 80/100 UL: 85	IEC: 100 UL: 104
Short Circuit Current Rating (KA)	5			5	5			10		
NEMA Size Equivalent (approx.)	0	0+	0+	1+	1	2	2	2+	2+	3+

Auxilary Contacts Specifications

			YC1U-9	YC1U-11	YC1U-16	YC1U-18	YC1U-27	YC1U-32	YC1U-38	YC1U-50	YC1U-65	YC1U-80
Contact Configuration			1a or 1b			1a1b	1a1b			1a1b		
Insulation Voltage, Ui (V)			IEC: 600 UL: 600			IEC: 660 UL: 600	IEC: 690 UL: 600			IEC: 660 UL: 600		
Operational Voltage, Ue (V)			IEC: 600 UL: 600			IEC: 600 UL: 600	IEC: 690 UL: 600			IEC: 660 UL: 600		
Thermal Current, I_{th} (A)			AC: 10 DC: 2.5									
Contact Rating Code Designatior UL			A600 Q300									
Operational Current (A) IEC 60947-5-1 UL 508	AC-15 A600	120V	6									
		240V	3									
		380V	1.9									
		480V	1.5									
		500V	1.4									
		600V	1.2									
	DC-13 Q300	125V	0.55									
		250V	0.27									

Coil Specifications

		YC1U-9	YC1U-11	YC1U-16	YC1U-18	YC1U-27	YC1U-32	YC1U-38	YC1U-50	YC1U-65	YC1U-80
Pick-up Voltage	50-60Hz	70%			75%	75%			75%		
Power Consumption, max. (VA)	Inrush	70			70	150 (cos ø = 0.7)			280		
	Sealed	12			12	15 (cos ø = 0.3)			32		
Power Dissipation max. (W)		2-4			2-4	5			6-7.5		

Dimensions (mm)

Contactors

YC1U-9, YC1U-11, YC1U-16

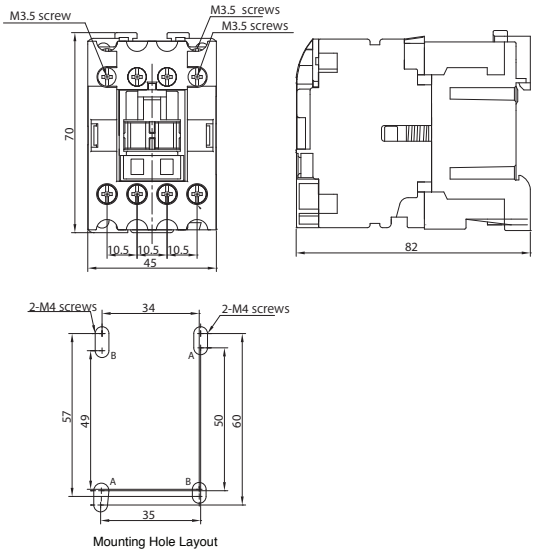

YC1U-18

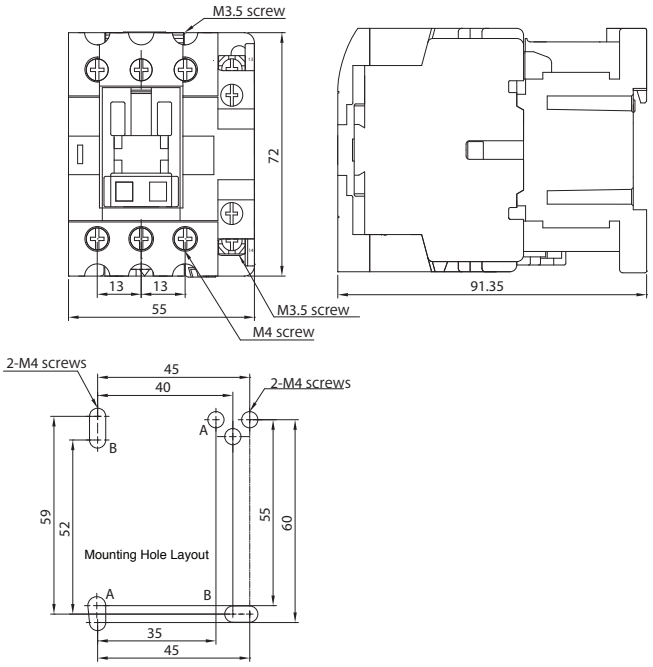

YC1U-27, YC1U-32, YC1U-38

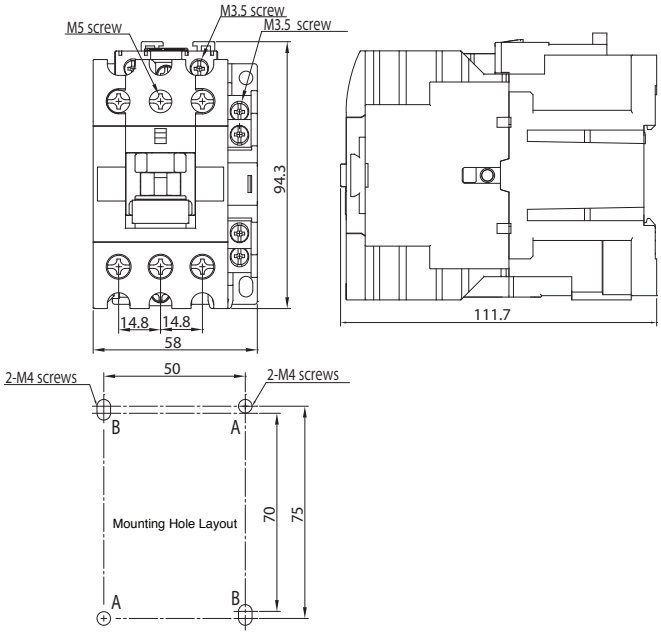

YC1U-50, YC1U-65, YC1U-80

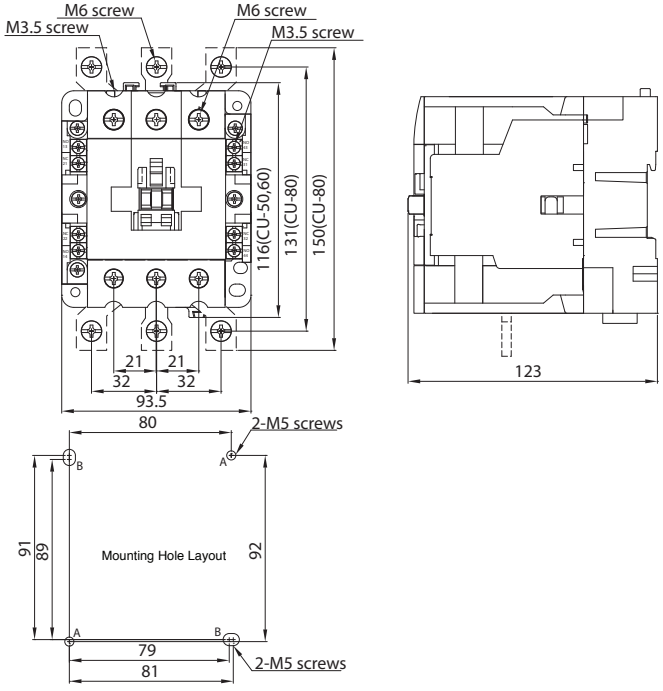

Dimensions (mm)

Overload Relays

YC9Z-RHU10 (for YC1U-9, 11, 16, 18)

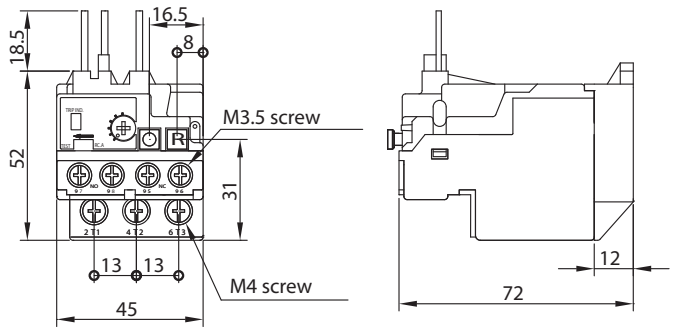

YC9Z-RHU10 (for YC1U-27, 32, 38, 40)

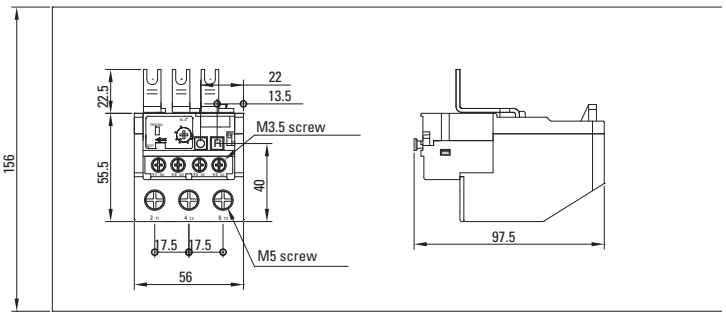

YC9Z-RHU80 (for YC1U-50, 65, 80)

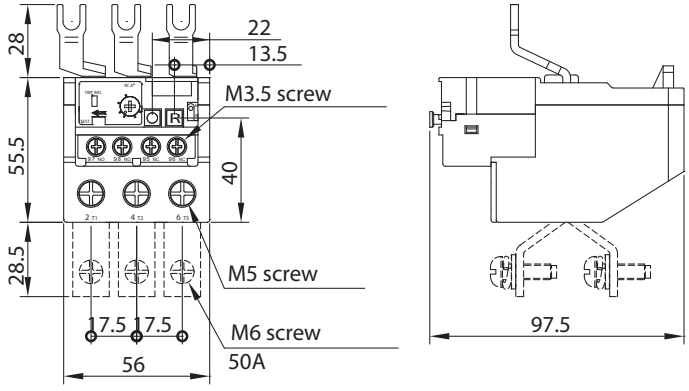

Mechanical Interlocks

YC9Z-CI18 (for YC1U-9, 11, 16, 27, 32, 38)

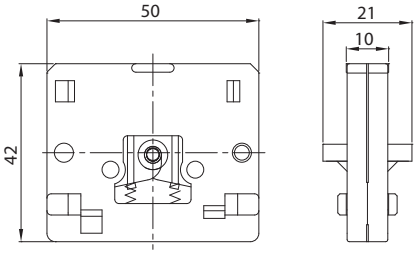

YC9Z-CI135 (for YC1U-50, 65, 80)

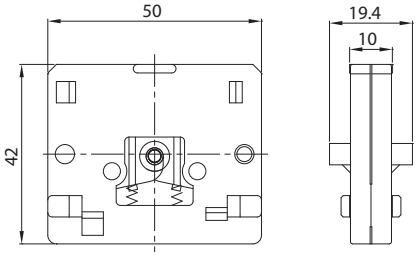

Top Mounting Auxiliary Contacts

YC9Z-CUA2

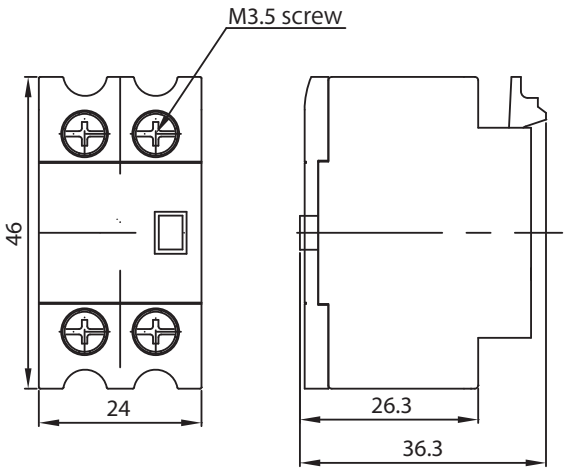

YC9Z-CUA4

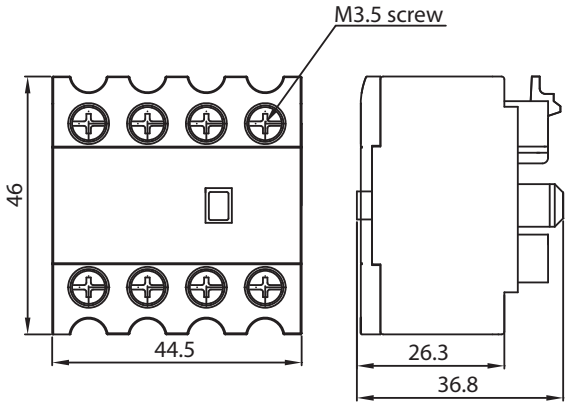

Side Mounting Auxiliary Contact

YC9Z-CNA111SR (1a1b for YC1U-9 to YC1U-38)

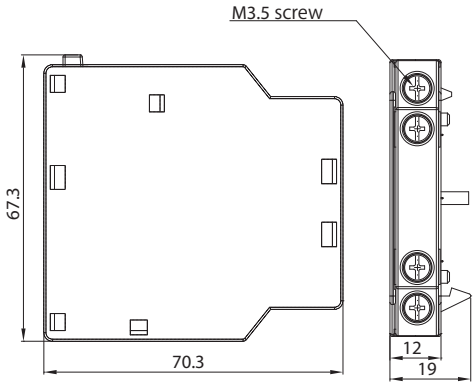

Electrical Diagrams

YC1U-9/11/16 (1NO Aux.)

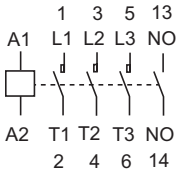

YC1U-9/11/16 (1NC Aux.)

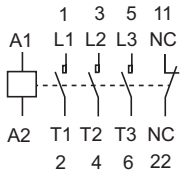

YC1U-18 to YC1U-38 (1NO-1NC Aux.)

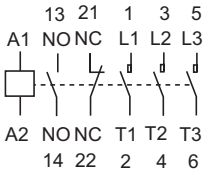

YC1N Series Contactors (AC Coil)

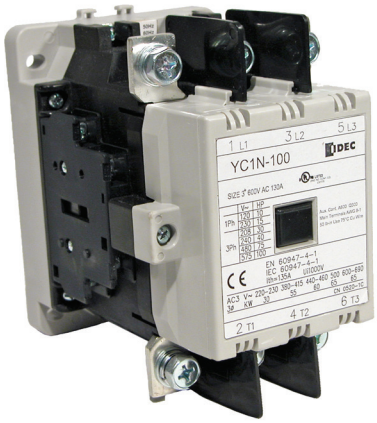

Key Features:

- 3-Phase Contactor with 2NO & 2NC Auxillary Contacts
- Side Mount Auxiliary contact blocks
- Comply with IEC 60945, UL508, CSA C22.2 standards

Part Number Key

YC1N – 125 A120

Contactor Size*
100, 125, 150, 180, ~~220, 300~~

Coil Voltage
A24: 24V AC, 50/60Hz
A120: 120V AC, 50/6-Hz
A240: 240V AC, 50/60Hz
A480: 480V AC, 50/60Hz

*see selection table for details

Part Numbers

Selection by Horsepower Rating

	Rated Power (Hp) per AC3 IEC 60947-4-1					Rated Power (Hp) per UL508 CSA C22.2						Auxilary Contact	Part Numbers		Coil Voltage
	3-Phase					1-Phase		3-Phase							
	220/240V	380/400V	415/440V	500V	660/690V	110/120V	220/240V	200/208V	230/240V	440/480V	575V				
	40	80	80	85	85	10	15	30	40	75	100	2NO-2NC	YC1N-100	+	A24: 24V AC A120: 120V AC A240: 240V AC A480: 480V AC
	54	100	100	100	100	–	–	40	50	100	100		YC1N-125		
	60	110	110	125	136	–	–	50	75	125	125		YC1N-150		
	75	125	136	150	150	–	–	60	75	150	150		YC1N-180		
	85	160	170	180	180	–	–	75	100	200	200		YC1N-220		
	120	220	220	220	270	–	–	100	125	250	250		YC1N-300		

Selection by Amp Rating

Rated Power (A) per AC3 IEC 60947-4-1					Rated Power (A) per UL508 CSA C22.2						Auxilary Contact	Part Numbers	Coil Voltage
3-Phase					1-Phase		3-Phase						
220/240V	380/400V	415/440V	500V	660/690V	110/120V	220/240V	200/208V	230/240V	440/480V	575V			
115	115	105	93	75	100	68	92	104	96	99	2NO-2NC	YC1N-100	A24: 24V AC A120: 120V AC A240: 240V AC A480: 480V AC
138	138	138	105	85	–	–	120	130	124	99		YC1N-125	
150	147	138	129	107	–	–	150	154	156	125		YC1N-150	
182	179	182	156	118	–	–	177	192	180	144		YC1N-180	
225	225	220	190	140	–	–	221	248	240	192		YC1N-220	
300	300	300	250	220	–	–	285	312	302	242		YC1N-300	

+

Selection by Kilowatt Rating

Rated Power (kW) per AC3 IEC 60947-4-1					Auxilary Contact	Part Numbers	Coil Voltage
3-Phase							
220/240V	380/400V	415/440V	500V	660/690V			
30	60	60	65	65	2NO-2NC	YC1N-100	A24: 24V AC A120: 120V AC A240: 240V AC A480: 480V AC
40	75	75	75	75		YC1N-125	
45	80	80	90	100		YC1N-150	
55	95	100	110	110		YC1N-180	
65	120	132	132	132		YC1N-220	
90	160	160	160	220		YC1N-300	

+

Accessories

Item	Size	Current Range	Part Number
Overload Relay	100, 125	65~95A	YC9Z-RHN100A95P
		85~125A	YC9Z-RHN100A125
		110~160A	YC9Z-RHN100A160
	150	65~95A	YC9Z-RHN150A95P
		85~125A	YC9Z-RHN150A125
		110~160A	YC9Z-RHN150A160
	180	110~160A	YC9Z-RHN180A160
		125~185A	YC9Z-RHN180A185
	220, 300	110~160A	YC9Z-RHN220A160
		125~185A	YC9Z-RHN220A185

Item			Part Number
Mechanical Interlock 			YC9Z-CI100
Side Mount Auxiliary Contact 	1a1b		YC9Z-CNA111BC
Surge Suppressor Unit	120V AC	RC	YC9Z-SS1E
		VARISTOR	YC9Z-SS2E
	240V AC	RC	YC9Z-SS2H
		VARISTOR	YC9Z-SS1H

Item	Contactor Size	Coil Voltage	Part Number
Replacement Coils	100, 125	24VAC	YC9Z-LCN125A24*
		110VAC	YC9Z-LCN125A110
		120VAC	YC9Z-LCN125A120*
		208VAC	YC9Z-LCN125A208
		220VAC	YC9Z-LCN125A220
		240VAC	YC9Z-LCN125A240*
		480VAC	YC9Z-LCN125A480*
	150, 180	24VAC	YC9Z-LCN180A24*
		110VAC	YC9Z-LCN180A110
		120VAC	YC9Z-LCN180A120*
		208VAC	YC9Z-LCN180A208
		220VAC	YC9Z-LCN180A220
		240VAC	YC9Z-LCN180A240*
		480VAC	YC9Z-LCN180A480*
	220, 300	24VAC	YC9Z-LCN300A24*
		110VAC	YC9Z-LCN300A110
		120VAC	YC9Z-LCN300A120*
		208VAC	YC9Z-LCN300A208
		220VAC	YC9Z-LCN300A220
		240VAC	YC9Z-LCN300A240*
		480VAC	YC9Z-LCN300A480*

* Standard stock coil voltages.

Specifications

General Specifications

	YC1N-100	YC1N-125	YC1N-150	YC1N-180	YC1N-220	YC1N-300
Contact Configuration	3A2a2b					
Making Capacity (A)	10xIe					
Breaking Capacity (A)	8xIe					
Switching Frequency (Operations/ Hr)	1,200					
Electrical Life (Operations)	1,000,000					
Mechanical Life (Operations)	5,000,000					
Operating Temperature	-20°C ~ 55°C					
Storage Temperature	-40°C ~ 70°C					
Weight (Kg)	2.2		4.1		6.7	

Note: Ie = rated operational current

Main Pole Contact Specifications

	YC1N-100	YC1N-125	YC1N-150	YC1N-180	YC1N-220	YC1N-300
Insulation Voltage, Ui (V)	IEC: 1000 UL: 600		IEC: 1000 UL:600		IEC: 1000 UL:600	
Operational Voltage, Ue (V)	IEC: 690 UL:600		IEC: 690 UL:600		IEC: 690 UL:600	
Thermal Current, I_{th} (A)	IEC: 135 UL: 130	IEC/UL: 150	IEC/UL: 200	IEC/UL: 240	IEC/UL: 260	IEC/UL: 350
Short Circuit Current Rating (KA)	10		10		18	
NEMA Size Equivalent (approx.)	3	4	4	4	4	5

Auxiliary Contacts Specifications

			YC1N-100	YC1N-125	YC1N-150	YC1N-180	YC1N-220	YC1N-300
Insulation Voltage, Ui (V)			IEC: 690 UL:600					
Operational Voltage, Ue (V)			IEC: 690 UL: 600					
Thermal Current, I_{th} (A)			AC: 10 DC: 2.5					
Contact Rating Code Designatior UL			A600 Q300					
Operational Current (A) IEC 60947-5-1 UL 508	AC-15 A600	120V	6					
		240V	3					
		380V	1.9					
		480V	1.5					
		500V	1.4					
		600V	1.2					
	DC-13 Q300	125V	0.55					
		250V	0.27					

Coil Specifications

		YC1N-100/YC1N-125	YC1N-150/YC1N-180	YC1N-220/YC1N-300
Pick-up Voltage	50/60Hz	75%	75%	75%
Drop-out Voltage		60%	45%	45%
Power Consumption, max. (VA)	Inrush	560	700	300
	Sealed	63	88	63
Power Dissipation max. (W)		6-11.6	25-35	9-15

Dimensions (mm)

Contactors

YC1N-100, YC1N-125

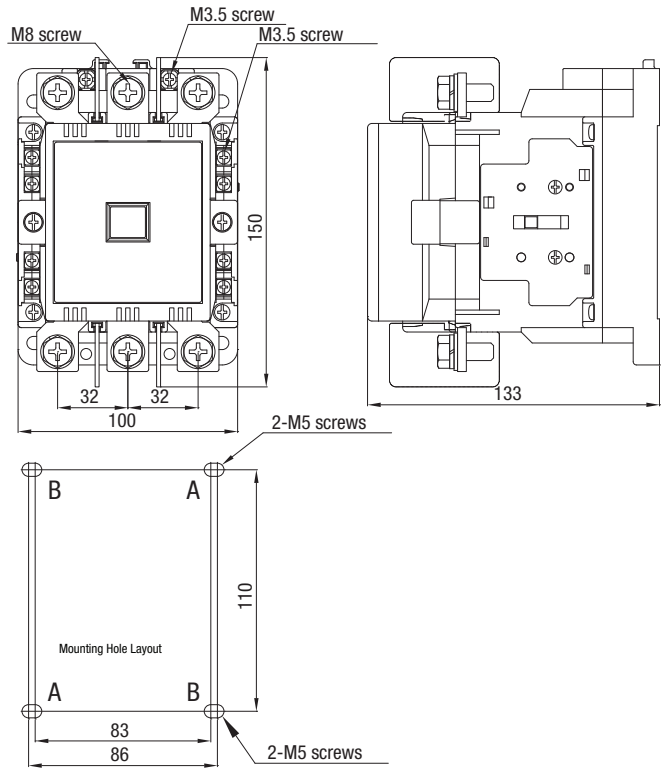

YC1N-150, YC1N-180

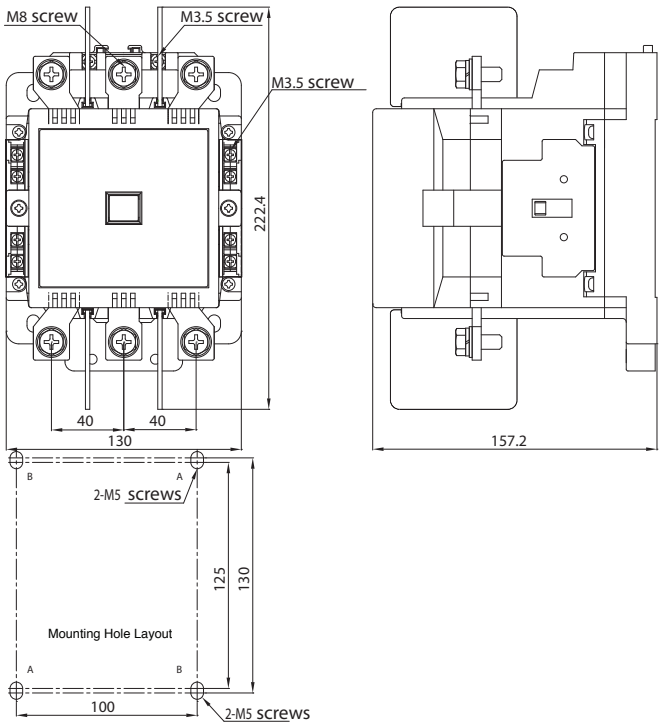

YC1N-220, YC1N-300

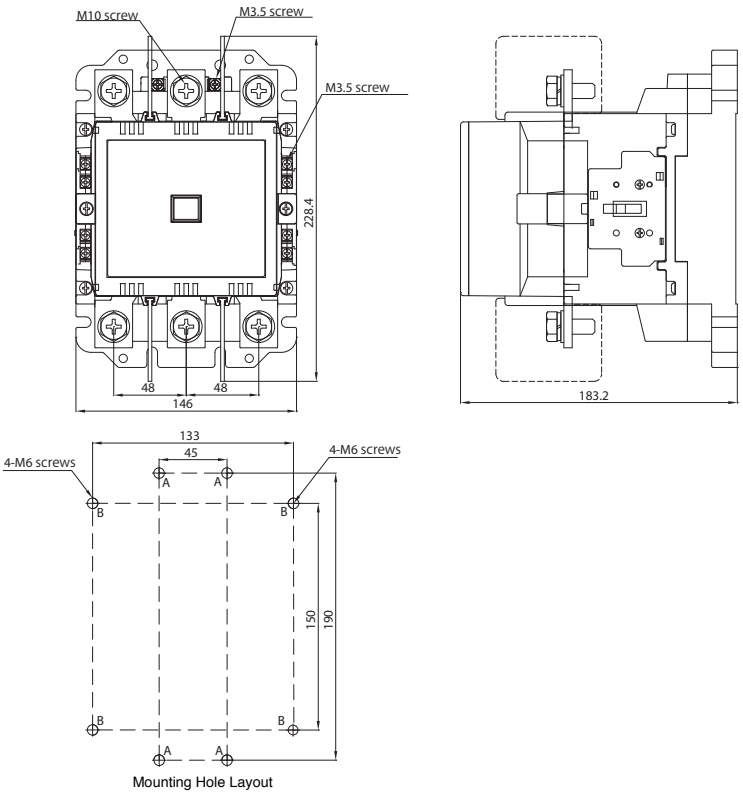

Dimensions (mm)

Overload Relay

YC9Z-RHN100

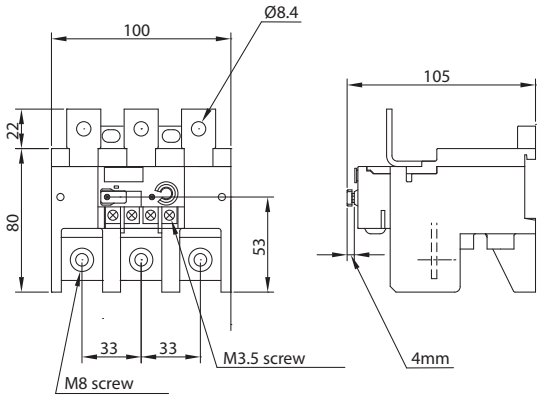

YC9Z-RHN150

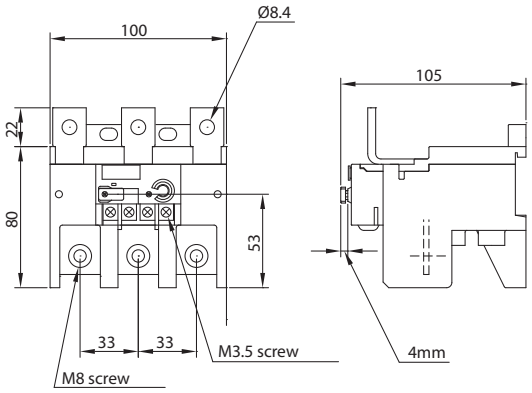

YC9Z-RHN180

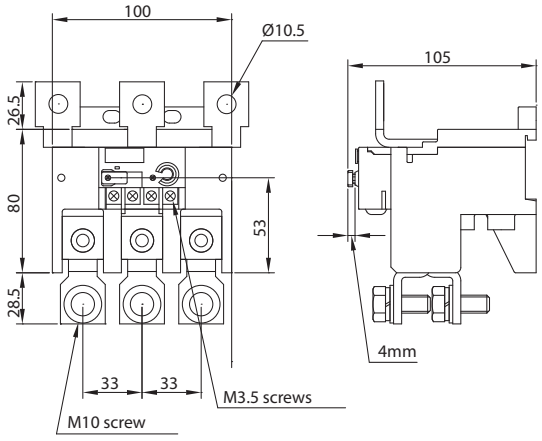

YC9Z-RHN220

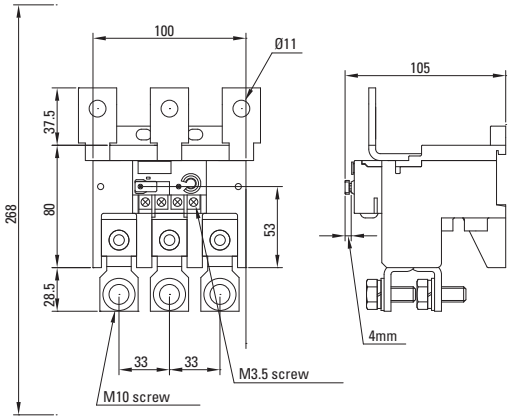

Mechanical Interlock YC9Z-CI100

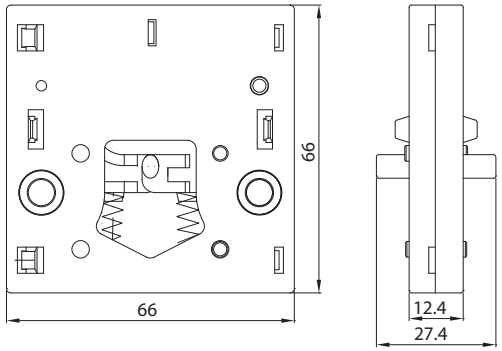

Side Mounting Auxilary Contact YC9Z-CNA111BC (1a1b)

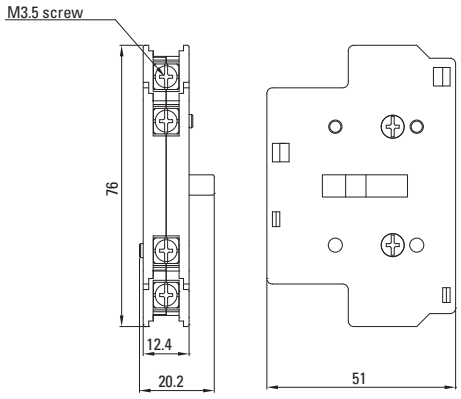

Electrical Diagram

YC1N-100 to YC1N-300

