BGA616

Silicon Germanium Broadband MMIC Amplifier

RF & Protection Devices



Edition 2011-09-02

**Published by Infineon Technologies AG,
81726 München, Germany**

**© Infineon Technologies AG 2011.
All Rights Reserved.**

Attention please!

The information herein is given to describe certain components and shall not be considered as a guarantee of characteristics.

Terms of delivery and rights to technical change reserved.

We hereby disclaim any and all warranties, including but not limited to warranties of non-infringement, regarding circuits, descriptions and charts stated herein.

Information

For further information on technology, delivery terms and conditions and prices please contact your nearest Infineon Technologies Office (**www.infineon.com**).

Warnings

Due to technical requirements components may contain dangerous substances. For information on the types in question please contact your nearest Infineon Technologies Office.

Infineon Technologies Components may only be used in life-support devices or systems with the express written approval of Infineon Technologies, if a failure of such components can reasonably be expected to cause the failure of that life-support device or system, or to affect the safety or effectiveness of that device or system. Life support devices or systems are intended to be implanted in the human body, or to support and/or maintain and sustain and/or protect human life. If they fail, it is reasonable to assume that the health of the user or other persons may be endangered.

BGA616, Silicon Germanium Broadband MMIC Amplifier

Revision History: 2011-09-02, Rev. 2.1

Previous Version: 2003-04-16

Page	Subjects (major changes since last revision)
All	New Chip Version with integrated ESD protection
5	Electrical Characteristics slightly changed
7-8	Figures updated
All	Document layout change

Trademarks

SIEGET® is a registered trademark of Infineon Technologies AG.

1 Silicon Germanium Broadband MMIC Amplifier

Feature

- Cascadable 50 Ω-gain block
- 3 dB-bandwidth: DC to 2.7 GHz with 19.0 dB typical gain at 1.0 GHz
- Compression point P_{-1dB} = 18 dBm at 2.0 GHz
- Noise figure $F_{50\Omega}$ = 2.60 dB at 2.0 GHz
- Absolute stable
- 70 GHz f_T - Silicon Germanium technology
- 1 kV HBM ESD protection (Pin-to-Pin)
- Pb-free (RoHS compliant) package

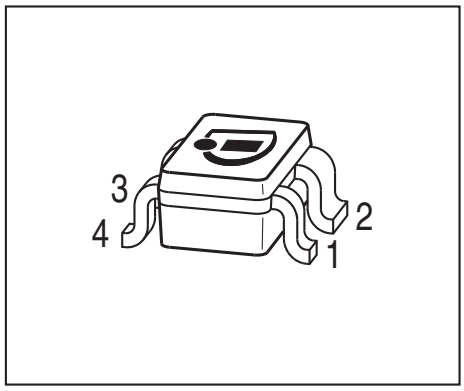

SOT343

Applications

- Driver amplifier for GSM/PCS/SCDMA/UMTS
- Broadband amplifier for SAT-TV & LNBs
- Broadband amplifier for CATV

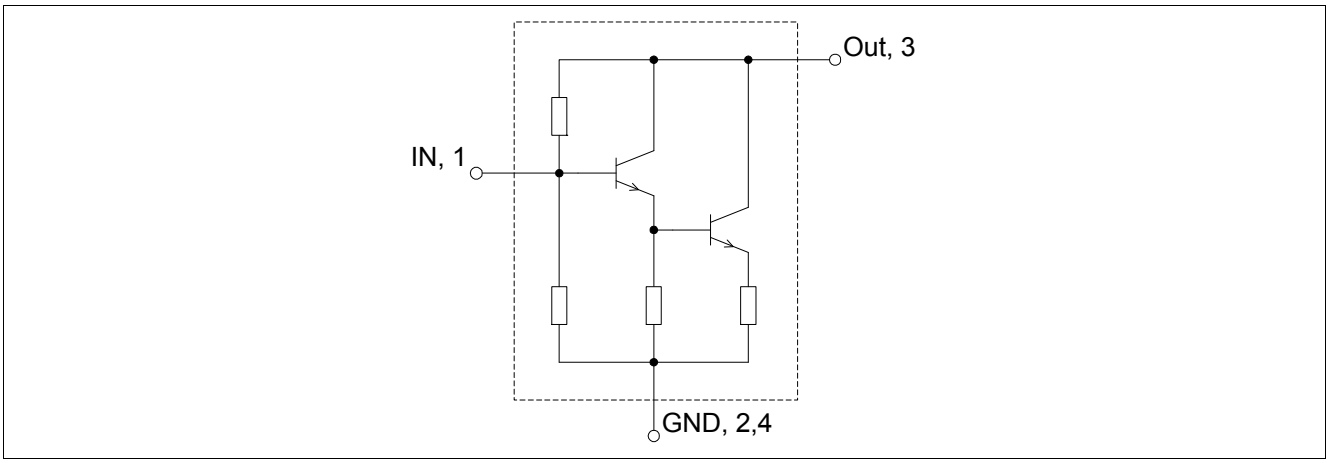

Figure 1 Pin connection

Description

The BGA616 is a broadband matched general purpose MMIC amplifier in a Darlington configuration. It is optimized for a typical supply current of 60 mA.

The BGA616 is based on Infineon Technologies' B7HF Silicon Germanium technology.

Type	Package	Marking
BGA616	SOT343	BPs

*Note: **ESD:** Electrostatic discharge sensitive device, observe handling precaution*

Maximum Ratings

Table 1 Maximum ratings

Parameter	Symbol	Limit Value	Unit
Device voltage	V_D	4.5	V
Device current	I_D	80	mA
Current into pin In	I_{in}	0.7	mA
Input power[1)]	P_{in}	10	dBm
Total power dissipation, T_S < 78 °C[2)]	P_{tot}	360	mW
Junction temperature	T_J	150	°C
Ambient temperature range	T_A	-65... 150	°C
Storage temperature range	T_{STG}	-65... 150	°C
ESD capability all pins (HBM: JESD22-A114)	V_{ESD}	1000	V

1) Valid for $Z_S = Z_L = 50\ \Omega$, V_{CC} = 6 V, $R_{Bias} = 33\ \Omega$

2) T_S is measured on the ground lead at the soldering point

Note: All Voltages refer to GND-Node

Thermal resistance

Table 2 Thermal resistance

Parameter	Symbol	Value	Unit
Junction - soldering point[1)]	R_{thJS}	200	K/W

1) For calculation of R_{thJA} please refer to Application Note Thermal Resistance

2 Electrical Characteristics

Electrical characteristics at T_A = 25 °C (measured in test circuit specified in **Figure 2**)

V_{CC} = 6 V, R_{Bias} = 33 Ω, Frequency = 2 GHz, unless otherwise specified

Table 3 Electrical Characteristics

Parameter	Symbol	Values			Unit	Note / Test Condition
		Min.	Typ.	Max.		
Insertion power gain	$\|S_{21}\|^2$		20.0		dB	f = 0.1 GHz
			19.0		dB	f = 1 GHz
			18.0		dB	f = 2 GHz
Noise figure (Z_S = 50 Ω)	$F_{50\Omega}$		2.2		dB	f = 0.1 GHz
			2.5		dB	f = 1 GHz
			2.6		dB	f = 2 GHz
Output power at 1 dB gain compression	P_{-1dB}		18		dBm	
Output third order intercept point	OIP_3		29		dBm	
Input return loss	RL_{in}		15		dB	
Output return loss	RL_{out}		15		dB	
Total device current	I_D		60		mA	

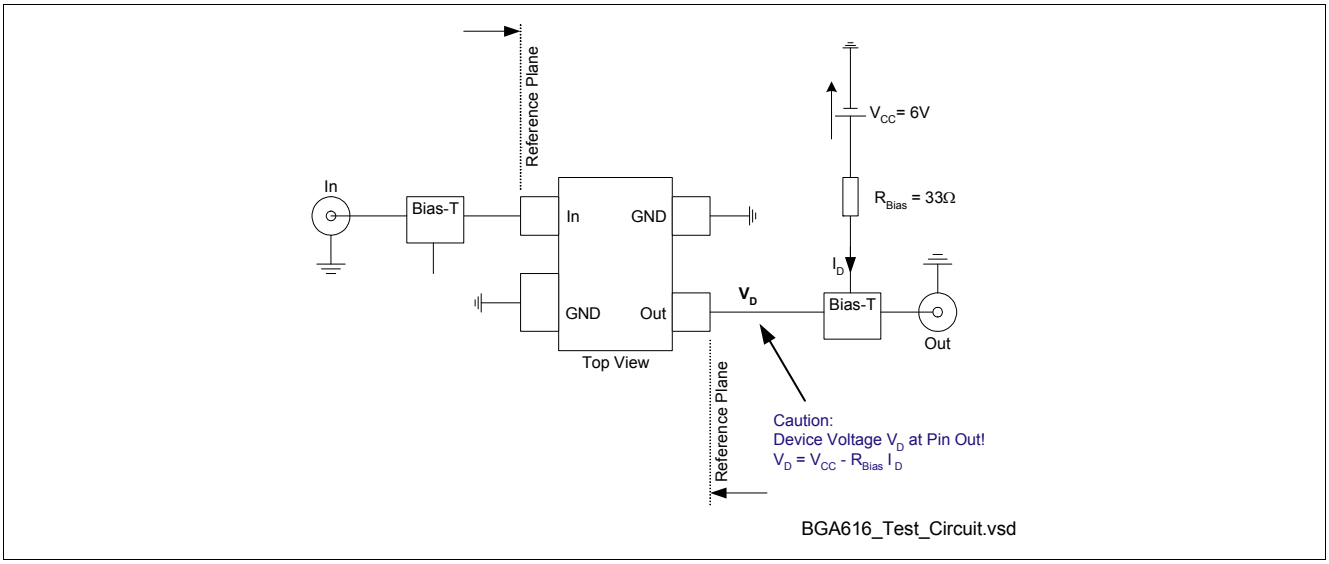

Figure 2 Test Circuit for Electrical Characteristics and S-Parameter

3 Measured Parameters

Power Gain $|S_{21}|^2$, G_{ma} = f(f)
V_{CC} = 6V, R_{Bias} = 33Ω, I_C = 60mA

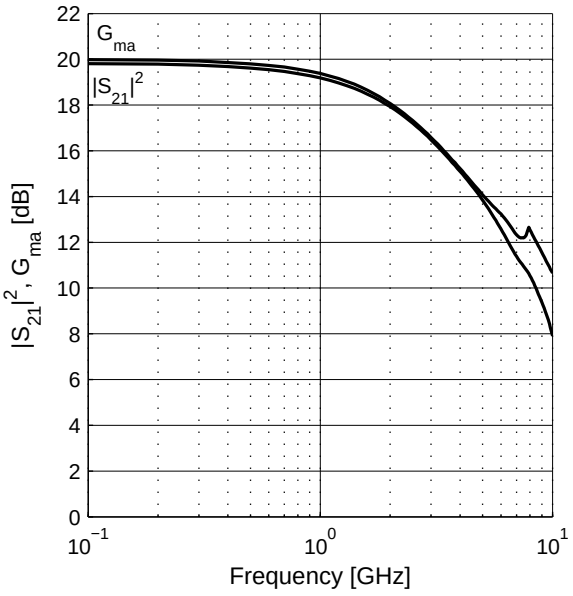

Matching $|S_{11}|$, $|S_{22}|$ = f(f)
V_{CC} = 6V, R_{Bias} = 33Ω, I_C = 60mA

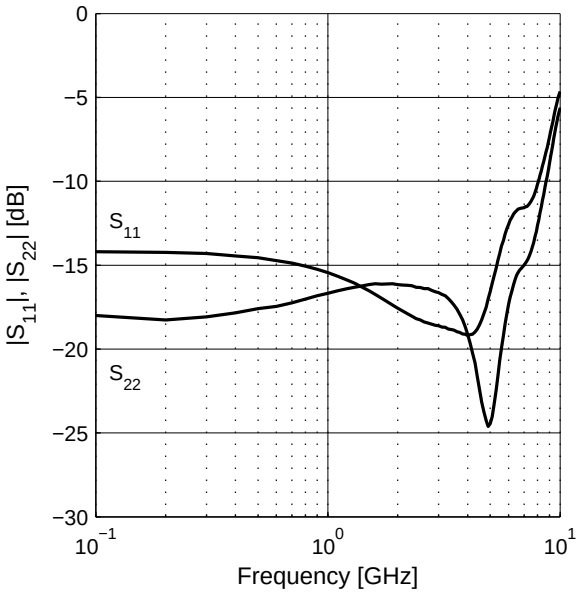

Power Gain $|S_{21}|$ = f(I_D)
f = parameter in GHz

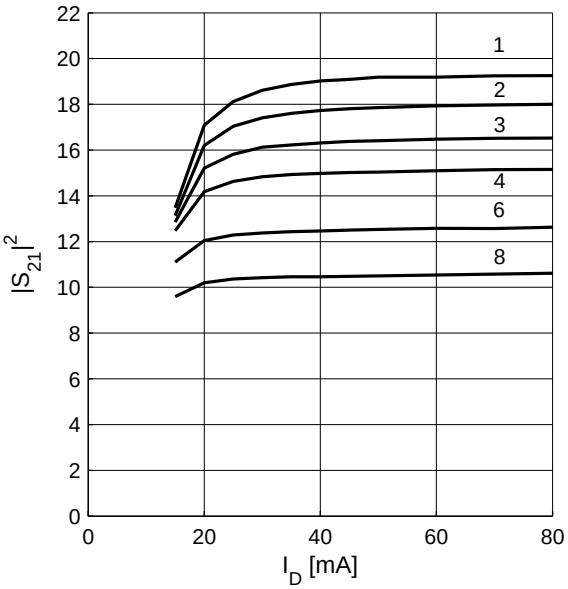

Output Compression Point
P_{-1dB} = f(I_D), f = 2GHz

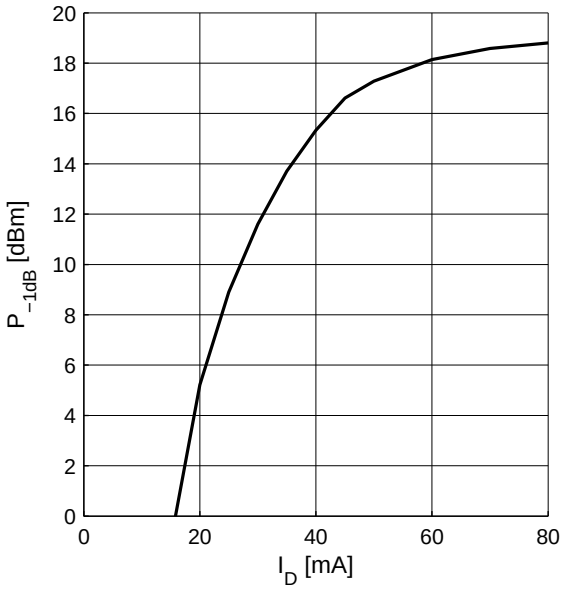

Device Current $I_D = f(V_{CC})$
R_{Bias} = parameter in Ω

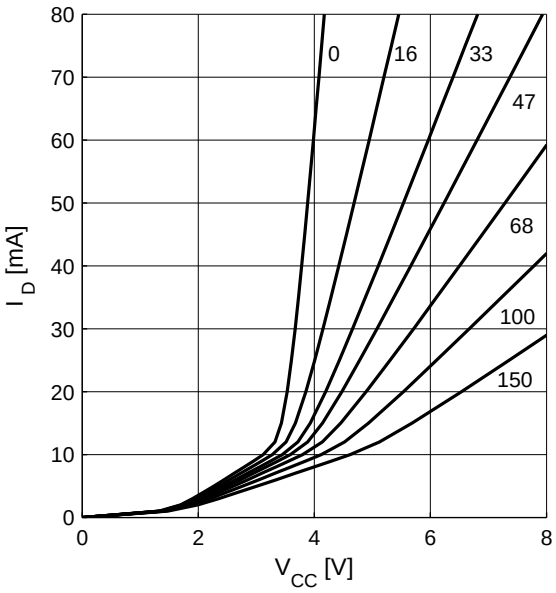

Device Current $I_D = f(T_A)$
V_{CC} = 6V, R_{Bias} = parameter in Ω

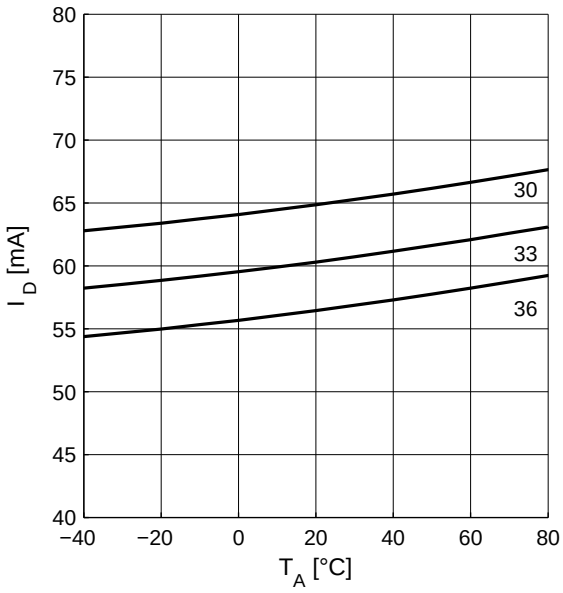

Noise figure F = f(f)
V_{CC} = 6V, R_{Bias} = 33Ω, Z_S = 50Ω
T_A = parameter in °C

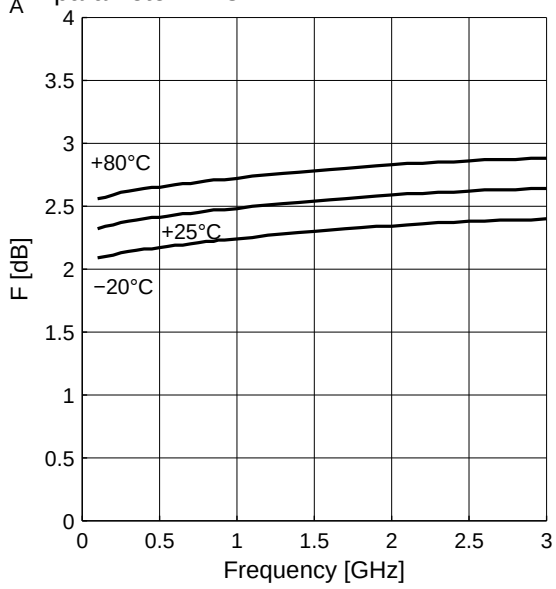

4 Package Information

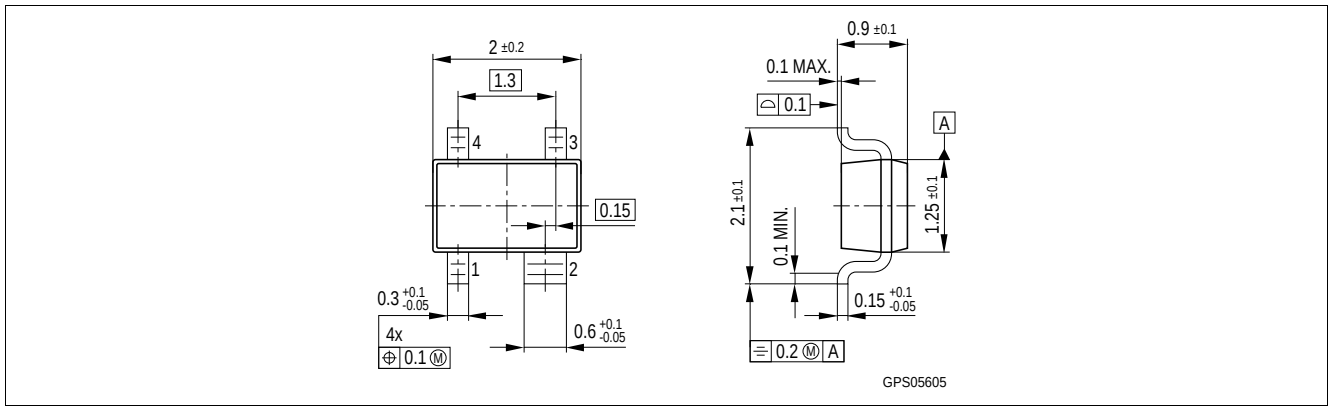

Figure 3 Package Outline SOT343

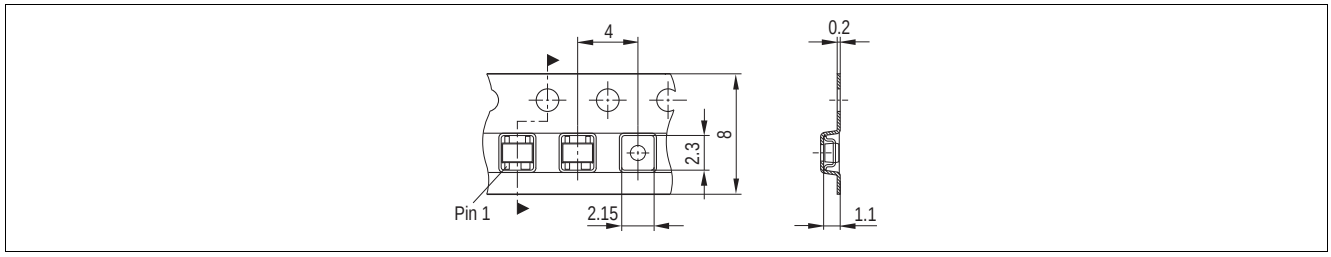

Figure 4 Tape for SOT343