BGA855N6

Low Noise Amplifier for Lower L-Band GNSS Applications

Features

- Operating frequencies: 1164 - 1300 MHz
- Insertion power gain: 17.8dB
- Low noise figure: 0.60 dB
- High linearity performance IIP3: 0 dBm
- Low current consumption: 4.8 mA
- Ultra small TSNP-6-10 leadless package (footprint: 0.7 x 1.1 mm²)
- RF output internally matched to 50 Ohm
- Only one external matching component needed
- Specifically designed for:
  - L2/L5 GPS Signals
  - E5a/E5b/E6 Galileo Signals
  - G2/G3 Glonass Signals
  - B2/B3 Beidou Signals

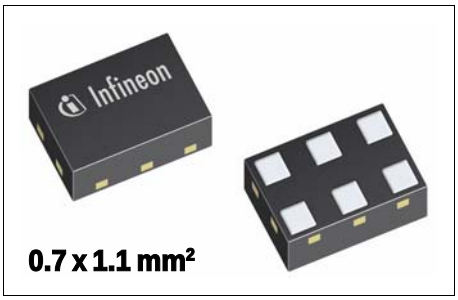

Application

The BGA855N6 is designed to enhance GNSS signal sensitivity for band L2/L5 especially for very high accuracy. Besides GPS L5 and L2, the GNSS LNA also covers Galileo E5a, E5b, E6, Glonass G3, G2 and Beidou B3 and B2 bands. The high linearity performance of BGA855N6 ensures best sensitivity for the operation in 4G & 5G NSA configurations.

Product Validation

Qualified for industrial applications according to the relevant tests of JEDEC47/20/22

Block diagram

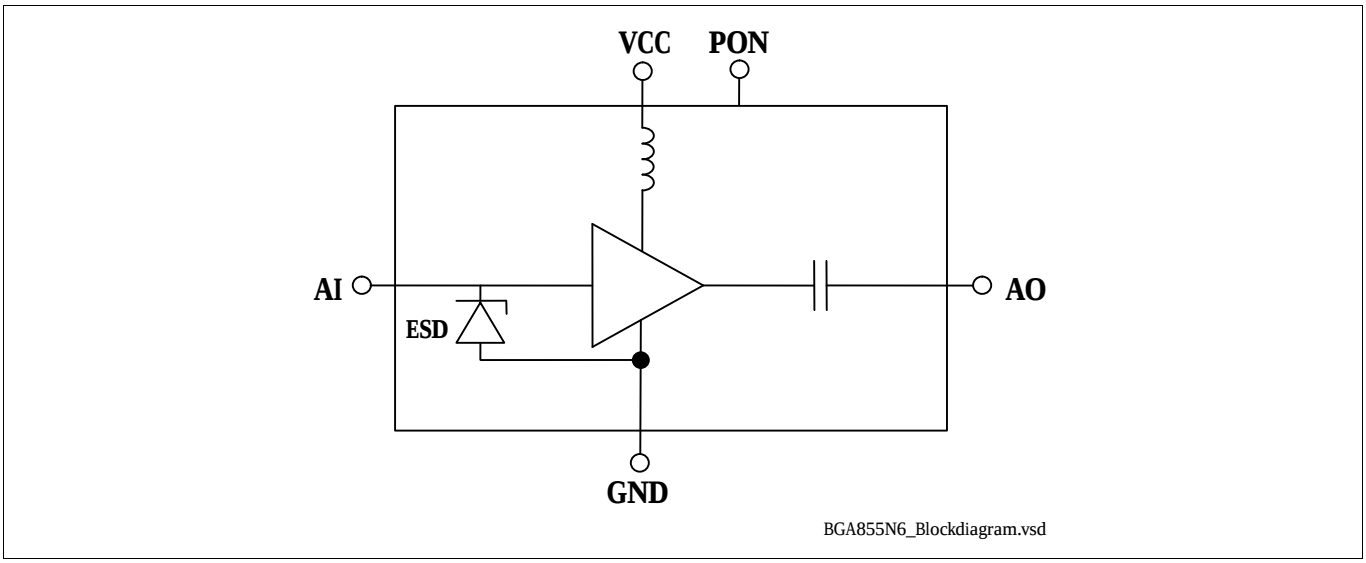

Table of Contents

Table of Contents 2
1 Features 3
2 Maximum Ratings 5
3 Electrical Characteristics 6
4 Application Information 9
5 Package Information 10

1 Features

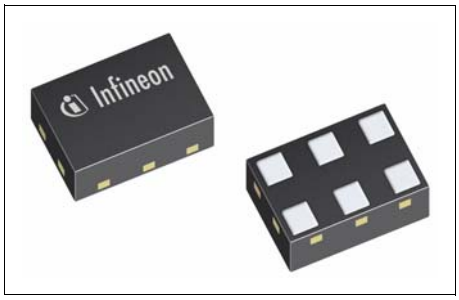

- Insertion power gain: 17.8 dB
- Low noise figure: 0.60 dB
- Low current consumption: 4.8 mA
- High linearity performance IIP3: 0 dBm
- Operating frequencies: 1164 - 1300 MHz
- Supply voltage: 1.1 V to 3.3 V
- Ultra small TSNP-6-10 leadless package (footprint: 0.7 x 1.1 mm^2)
- B9HF Silicon Germanium technology
- RF output internally matched to 50 Ohm
- Only one external matching component needed
- 2kV HBM ESD protection (including AI-pin)
- Pb-free (RoHS compliant) package
- Specifically designed for:
  - L2/L5 GPS Signals
  - E5a/E5b/E6 Galileo Signals
  - G2/G3 Glonass Signals
  - B2/B3 Beidou Signals

RoHS

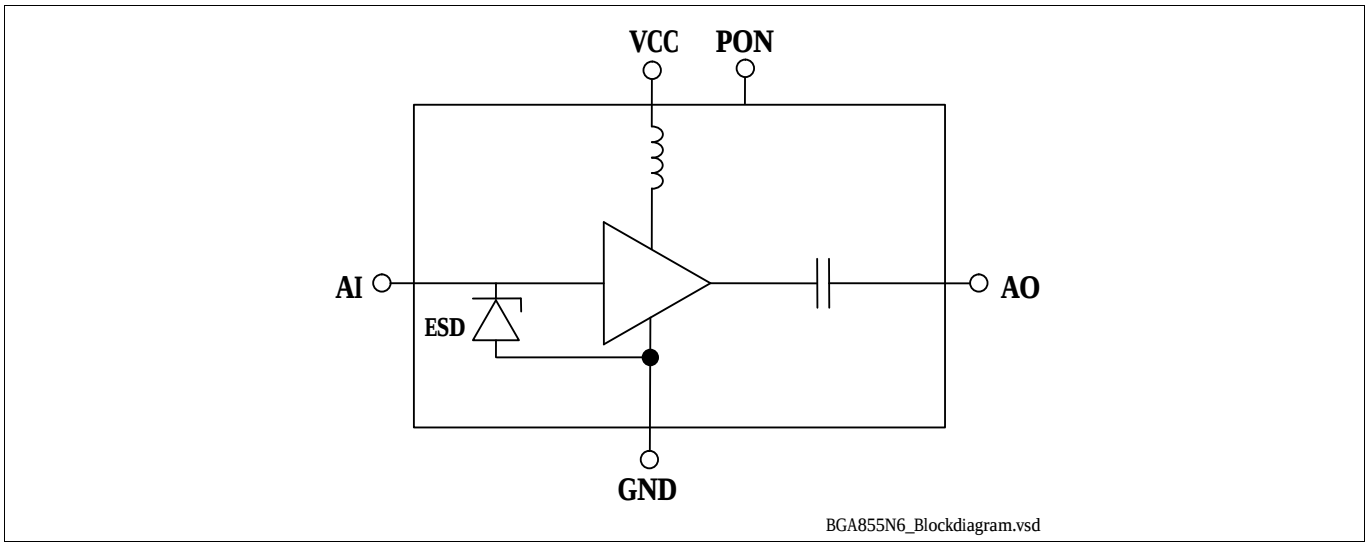

Figure 1 Block Diagram

Product Name	Marking	Package
BGA855N6	6	TSNP-6-10

Features

Description

The BGA855N6 is a front-end low noise amplifier for GPS L5 and L2, Galileo E5a, E5b, E6, Glonass G3, G2 and Beidou B3 and B2 bands for a frequency range from 1164 MHz to 1300 MHz. The LNA provides 17.8 dB gain and 0.60 dB noise figure at a current consumption of 4.8 mA in the application configuration described in **Chapter 4**. The BGA855N6 is based upon Infineon Technologies' B9HF Silicon Germanium technology. It operates from 1.1 V to 3.3 V supply voltage (device optimized for 1.8V operation / also prepared to support 1.2V and 2.8V operation). OFF-state can be enabled by PON pin.

Pin Definition and Function

Table 1 Pin Definition and Function

Pin No.	Name	Function
1	GND	Ground
2	VCC	DC supply
3	AO	LNA output
4	GND	Ground
5	AI	LNA input
6	PON	Power On Control

2 Maximum Ratings

Table 2 Maximum Ratings

Parameter	Symbol	Values			Unit	Note or Test Condition
		Min.	Typ.	Max.		
Voltage at pin VCC[1]	V_{CC}	-0.3	–	3.6	V	–
Voltage at pin AI	V_{AI}	-0.3	–	0.9	V	–
Voltage at pin AO	V_{AO}	-0.3	–	V_{CC} + 0.3	V	–
Voltage at pin PON	V_{PON}	-0.3	–	V_{CC} + 0.3	V	–
Voltage at pin GND	V_{GND}	-0.3	–	0.3	V	–
Current into pin VCC	I_{CC}	–	–	16	mA	–
RF input power	P_{IN}	–	–	+25	dBm	–
Total power dissipation, T_S < 148 °C[2]	P_{tot}	–	–	60	mW	–
Junction temperature	T_J	–	–	150	°C	–
Ambient temperature range	T_A	-40	–	85	°C	–
Storage temperature range	T_{STG}	-55	–	150	°C	–
ESD capability all pins, HBM[3]	V_{ESD_HBM}	-2000	-	+2000	V	–

1) All voltages refer to GND-Node unless otherwise noted
2) T_S is measured on the ground lead at the soldering point
3) Human Body Model ANSI/ESDA/JEDEC JS-001 (R = 1.5kΩ, C = 100pF)

Attention: Stresses above the max. values listed here may cause permanent damage to the device. Maximum ratings are absolute ratings; exceeding only one of these values may cause irreversible damage to the integrated circuit. Exposure to conditions at or below absolute maximum rating but above the specified maximum operation conditions may affect device reliability and life time. Functionality of the device might not be given under these conditions.

3 Electrical Characteristics

Table 3 Electrical Characteristics V_{CC} = 1.2V[1)]

T_A = 25 °C, V_{CC} = 1.2 V, V_{PON} = 1.2 V, f = 1164 - 1300 MHz

Parameter	Symbol	Values			Unit	Note or Test Condition
		Min.	Typ.	Max.		
Supply voltage	V_{CC}	1.1	1.2	3.3	V	–
Supply current	I_{CC}	–	4.4	5.4	mA	ON Mode
		–	0.2	3	µA	OFF Mode
Power on voltage	V_{PON}	0.8	–	V_{CC}	V	ON Mode
		0	–	0.4	V	OFF Mode
Supply current	I_{PON}	–	1.5	3	µA	ON Mode
		–	–	1	µA	OFF Mode
Insertion power gain f = 1214MHz	$\|S_{21}\|^2$	16.6	17.6	18.6	dB	–
Noise figure[2)] f = 1214 MHz, Z_S = 50 Ω	NF	–	0.60	1.10	dB	–
Input return loss[3)] f = 1214 MHz	RL_{IN}	8	11	–	dB	–
Output return loss[3)] f = 1214 MHz	RL_{OUT}	12	20	–	dB	–
Reverse isolation[3)] f = 1214 MHz	$1/\|S_{12}\|^2$	19	22	–	dB	–
Power on time[4)7)]	t_S	–	3	5	µs	OFF to ON Mode
Inband input 1dB-compression point, f = 1214 MHz[3)]	IP_{1dB}	-18	-14	–	dBm	–
Inband input 3rd-order intercept point[3)5)] f_1 = 1214 MHz, f_2 = f_1 +/- 1 MHz	IIP_3	-6	-1	–	dBm	–
Out of band input 3rd-order intercept point[6)7)] f_1 = 1850 MHz, f_2 = 2500 MHz	IIP_{3OOB}	-4	1	–	dBm	–
Stability[7)]	k	> 1	–	–		f = 20 MHz ... 10 GHz

1) Based on the application described in **Chapter 4**
2) PCB losses are subtracted
3) Verification based on AQL; not 100% tested in production
4) LNA Gain changed to 90% of final gain value (in dB)
5) Input power = -30 dBm for each tone
6) Input power = -25 dBm for each tone
7) Guaranteed by device design; not tested in production

Table 4 Electrical Characteristics V_{CC} = 1.8V[1)]

T_A = 25 °C, V_{CC} = 1.8 V, V_{PON} = 1.8 V, f = 1164 - 1300 MHz

Parameter	Symbol	Values			Unit	Note or Test Condition
		Min.	Typ.	Max.		
Supply voltage	V_{CC}	1.1	1.8	3.3	V	–
Supply current	I_{CC}	–	4.8	5.8	mA	ON Mode
		–	0.2	3	µA	OFF Mode
Power on voltage	V_{PON}	0.8	–	V_{CC}	V	ON Mode
		0	–	0.4	V	OFF Mode
Supply current	I_{PON}	–	2.5	7.5	µA	ON Mode
		–	–	1	µA	OFF Mode
Insertion power gain f = 1214MHz	$\|S_{21}\|^2$	16.8	17.8	18.8	dB	–
Noise figure[2)] f = 1214 MHz, Z_S = 50 Ω	NF	–	0.60	1.10	dB	–
Input return loss[3)] f = 1214 MHz	RL_{IN}	9	12	–	dB	–
Output return loss[3)] f = 1214 MHz	RL_{OUT}	12	20	–	dB	–
Reverse isolation[3)] f = 1214 MHz	$1/\|S_{12}\|^2$	19	22	–	dB	–
Power on time[4)7)]	t_S	–	3	5	µs	OFF to ON Mode
Inband input 1dB-compression point, f = 1214 MHz[3)]	IP_{1dB}	-15	-11	–	dBm	–
Inband input 3rd-order intercept point[3)5)] f_1 = 1214 MHz, f_2 = f_1 +/- 1 MHz	IIP_3	-5	0	–	dBm	–
Out of band input 3rd-order intercept point[6)7)] f_1 = 1850 MHz, f_2 = 2500 MHz	IIP_{3OOB}	-4	1	–	dBm	–
Stability[7)]	k	> 1	–	–		f = 20 MHz ... 10 GHz

1) Based on the application described in **Chapter 4**
2) PCB losses are subtracted
3) Verification based on AQL; not 100% tested in production
4) LNA Gain changed to 90% of final gain value (in dB)
5) Input power = -30 dBm for each tone
6) Input power = -25 dBm for each tone
7) Guaranteed by device design; not tested in production

Table 5 Electrical Characteristics V_{CC} = 2.8V[1)]

T_A = 25 °C, V_{CC} = 2.8 V, V_{PON} = 2.8 V, f = 1164 - 1300 MHz

Parameter	Symbol	Values			Unit	Note or Test Condition
		Min.	Typ.	Max.		
Supply voltage	V_{CC}	1.1	2.8	3.3	V	–
Supply current	I_{CC}	–	5.4	6.4	mA	ON Mode
		–	0.2	3	µA	OFF Mode
Power on voltage	V_{PON}	0.8	–	V_{CC}	V	ON Mode
		0	–	0.4	V	OFF Mode
Supply current	I_{PON}	–	5	10	µA	ON Mode
		–	–	1	µA	OFF Mode
Insertion power gain f = 1214MHz	$\|S_{21}\|^2$	16.9	17.9	18.9	dB	–
Noise figure[2)] f = 1214 MHz, Z_S = 50 Ω	NF	–	0.60	1.10	dB	–
Input return loss[3)] f = 1214 MHz	RL_{IN}	10	13	–	dB	–
Output return loss[3)] f = 1214 MHz	RL_{OUT}	12	20	–	dB	–
Reverse isolation[3)] f = 1214 MHz	$1/\|S_{12}\|^2$	19	22	–	dB	–
Power on time[4)7)]	t_S	–	3	5	µs	OFF to ON Mode
Inband input 1dB-compression point, f = 1214 MHz[3)]	IP_{1dB}	-12	-8	–	dBm	–
Inband input 3rd-order intercept point[3)5)] f_1 = 1214 MHz, f_2 = f_1 +/- 1 MHz	IIP_3	-4	1	–	dBm	–
Out of band input 3rd-order intercept point[6)7)] f_1 = 1850 MHz, f_2 = 2500 MHz	IIP_{3OOB}	-3	2	–	dBm	–
Stability[7)]	k	> 1	–	–		f = 20 MHz ... 10 GHz

1) Based on the application described in **Chapter 4**
2) PCB losses are subtracted
3) Verification based on AQL; not 100% tested in production
4) LNA Gain changed to 90% of final gain value (in dB)
5) Input power = -30 dBm for each tone
6) Input power = -25 dBm for each tone
7) Guaranteed by device design; not tested in production

4 Application Information

Application Board Configuration

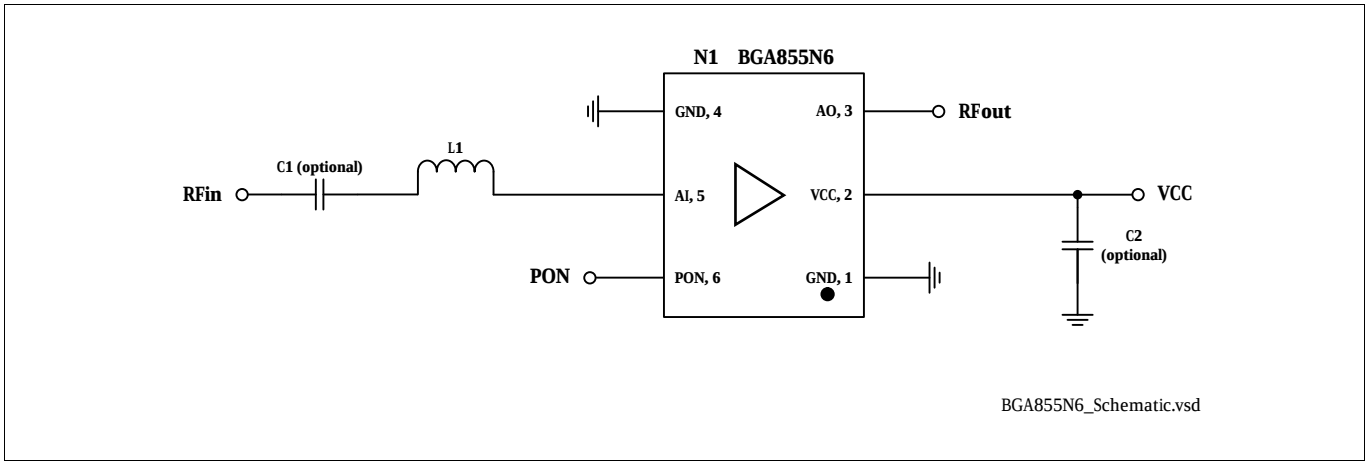

Figure 2 Application Schematic BGA855N6

Table 6 Bill of Materials

Name	Value	Package	Manufacturer	Function
C1 (optional)	1nF	0402	Various	DC block [1)]
C2 (optional)	≥ 1nF	0402	Various	RF bypass [2)]
L1	9.4nH	0402	Murata LQW15 type	Input matching
N1	BGA855N6	TSNP-6-10	Infineon	SiGe LNA

1) DC Block might be realized with pre-filter in GNSS application

2) RF bypass recommended to mitigate power supply noise

5 Package Information

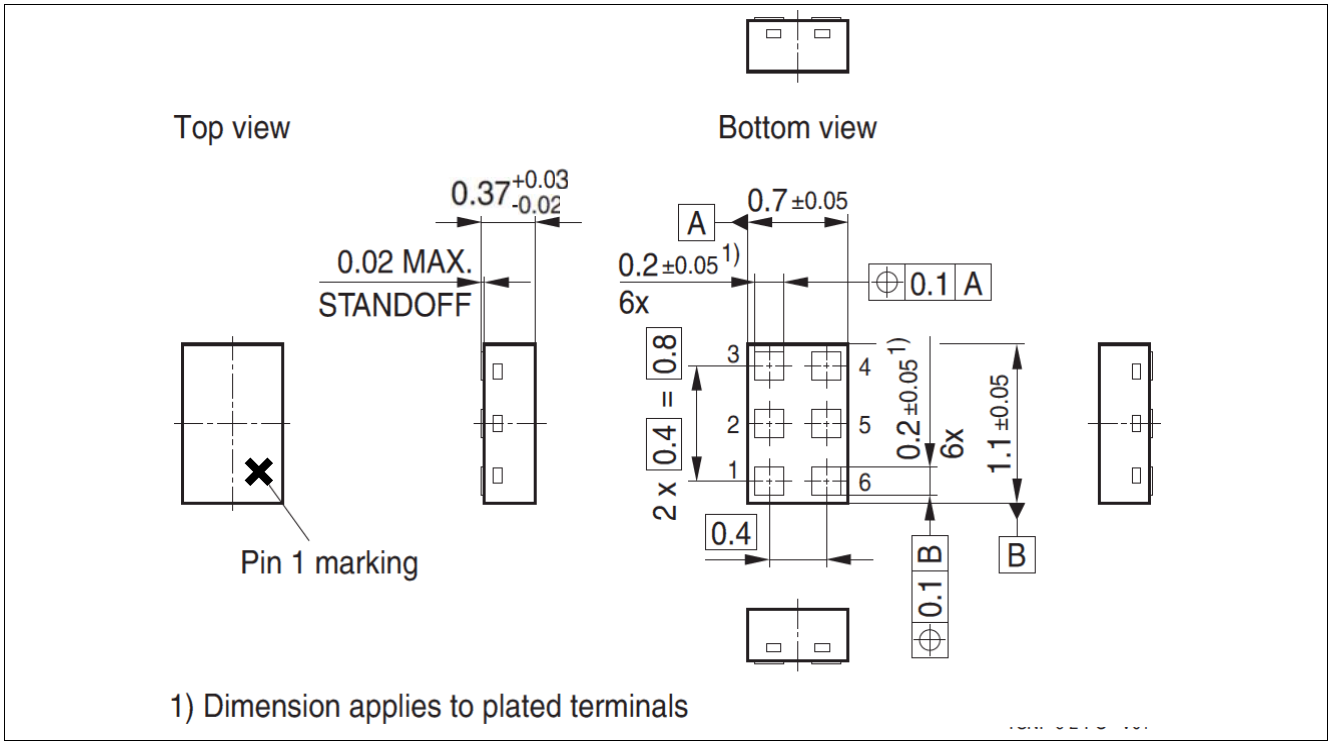

Figure 3 TSNP-6-10 Package Outline (top, side and bottom views)

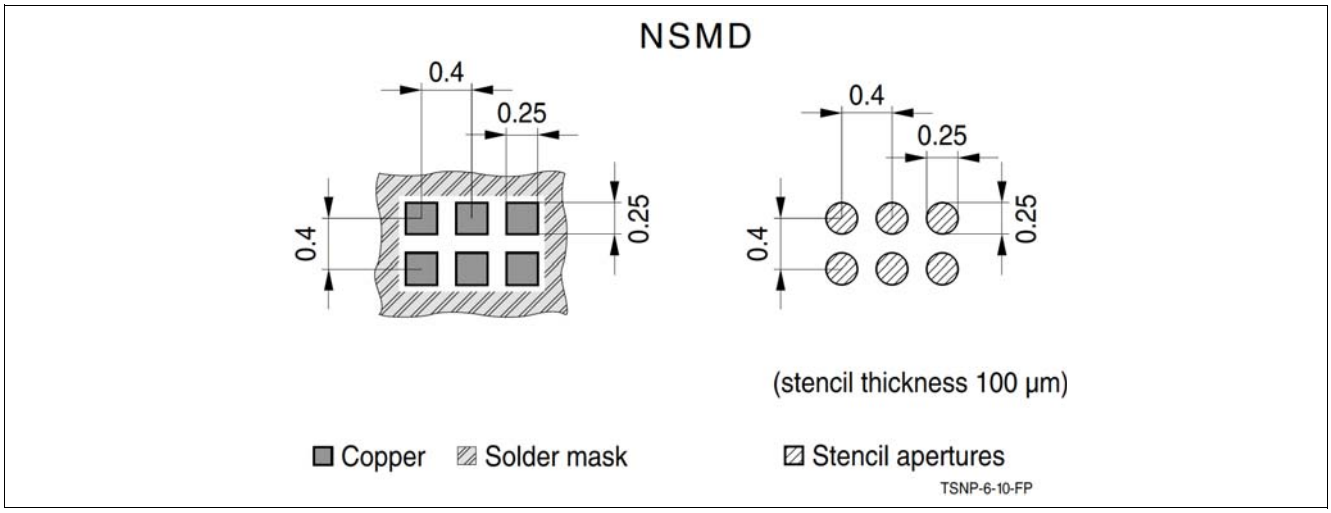

Figure 4 Footprint Recommendation TSNP-6-10

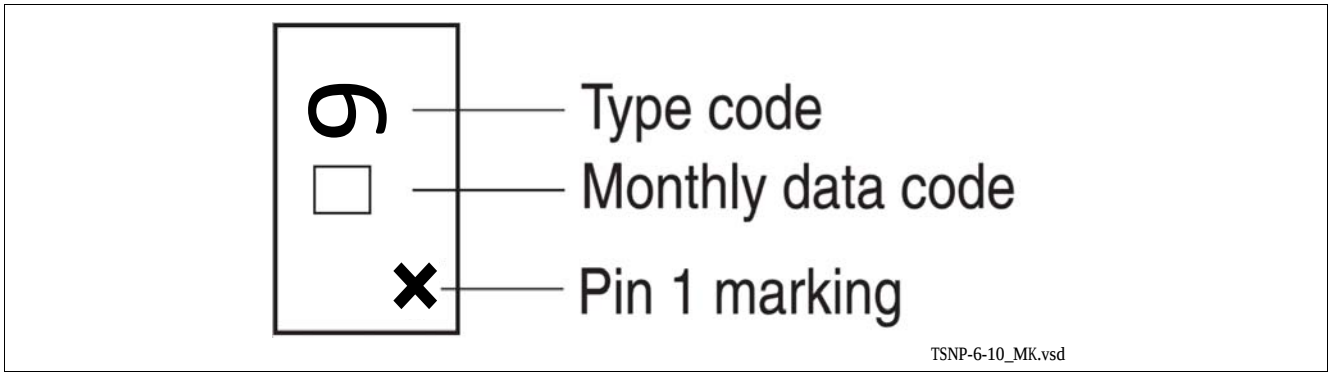

Figure 5 Marking Layout TSNP-6-10 (top view)

Month	2015	2016	2017	2018	2019	2020	2021	2022	2023	2024	2025	2026
01	a	p	A	P	a	p	A	P	a	p	A	P
02	b	q	B	Q	b	q	B	Q	b	q	B	Q
03	c	r	C	R	c	r	C	R	c	r	C	R
04	d	s	D	S	d	s	D	S	d	s	D	S
05	e	t	E	T	e	t	E	T	e	t	E	T
06	f	u	F	U	f	u	F	U	f	u	F	U
07	g	v	G	V	g	v	G	V	g	v	G	V
08	h	x	H	X	h	x	H	X	h	x	H	X
09	j	y	J	Y	j	y	J	Y	j	y	J	Y
10	k	z	K	Z	k	z	K	Z	k	z	K	Z
11	l	2	L	4	l	2	L	4	l	2	L	4
12	n	3	N	5	n	3	N	5	n	3	N	5

Figure 6 Date Code Marking TSNP-6-10

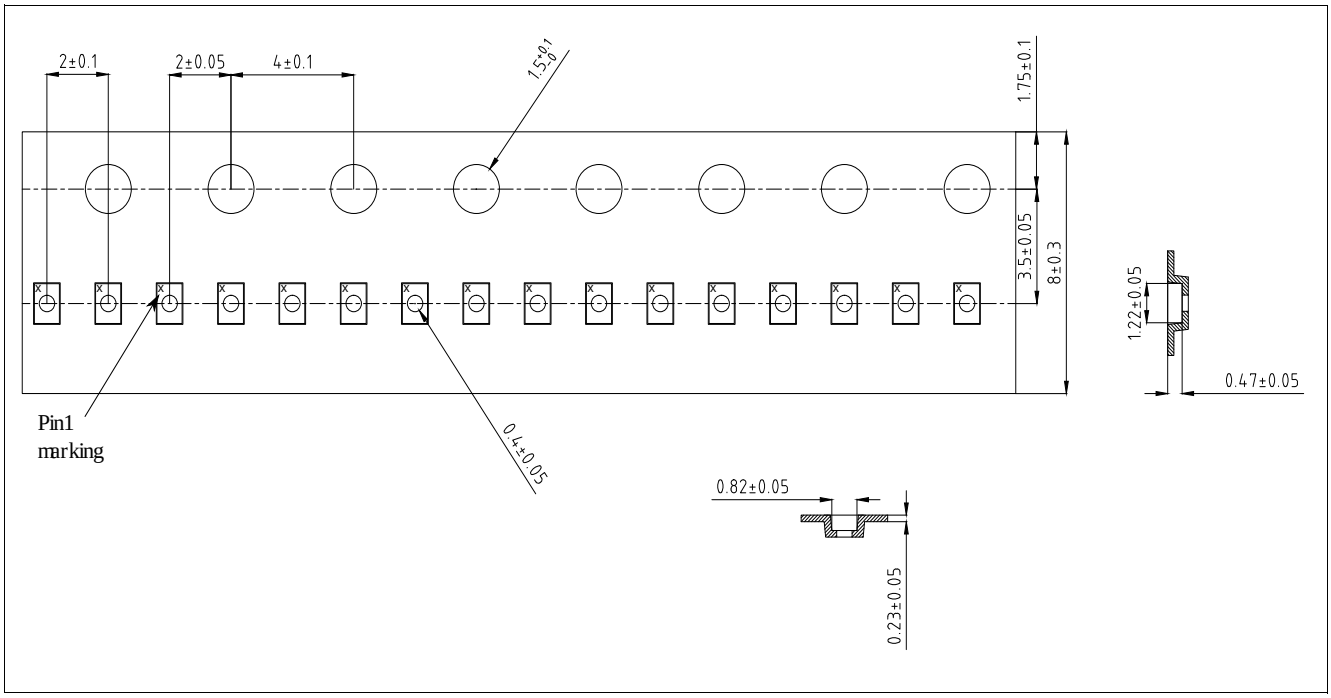

Figure 7 Tape & Reel Dimensions TSNP-6-10 (reel diameter 180 mm, pieces/reel 12000)

Revision History	
Page or Item	**Subjects (major changes since previous revision)**
Revision 2.2, 2024-06-06	
9	Update Bill of Materials

Other Trademarks
All referenced product or service names and trademarks are the property of their respective owners.

Edition 2024-06-06
Published by
Infineon Technologies AG
81726 Munich, Germany

© 2024 Infineon Technologies AG.
All Rights Reserved.

Do you have a question about any aspect of this document?
Email: erratum@infineon.com

IMPORTANT NOTICE

The information given in this document shall in no event be regarded as a guarantee of conditions or characteristics ("Beschaffenheitsgarantie").

With respect to any examples, hints or any typical values stated herein and/or any information regarding the application of the product, Infineon Technologies hereby disclaims any and all warranties and liabilities of any kind, including without limitation warranties of non-infringement of intellectual property rights of any third party.

In addition, any information given in this document is subject to customer's compliance with its obligations stated in this document and any applicable legal requirements, norms and standards concerning customer's products and any use of the product of Infineon Technologies in customer's applications.

The data contained in this document is exclusively intended for technically trained staff. It is the responsibility of customer's technical departments to evaluate the suitability of the product for the intended application and the completeness of the product information given in this document with respect to such application.

For further information on technology, delivery terms and conditions and prices, please contact the nearest Infineon Technologies Office (**www.infineon.com**).

WARNINGS

Due to technical requirements products may contain dangerous substances. For information on the types in question please contact your nearest Infineon Technologies office.

Except as otherwise explicitly approved by Infineon Technologies in a written document signed by authorized representatives of Infineon Technologies, Infineon Technologies' products may not be used in any applications where a failure of the product or any consequences of the use thereof can reasonably be expected to result in personal injury.