Si-MMIC-Amplifier in SIEGET® 25-Technologie

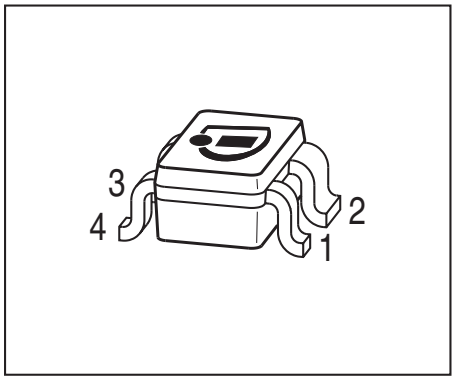

- Cascadable 50 Ω-gain block
- Unconditionally stable
- Gain $|S_{21}|^2$ = 18.5 dB at 1.8 GHz (Appl.1)
  gain $|S_{21}|^2$ = 22 dB at 1.8 GHz (Appl.2)
  IP_{3out} = +7 dBm at 1.8 GHz (V_D=3V, I_D=9.4mA)
- Noise figure *NF* = 2.2 dB at 1.8 GHz
- Typical device voltage V_D = 2 V to 5 V
- Reverse isolation > 35 dB (Appl.2)
- Pb-free (RoHS compliant) package

RoHS

Circuit Diagram

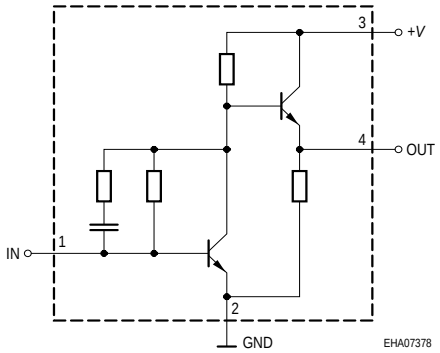

ESD (**E**lectro**s**tatic **d**ischarge) sensitive device, observe handling precaution!

Type	Marking	Pin Configuration				Package
BGA427	BMs	1, IN	2, GND	3, +V	4, Out	SOT343

Maximum Ratings

Parameter	Symbol	Value	Unit
Device current	I_D	25	mA
Device voltage	V_D,+V	6	V
Total power dissipation T_S = 120 °C	P_{tot}	150	mW
RF input power	P_{RFin}	-10	dBm
Junction temperature	T_j	150	°C
Ambient temperature range	T_A	-65 ... 150	
Storage temperature range	T_{stg}	-65 ... 150	

Thermal Resistance

Junction - soldering point[1)]	R_{thJS}	≤ 295	K/W

[1]For calculation of R_{thJA} please refer to Application Note Thermal Resistance

Electrical Characteristics at T_A = 25 °C, unless otherwise specified.

Parameter	Symbol	Values			Unit
		min.	typ.	max.	
AC characteristics V_D = 3 V, Z_o = 50Ω, Testfixture Appl.1					
Insertion power gain	$\|S_{21}\|^2$				dB
f = 0.1 GHz		-	27	-	
f = 1 GHz		-	22	-	
f = 1.8 GHz		-	18.5	-	
Reverse isolation	S12	-	22	-	
f = 1.8 GHz					
Noise figure	NF				
f = 0.1 GHz		-	1.9	-	
f = 1 GHz		-	2	-	
f = 1.8 GHz		-	2.2	-	
Intercept point at the output	IP_{3out}	-	+ 7	-	dBm
f = 1.8 GHz					
Return loss input	RL_{in}	-	>12	-	dB
f = 1.8 GHz					
Return loss output	RL_{out}	-	>9	-	
f = 1.8 GHz					

Typical configuration

Appl.1

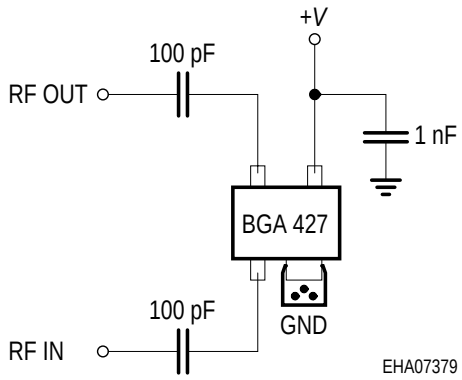

Appl.2

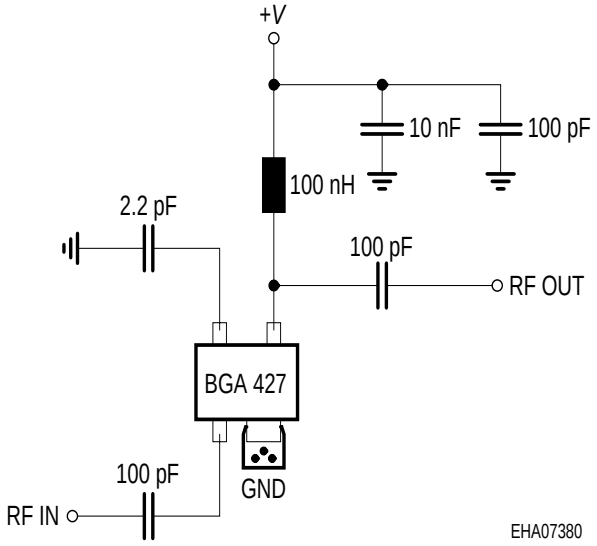

Note: 1) Large-value capacitors should be connected from pin 3 to ground right at the device to provide a low impedance path (appl.1).

2) The use of plated through holes right at pin 2 is essential for pc-board-applications. Thin boards are recommended to minimize the parasitic inductance to ground.

S-Parameters at T_A = 25 °C, (Testfixture, Appl.1)

f	S_{11}		S_{21}		S_{12}		S_{22}	
GHz	MAG	ANG	MAG	ANG	MAG	ANG	MAG	ANG
V_D = 3V, Z_o = 50Ω								
0.1	0.1382	-38.3	24.821	164.9	0.0022	50.7	0.6435	174.8
0.2	0.1179	-16	24.606	158.9	0.0046	71.8	0.6278	166.9
0.5	0.1697	-20.8	22.236	135.2	0.0104	83.8	0.54	147.3
0.8	0.1824	-56.9	18.258	115.4	0.0169	94.8	0.4453	140.2
0.9	0.1782	-69.1	17.152	109.4	0.0194	97.3	0.4326	139.4
1	0.176	-80.6	15.786	104	0.0225	98.3	0.4129	138.1
1.5	0.1827	-133.5	10.923	84.9	0.0385	99.7	0.3852	139.6
1.8	0.1969	-156.1	9.029	77	0.0479	99.3	0.3917	139.3
1.9	0.2021	-162.8	8.486	74.7	0.0517	98.9	0.3946	138.8
2	0.2116	-167.7	8.015	72.3	0.0549	98.8	0.3991	138.3
2.5	0.2437	172.8	6.259	63	0.0709	97.1	0.4202	134.6
3	0.258	153.3	5.103	55	0.0892	96.9	0.4477	131

Spice-model BGA 427

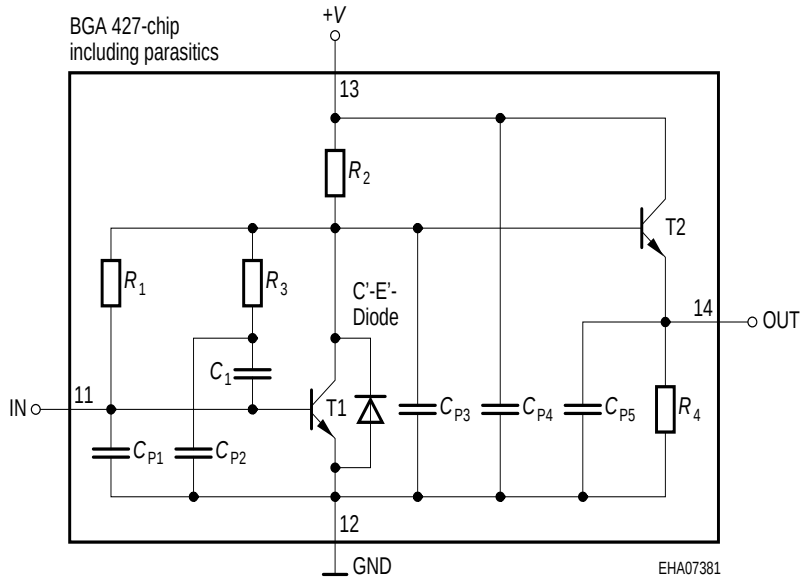

T1	T501
T2	T501
R_1	14.5kΩ
R_2	280Ω
R_3	2.4kΩ
R_4	170Ω
C_1	2.3pF
C_{P1}	0.2pF
C_{P2}	0.2pF
C_{P3}	0.6pF
C_{P4}	0.1pF
C_{P5}	0.1pF
C'-E'-diode	T1

Transistor Chip Data T1 (Berkley-SPICE 2G.6 Syntax) :

IS =	0.21024	fA	BF =	83.23	-	NF =	1.0405	-
VAF =	39.251	V	IKF =	0.16493	A	ISE =	15.761	fA
NE =	1.7763	-	BR =	10.526	-	NR =	0.96647	-
VAR =	34.368	V	IKR =	0.25052	A	ISC =	0.037223	fA
NC =	1.3152	-	RB =	15	Ω	IRB =	0.21215	A
RBM =	1.3491	Ω	RE =	1.9289		RC =	0.12691	Ω
CJE =	3.7265	fF	VJE =	0.70367	V	MJE =	0.37747	-
TF =	4.5899	ps	XTF =	0.3641	-	VTF =	0.19762	V
ITF =	1.3364	mA	PTF =	0	deg	CJC =	96.941	fF
VJC =	0.99532	V	MJC =	0.48652	-	XCJC =	0.08161	-
TR =	1.4935	ns	CJS =	0	fF	VJS =	0.75	V
MJS =	0	-	XTB =	0	-	EG =	1.11	eV
XTI =	3	-	FC =	0.99469	-	TNOM	300	K

C'-E'-Diode Data (Berkley-SPICE 2G.6 Syntax) :

IS =	2	fA	N =	1.02	-	RS =	20	Ω

All parameters are ready to use, no scaling is necessary

Package Equivalent Circuit:

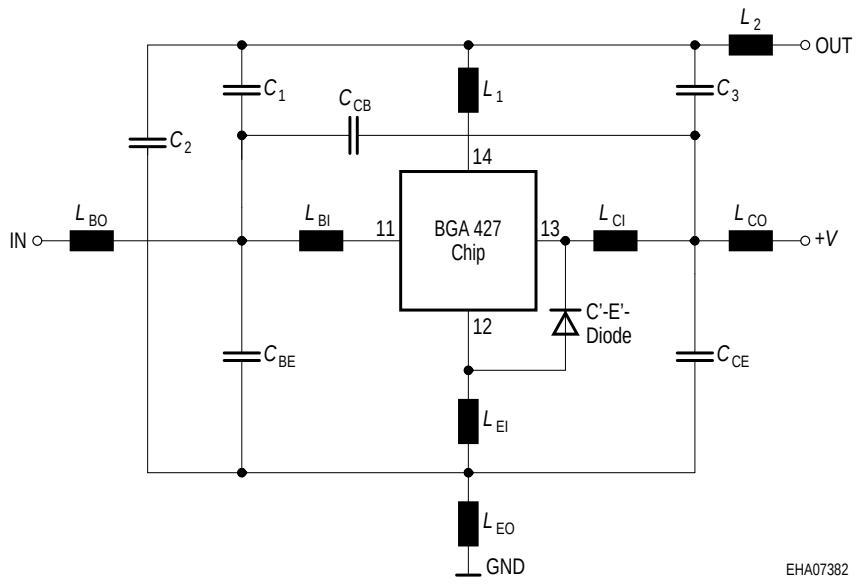

L_{BI} =	0.36	nH
L_{BO} =	0.4	nH
L_{EI} =	0.3	nH
L_{EO} =	0.15	nH
L_{CI} =	0.36	nH
L_{CO} =	0.4	nH
C_{BE} =	95	fF
C_{CB} =	6	fF
C_{CE} =	132	fF
C_1 =	28	fF
C_2 =	88	fF
C_3 =	8	fF
L_1 =	0.6	nH
L_2 =	0.4	nH

Valid up to 3GHz

Extracted on behalf of Infineon Technologies AG by:
Institut für Mobil-und Satellitentechnik (IMST)

For examples and ready to use parameters please contact your local Infineon Technologies distributor or sales office to obtain a Infineon Technologies CD-ROM or see Internet:
http://www.infineon.com/silicondiscretes

Insertion power gain $|S_{21}|^2 = f(f)$

V_D, I_D = parameter

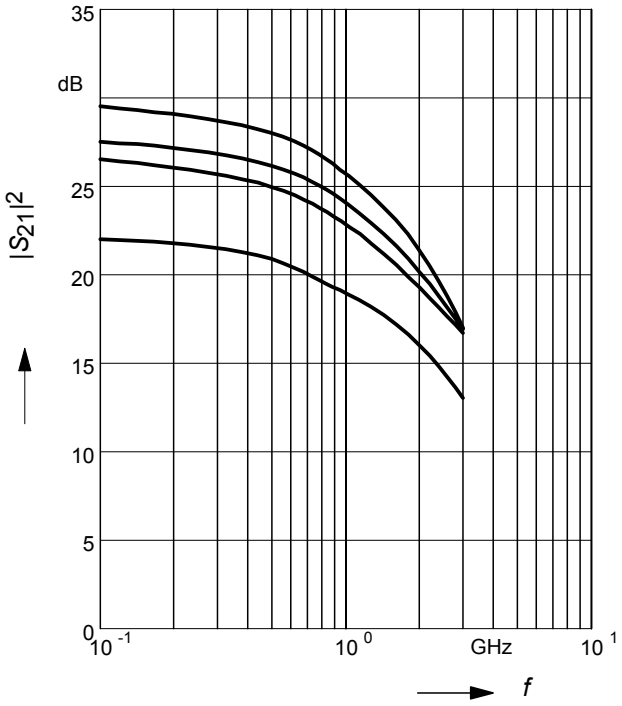

Noise figure $NF = f(f)$

V_D,I_D = parameter

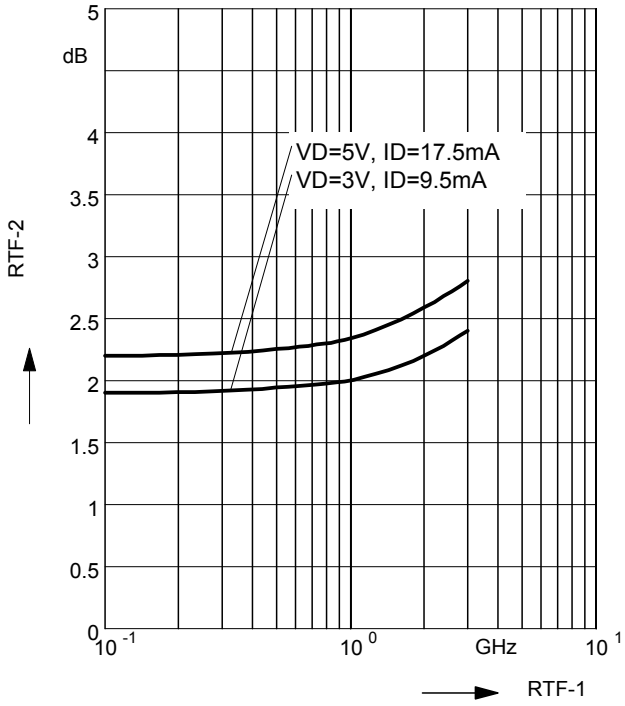

Intercept point at the output

$IP_{3out} = f(f)$

V_D,I_D = parameter

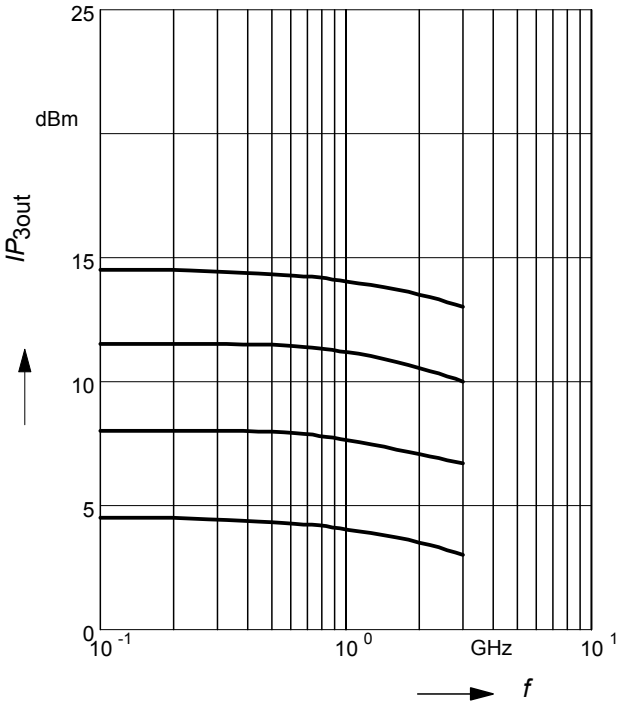

Package Outline



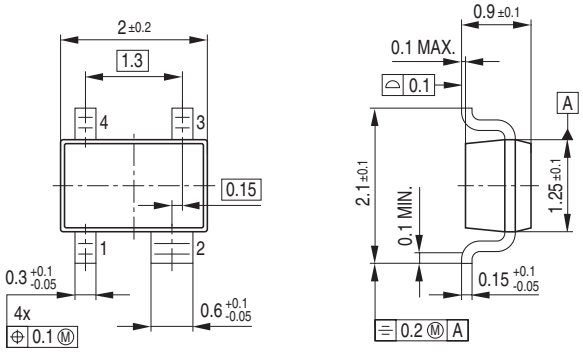

Foot Print

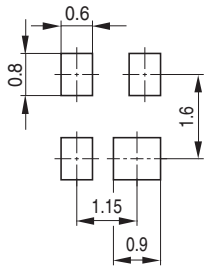

Marking Layout (Example)

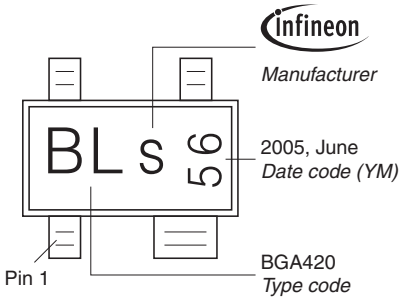

Standard Packing

Reel ø180 mm = 3.000 Pieces/Reel
Reel ø330 mm = 10.000 Pieces/Reel

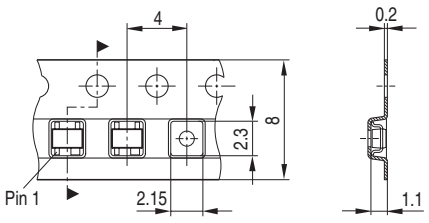

Edition 2009-11-16

Published by
Infineon Technologies AG
81726 Munich, Germany

© 2009 Infineon Technologies AG
All Rights Reserved.

Legal Disclaimer

The information given in this document shall in no event be regarded as a guarantee of conditions or characteristics. With respect to any examples or hints given herein, any typical values stated herein and/or any information regarding the application of the device, Infineon Technologies hereby disclaims any and all warranties and liabilities of any kind, including without limitation, warranties of non-infringement of intellectual property rights of any third party.

Information

For further information on technology, delivery terms and conditions and prices, please contact the nearest Infineon Technologies Office (<www.infineon.com>).

Warnings

Due to technical requirements, components may contain dangerous substances. For information on the types in question, please contact the nearest Infineon Technologies Office.
Infineon Technologies components may be used in life-support devices or systems only with the express written approval of Infineon Technologies, if a failure of such components can reasonably be expected to cause the failure of that life-support device or system or to affect the safety or effectiveness of that device or system. Life support devices or systems are intended to be implanted in the human body or to support and/or maintain and sustain and/or protect human life. If they fail, it is reasonable to assume that the health of the user or other persons may be endangered.