Smart Power High-Side-Switch

RoHS AEC Qualified

Features

- Overload protection
- Current limitation
- Short circuit protection
- Thermal shutdown with restart
- Overvoltage protection (including load dump)
- Fast demagnetization of inductive loads
- Reverse battery protection with external resistor
- CMOS compatible input
- Loss of GND and loss of V_{bb} protection
- ESD - Protection
- Very low standby current
- AEC qualified
- Green product (RoHS complinat)

Product Summary

Overvoltage protection	$V_{bb(AZ)}$	41	V
Operating voltage	$V_{bb(on)}$	5...34	V
On-state resistance	R_{ON}	350	mΩ
Nominal load current	$I_{L(nom)}$	0.8	A

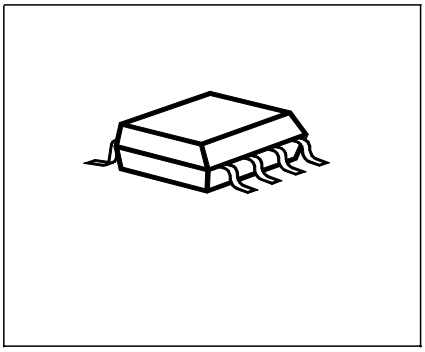

PG-DSO8

Application

- All types of resistive, inductive and capacitive loads
- µC compatible power switch for 12 V and 24 V DC applications
- Replaces electromechanical relays and discrete circuits

General Description

N channel vertical power FET with charge pump, ground referenced CMOS compatible input, monolithically integrated in Smart SIPMOS® technology.
Providing embedded protective functions.

Block Diagram

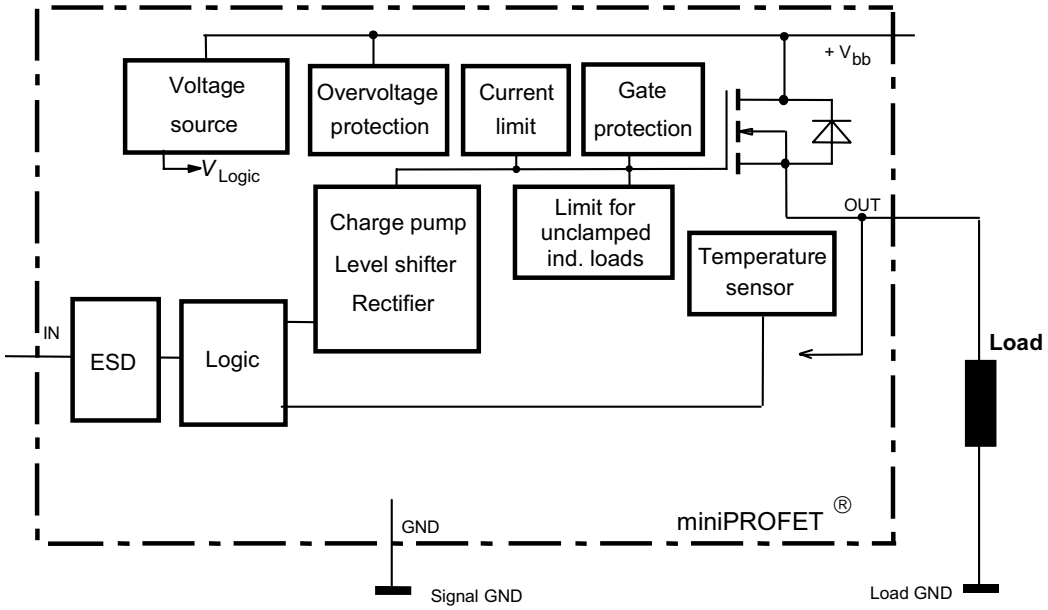

Pin	Symbol	Function
1	GND	Logic ground
2	IN	Input, activates the power switch in case of logic high signal
3	OUT	Output to the load
4	NC	not connected
5	Vbb	Positive power supply voltage
6	Vbb	Positive power supply voltage
7	Vbb	Positive power supply voltage
8	Vbb	Positive power supply voltage

Pin configuration

Top view

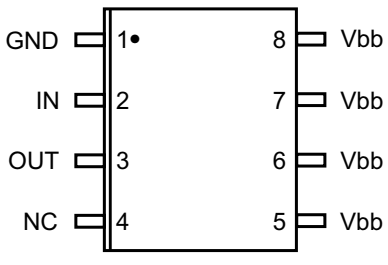

Maximum Ratings at T_j = 25°C, unless otherwise specified

Parameter	Symbol	Value	Unit
Supply voltage	V_{bb}	40	V
Supply voltage for full short circuit protection T_j = -40...+150 °C	$V_{bb(SC)}$	30	
Continuous input voltage	V_{IN}	-10 ... +16	
Load current (Short - circuit current, see page 5)	I_L	self limited	A
Current through input pin (DC)	I_{IN}	± 5	mA
Operating temperature	T_j	-40 ...+150	°C
Storage temperature	T_{stg}	-55 ... +150	
Power dissipation [1)]	P_{tot}	1.5	W
Inductive load switch-off energy dissipation [1)2)] single pulse, (see page 8) Tj =150 °C, V_{bb} = 13.5 V, I_L = 0.5 A	E_{AS}	100	mJ
Load dump protection [2)] $V_{LoadDump}$ [3)]= V_A + V_S R_I=2Ω, t_d=400ms, V_{IN}= low or high, V_A=13,5V R_L = 27 Ω R_L = 45 Ω	$V_{Loaddump}$	 40 60	V
Electro**s**tatic **d**ischarge voltage (Human Body Model) according to ANSI EOS/ESD - S5.1 - 1993 ESD STM5.1 - 1998 Input pin all other pins	V_{ESD}	 ± 1 ± 5	kV

Thermal Characteristics

Thermal resistance @ min. footprint	$R_{th(JA)}$	-	95	-	K/W
Thermal resistance @ 6 cm² cooling area [1)]	$R_{th(JA)}$	-	70	83	

[1] Device on 50mm*50mm*1.5mm epoxy PCB FR4 with 6 cm2 (one layer, 70µm thick) copper area for drain connection. PCB is vertical without blown air. (see page 16)

[2] not subject to production test, specified by design

[3] $V_{Loaddump}$ is setup without the DUT connected to the generator per ISO 7637-1 and DIN 40839 .

Supply voltages higher than $V_{bb(AZ)}$ require an external current limit for the GND pin, e.g. with a 150Ω resistor in GND connection. A resistor for the protection of the input is integrated.

Electrical Characteristics

Parameter and Conditions at T_j = -40...+150°C, V_{bb} = 13,5V, unless otherwise specified	Symbol	Values			Unit
		min.	typ.	max.	
Load Switching Capabilities and Characteristics					
On-state resistance	R_{ON}				mΩ
T_j = 25 °C, I_L = 0.5 A, V_{bb} = 9...40 V		-	260	350	
T_j = 150 °C		-	450	700	
Nominal load current; Device on PCB [1] T_C = 85 °C, $T_j \leq$ 150 °C	$I_{L(nom)}$	0.8	1.1	-	A
Turn-on time to 90% V_{OUT} R_L = 47 Ω	t_{on}	-	-	140	µs
Turn-off time to 10% V_{OUT} R_L = 47 Ω	t_{off}	-	-	170	
Slew rate on 10 to 30% V_{OUT}, R_L = 47 Ω	dV/dt_{on}	-	-	2	V/µs
Slew rate off 70 to 40% V_{OUT}, R_L = 47 Ω	$-dV/dt_{off}$	-	-	2	

Operating Parameters

Operating voltage	$V_{bb(on)}$	5	-	34	V
Undervoltage shutdown of charge pump	$V_{bb(under)}$	-	-	5	
Undervoltage restart of charge pump	$V_{bb(u\ cp)}$	-	-	5.5	
Standby current	$I_{bb(off)}$				µA
T_j = -40...+85 °C, V_{IN} = 0 V		-	-	12	
T_j = 150 °C[2] , V_{IN} = 0 V		-	-	17	
Leakage output current (included in $I_{bb(off)}$) V_{IN} = 0 V	$I_{L(off)}$	-	-	5	
Operating current V_{IN} = 5 V	I_{GND}	-	-	1	mA

[1] Device on 50mm*50mm*1.5mm epoxy PCB FR4 with 6 cm2 (one layer, 70µm thick) copper area for drain connection. PCB is vertical without blown air. (see page 16)

[2] higher current due temperature sensor

Electrical Characteristics

Parameter and Conditions at T_j = -40...+150°C, V_{bb} = 13,5V, unless otherwise specified	Symbol	Values			Unit
		min.	typ.	max.	
Protection Functions[1]					
Initial peak short circuit current limit (pin 5 to 3)	$I_{L(SCp)}$				A
T_j = -40 °C, V_{bb} = 20 V		-	-	8	
T_j = 25 °C		-	4	-	
T_j = 150 °C		2	-	-	
Repetitive short circuit current limit $T_j = T_{jt}$ (see timing diagrams)	$I_{L(SCr)}$	-	3	-	
Output clamp (inductive load switch off) at $V_{OUT} = V_{bb} - V_{ON(CL)}$, I_{bb} = 4 mA	$V_{ON(CL)}$	41	47	-	V
Overvoltage protection [2] I_{bb} = 4 mA	$V_{bb(AZ)}$	41	-	-	
Thermal overload trip temperature	T_{jt}	150	-	-	°C
Thermal hysteresis	ΔT_{jt}	-	10	-	K
Reverse Battery					
Reverse battery[3]	$-V_{bb}$	-	-	32	V
Drain-source diode voltage ($V_{OUT} > V_{bb}$) T_j = 150 °C	$-V_{ON}$	-	600	-	mV

[1] Integrated protection functions are designed to prevent IC destruction under fault conditions described in the data sheet. Fault conditions are considered as "outside" normal operating range. Protection functions are not designed for continuous repetitive operation.

[2] see also $V_{ON(CL)}$ in circuit diagram on page 7

[3] Requires a 150 Ω resistor in GND connection. The reverse load current through the intrinsic drain-source diode has to be limited by the connected load. Power dissipation is higher compared to normal operating conditions due to the voltage drop across the drain-source diode. The temperature protection is not active during reverse current operation! Input current has to be limited (see max. ratings page 3).

Electrical Characteristics

Parameter and Conditions at T_j = -40...+150°C, V_{bb} = 13,5V, unless otherwise specified	Symbol	Values			Unit
		min.	typ.	max.	
Input					
Input turn-on threshold voltage (see page 12)	$V_{IN(T+)}$	-	-	2.2	V
Input turn-off threshold voltage (see page 12)	$V_{IN(T-)}$	0.8	-	-	
Input threshold hysteresis	$\Delta V_{IN(T)}$	-	0.3	-	
Off state input current (see page 12) V_{IN} = 0.7 V	$I_{IN(off)}$	1	-	30	µA
On state input current (see page 12) V_{IN} = 5 V	$I_{IN(on)}$	1	-	30	
Input resistance (see page 6)	R_I	1.5	3.5	5	kΩ

Terms

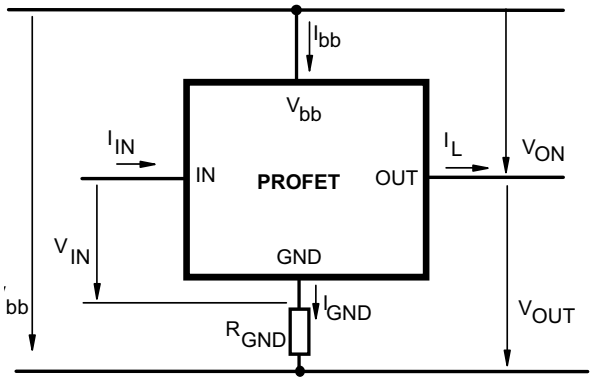

Inductive and overvoltage output clamp

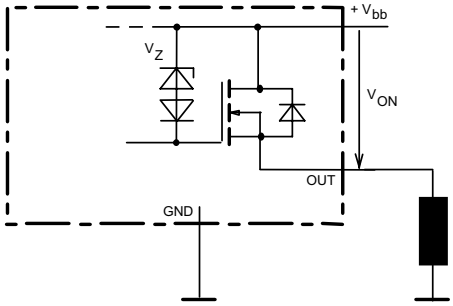

V_{ON} clamped to 47V typ.

Input circuit (ESD protection)

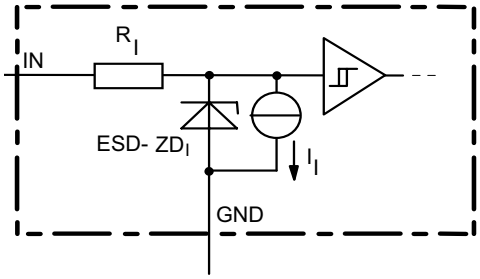

The use of ESD zener diodes as voltage clamp at DC conditions is not recommended

Overvoltage protection of logic part

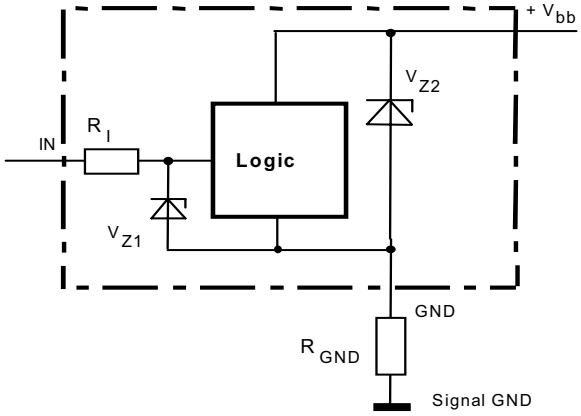

V_{Z1}=6.1V typ., V_{Z2}=$V_{bb(AZ)}$=47V typ.,
R_I=3.5 kΩ typ., R_{GND}=150Ω

Reverse battery protection

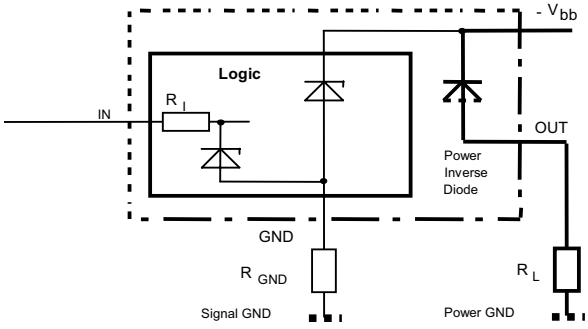

R_{GND}=150Ω, R_I=3.5kΩ typ.,
Temperature protection is not active during inverse current

GND disconnect

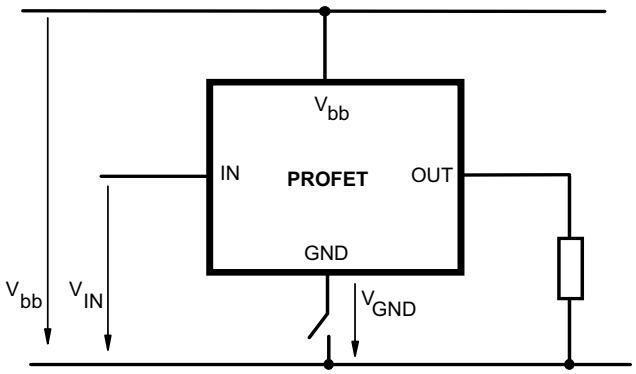

V_{bb} disconnect with charged inductive load

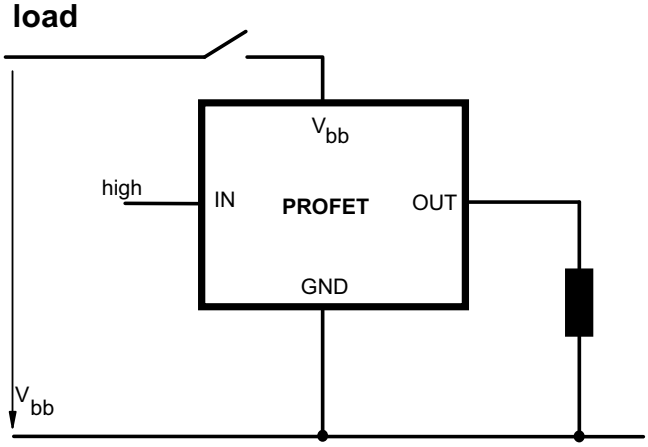

GND disconnect with GND pull up

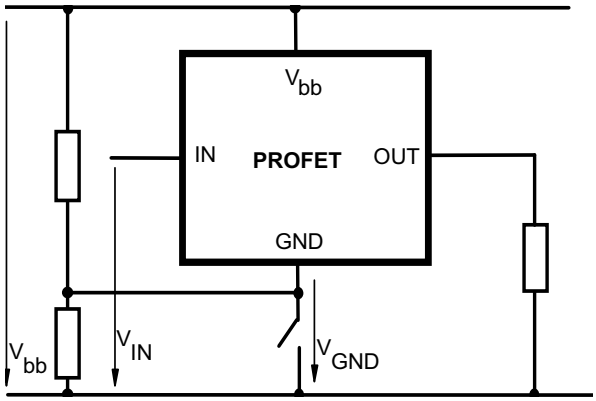

Inductive Load switch-off energy dissipation

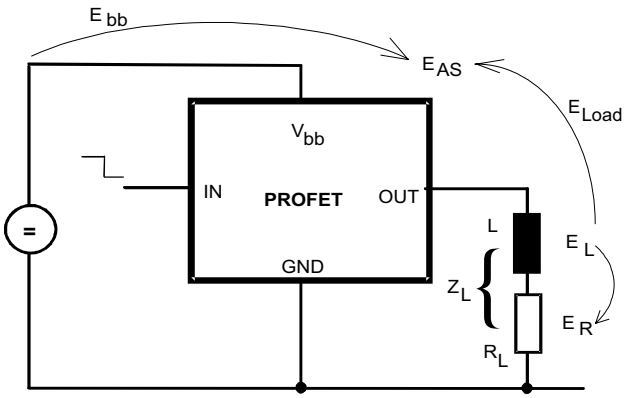

Energy stored in load inductance: $E_L = ½ * L * I_L^2$

While demagnetizing load inductance,
the enérgy dissipated in PROFET is
$E_{AS} = E_{bb} + E_L - E_R = V_{ON(CL)} * i_L(t)\,dt$,
with an approximate solution for $R_L > 0\Omega$:

$$E_{AS} = \frac{I_L * L}{2 * R_L} * (V_{bb} + |V_{OUT(CL)}|) * \ln\left(1 + \frac{I_L * R_L}{|V_{OUT(CL)}|}\right)$$

Typ. transient thermal impedance

Z_{thJA}=f(t_p) @ 6cm² heatsink area

Parameter: $D=t_p/T$

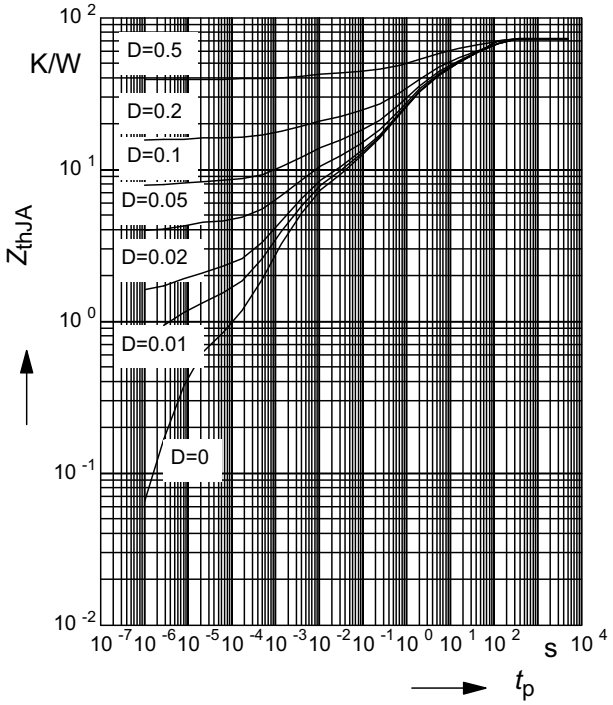

Typ. transient thermal impedance

Z_{thJA}=f(t_p) @ min. footprint

Parameter: $D=t_p/T$

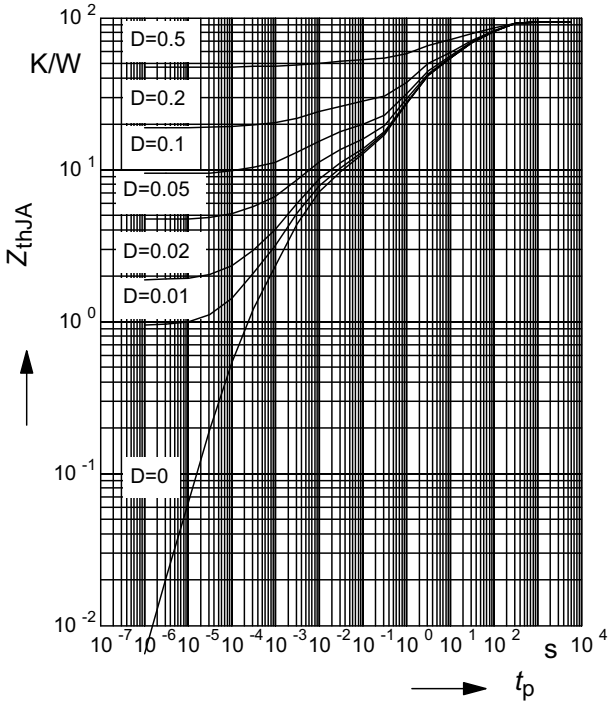

Typ. on-state resistance

R_{ON} = f(T_j) ; V_{bb} = 13,5V ; V_{in} = high

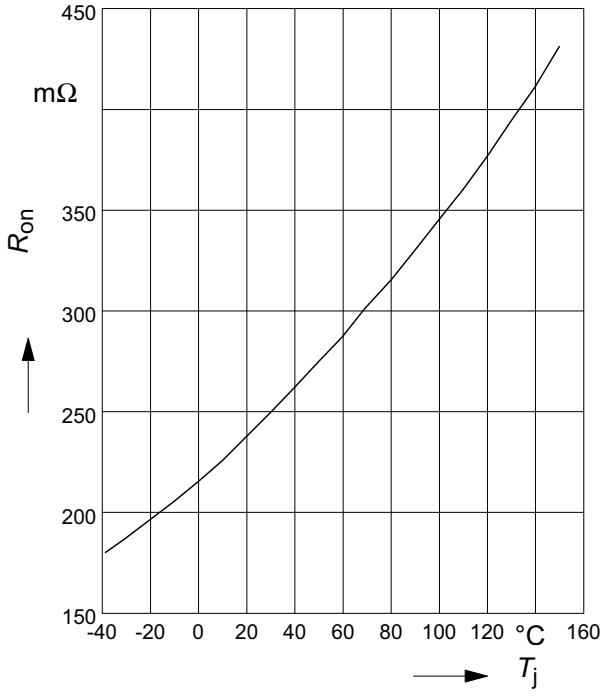

Typ. on-state resistance

R_{ON} = f(V_{bb}); I_L = 0.5A ; V_{in} = high

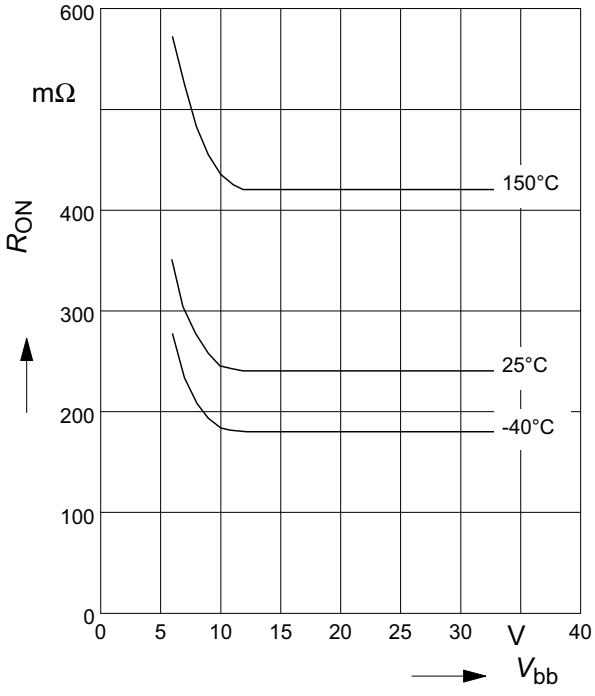

Typ. turn on time

$t_{on} = f(T_j)$; R_L = 47Ω

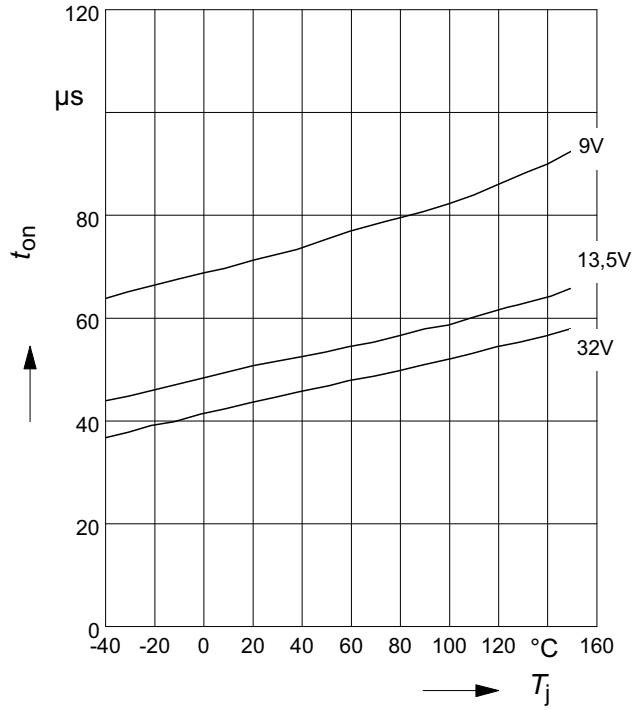

Typ. turn off time

$t_{off} = f(T_j)$; R_L = 47Ω

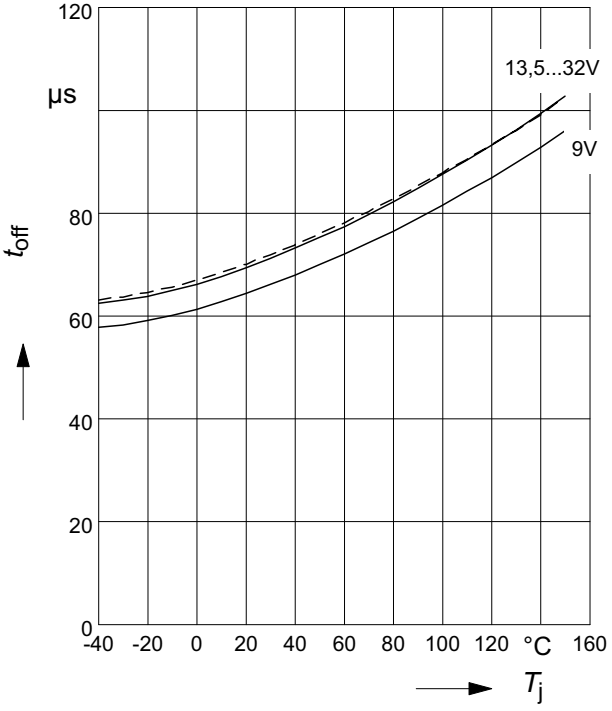

Typ. slew rate on

$dV/dt_{on} = f(T_j)$; R_L = 47 Ω

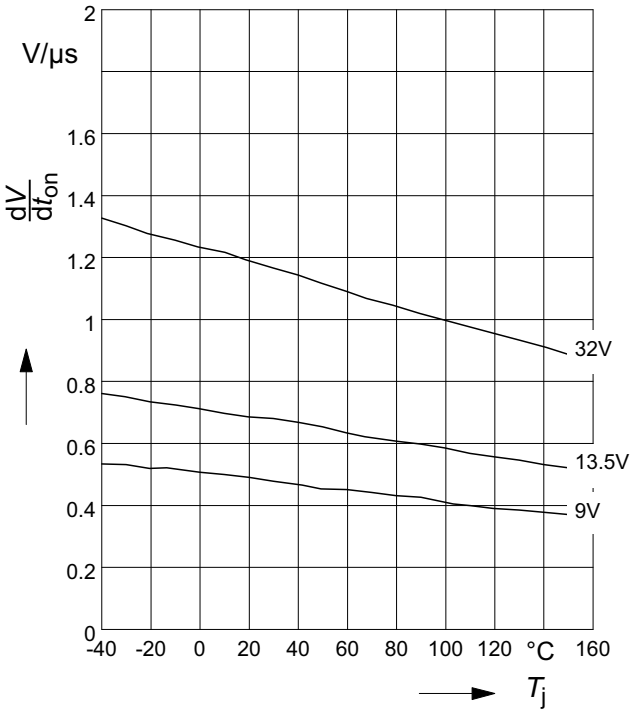

Typ. slew rate off

$dV/dt_{off} = f(T_j)$; R_L = 47 Ω

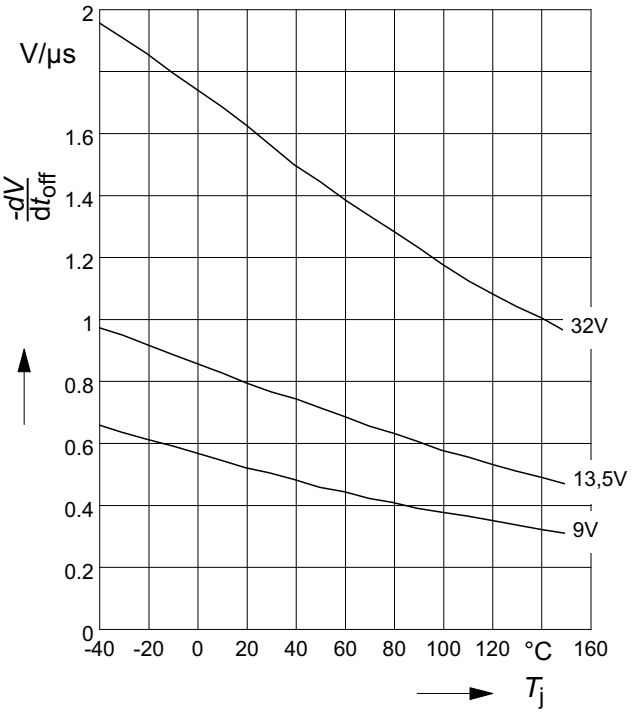

Typ. standby current

$I_{bb(off)} = f(T_j)$; V_{bb} = 32V ; V_{IN} = low

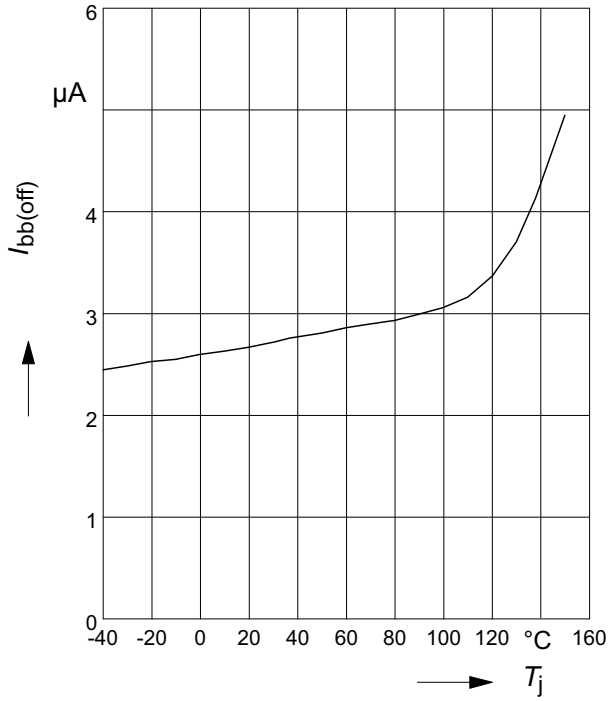

Typ. leakage current

$I_{L(off)} = f(T_j)$; V_{bb} = 32V ; V_{IN} = low

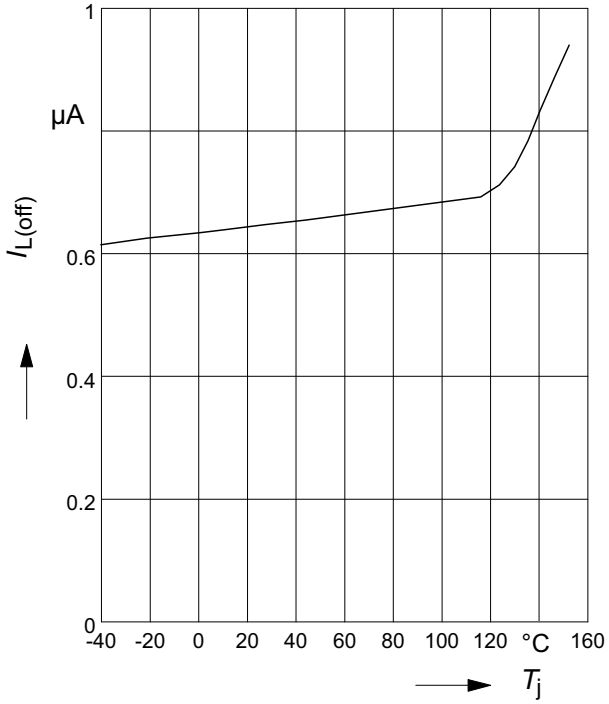

Typ. initial peak short circuit current limit

$I_{L(SCp)} = f(T_j)$; V_{bb} = 20V

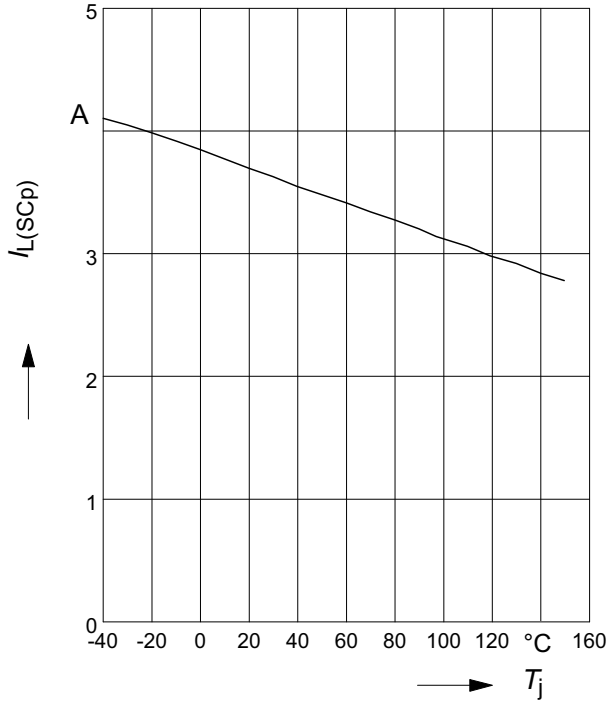

Typ. initial short circuit shutdown time

$t_{off(SC)} = f(T_{j,start})$; V_{bb} = 20V

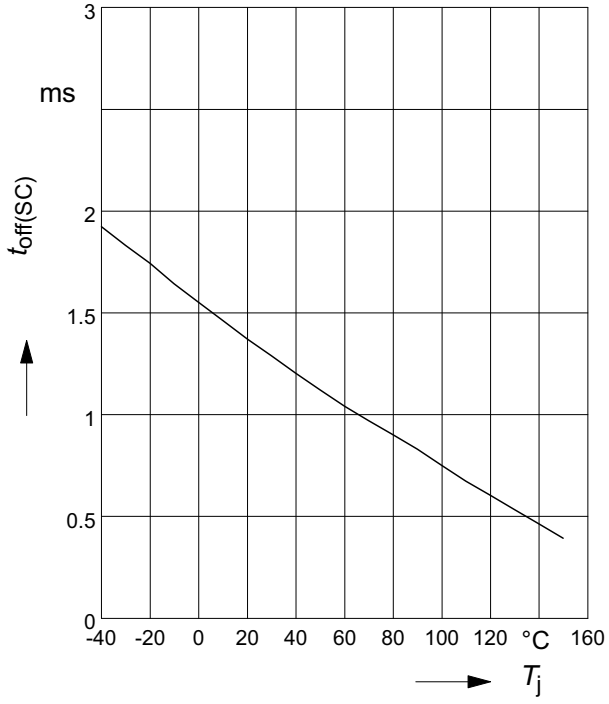

Typ. input current

$I_{IN(on/off)} = f(T_j)$; V_{bb} = 13,5V; V_{IN} = low/high
$V_{INlow} \leq 0{,}7V$; V_{INhigh} = 5V

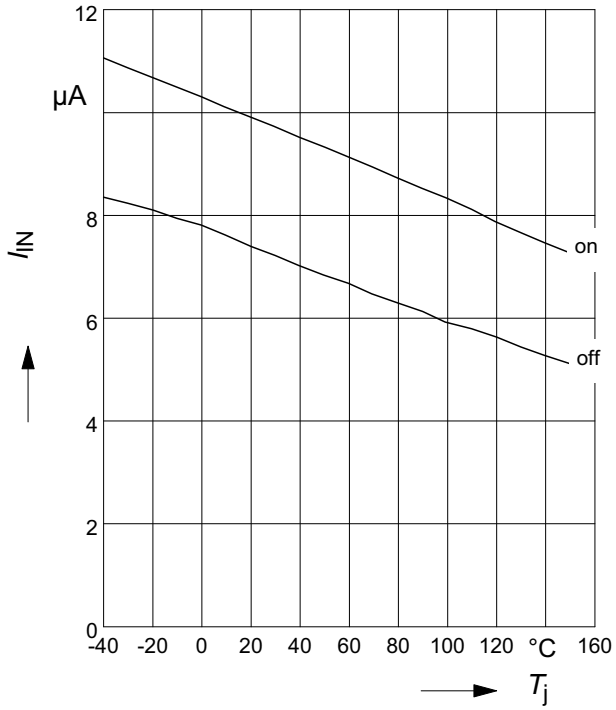

Typ. input current

$I_{IN} = f(V_{IN})$; V_{bb} = 13.5V

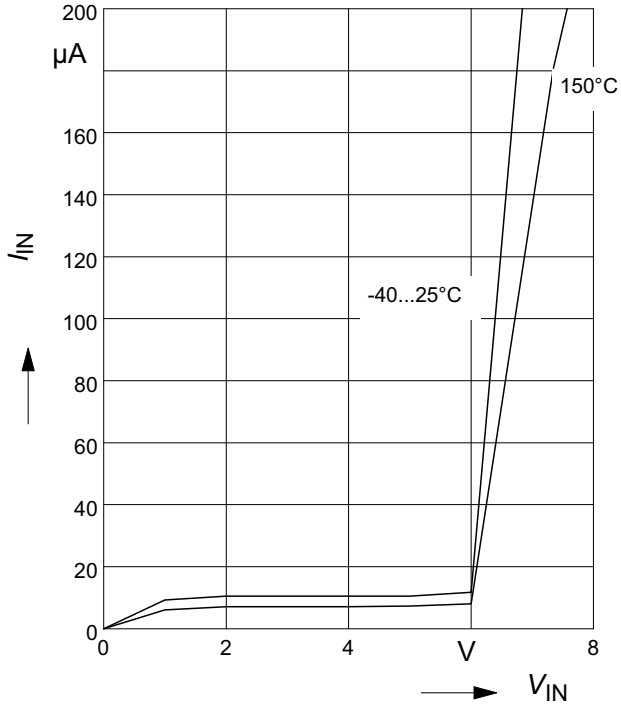

Typ. input threshold voltage

$V_{IN(th)} = f(T_j)$; V_{bb} = 13,5V

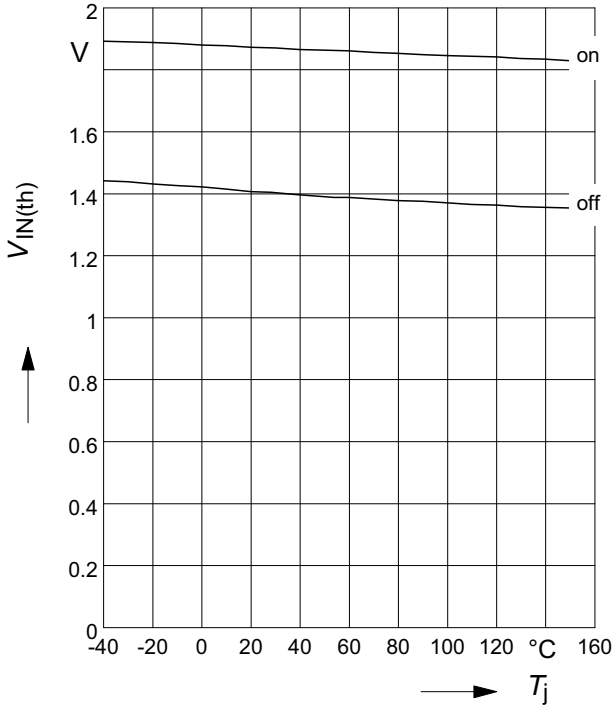

Typ. input threshold voltage

$V_{IN(th)} = f(V_{bb})$; T_j = 25°C

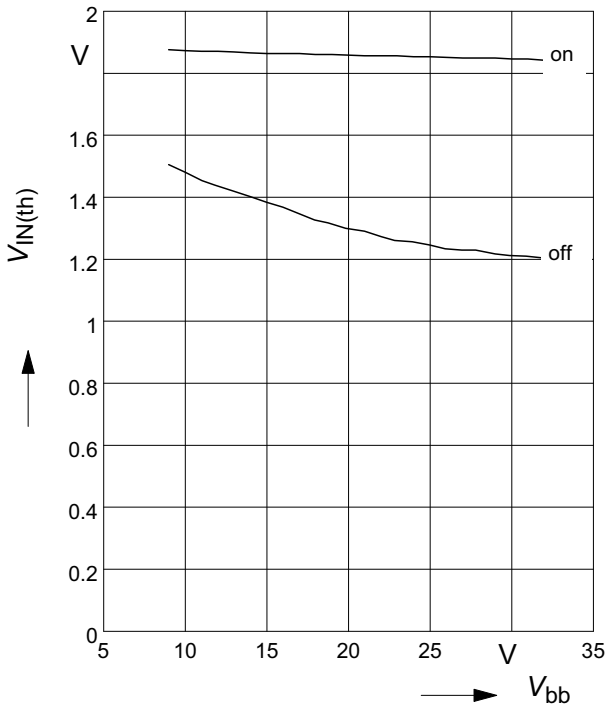

Maximum allowable load inductance for a single switch off

***L* = f(*I*$_L$)**; T_{jstart}=150°C, V_{bb}=13.5V, R_L=0Ω

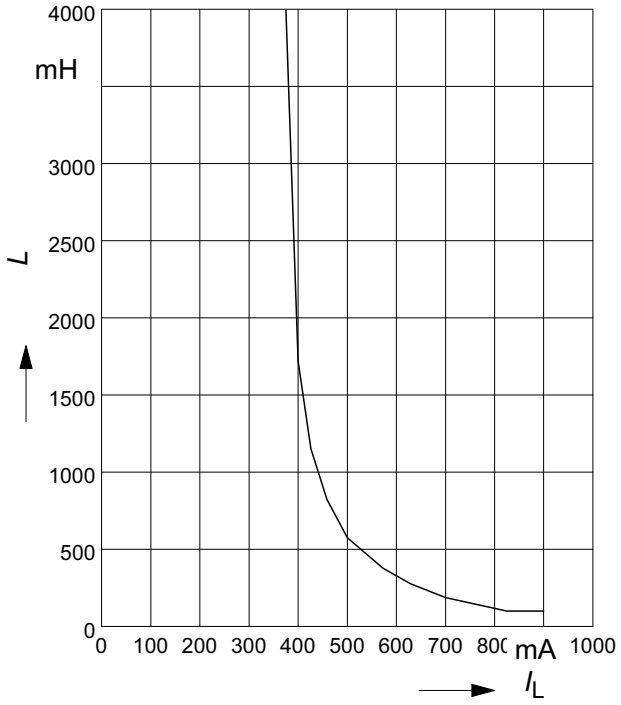

Maximum allowable inductive switch-off energy, single pulse

***E*$_{AS}$ = f(*I*$_L$)**; T_{jstart} = 150°C, V_{bb} = 13,5V

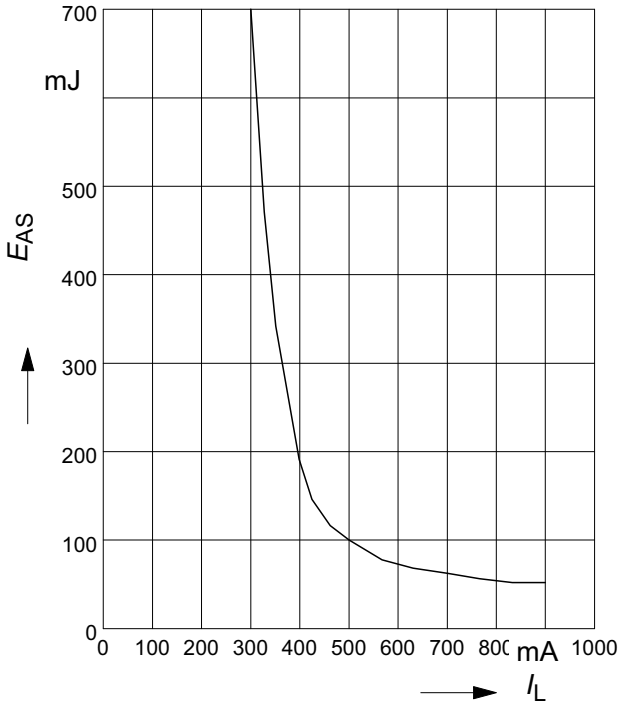

Timing diagrams

Figure 1a: Vbb turn on:

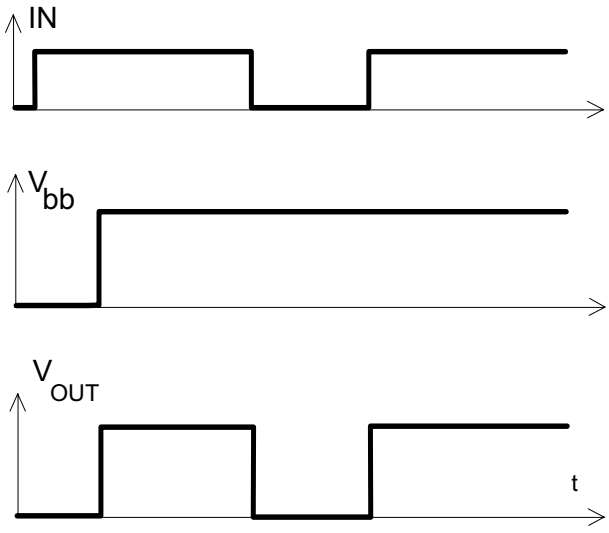

Figure 2a: Switching a resistive load, turn-on/off time and slew rate definition

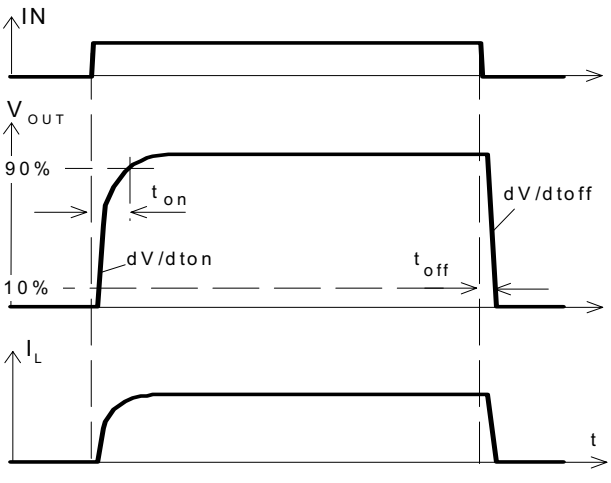

Figure 2b: Switching a lamp,

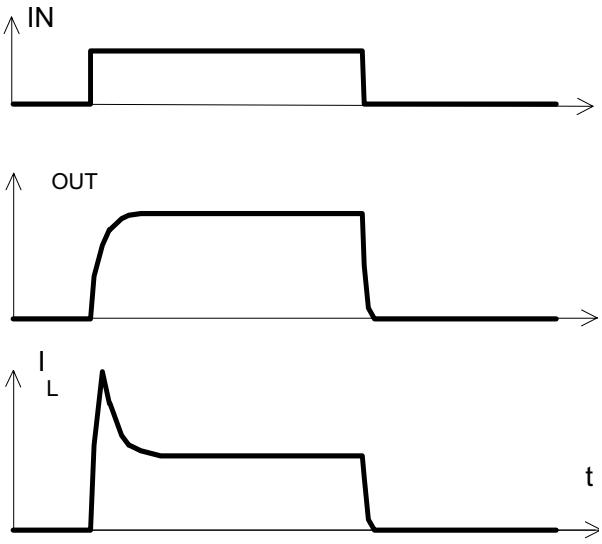

Figure 2c: Switching an inductive load

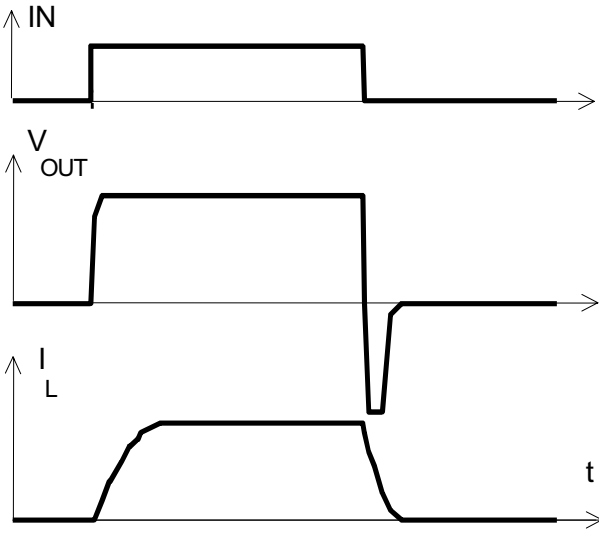

Figure 3a: Turn on into short circuit,
shut down by overtemperature, restart by cooling

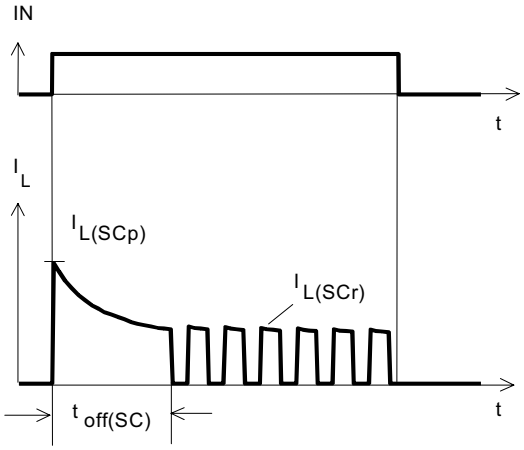

Heating up of the chip may require several milliseconds, depending on external conditions.

Figure 4: Overtemperature:
Reset if $T_j < T_{jt}$

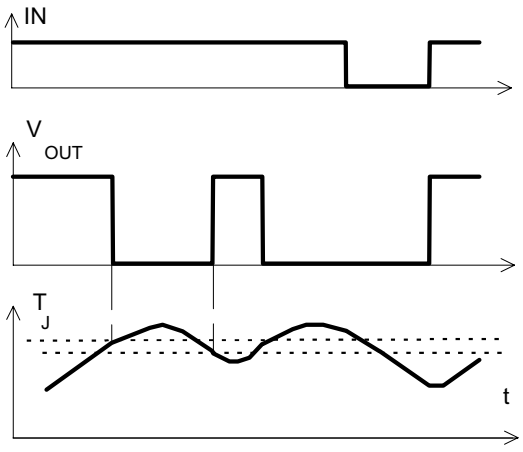

Figure 5: Undervoltage restart of charge pump

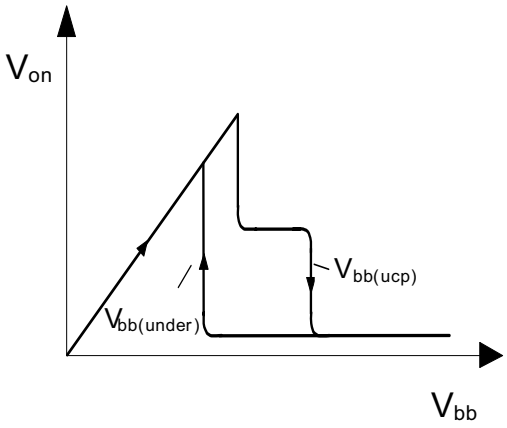

Package Outlines

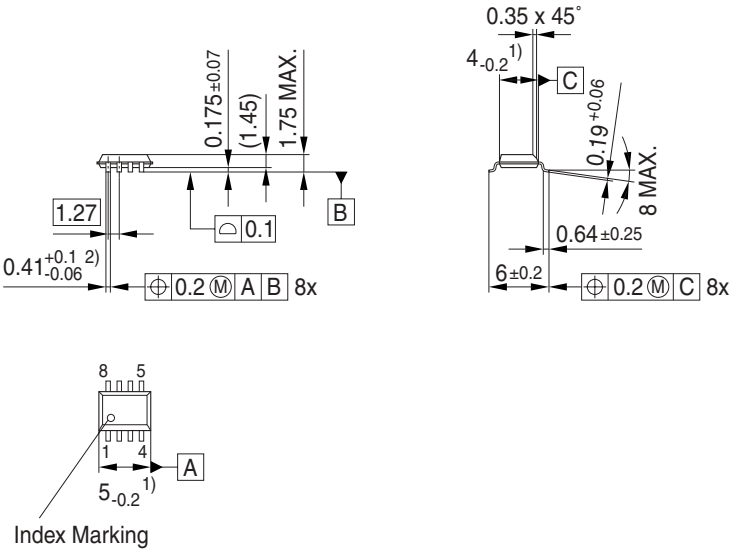

Figure 1 **PG-DSO-8-24** (Plastic Dual Small Outline Package) (RoHS-compliant)

To meet the world-wide customer requirements for environmentally friendly products and to be compliant with government regulations the device is available as a green product. Green products are RoHS-Compliant (i.e Pb-free finish on leads and suitable for Pb-free soldering according to IPC/JEDEC J-STD-020).

Please specify the package needed (e.g. green package) when placing an order

You can find all of our packages, sorts of packing and others in our Infineon Internet Page “Products”: **http://www.infineon.com/products**.

Dimensions in mm

Revision History

Version	Date	Changes
V1.3	2008-02-06	Adding the page 14
V1.2	2007-09-25	Modification of the package drawing
V1.1	2007-05-29	Creation of the green datasheet. First page : Adding the green logo and the AEC qualified Adding the bullet AEC qualified and the RoHS compliant features Package page Modification of the package to be green.

Edition 2008-06-02

Published by
Infineon Technologies AG
81726 Munich, Germany

© Infineon Technologies AG 2/6/08.
All Rights Reserved.

Legal Disclaimer

The information given in this document shall in no event be regarded as a guarantee of conditions or characteristics (“Beschaffenheitsgarantie”). With respect to any examples or hints given herein, any typical values stated herein and/or any information regarding the application of the device, Infineon Technologies hereby disclaims any and all warranties and liabilities of any kind, including without limitation warranties of non-infringement of intellectual property rights of any third party.

Information

For further information on technology, delivery terms and conditions and prices please contact your nearest Infineon Technologies Office (**www.infineon.com**).

Warnings

Due to technical requirements components may contain dangerous substances. For information on the types in question please contact your nearest Infineon Technologies Office.

Infineon Technologies Components may only be used in life-support devices or systems with the express written approval of Infineon Technologies, if a failure of such components can reasonably be expected to cause the failure of that life-support device or system, or to affect the safety or effectiveness of that device or system. Life support devices or systems are intended to be implanted in the human body, or to support and/or maintain and sustain and/or protect human life. If they fail, it is reasonable to assume that the health of the user or other persons may be endangered.