Smart High-Side Power Switch
One Channel: 60mΩ
Status Feedback

RoHS AEC Qualified

Product Summary

On-state Resistance	R_{ON}	60mΩ
Operating Voltage	$V_{bb(on)}$	4.75...41V
Nominal load current	$I_{L(NOM)}$	7.0A
Current limitation	$I_{L(SCr)}$	17A

- AEC qualified
- Green product (RoHS compliant)

Package

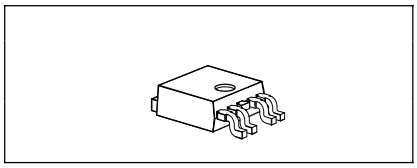

PG-TO-252

General Description

- N channel vertical power MOSFET with charge pump, ground referenced CMOS compatible input and diagnostic feedback, monolithically integrated in Smart SIPMOS® technology.
- Providing embedded protective functions

Applications

- µC compatible high-side power switch with diagnostic feedback for 5V, 12V and 24V grounded loads
- All types of resistive, inductive and capacitve loads
- Most suitable for loads with high inrush currents, so as lamps
- Replaces electromechanical relays, fuses and discrete circuits

Basic Functions

- Very low standby current
- CMOS compatible input
- Improved electromagnetic compatibility (EMC)
- Fast demagnetization of inductive loads
- Stable behaviour at undervoltage
- Wide operating voltage range
- Logic ground independent from load ground

Protection Functions

- Short circuit protection
- Overload protection
- Current limitation
- Thermal shutdown
- Overvoltage protection (including load dump) with external resistor
- Reverse battery protection with external resistor
- Loss of ground and loss of V_{bb} protection
- Electrostatic discharge protection (ESD)

Diagnostic Function

- Diagnostic feedback with open drain output
- Open load detection in ON-state
- Feedback of thermal shutdown in ON-state

Block Diagram

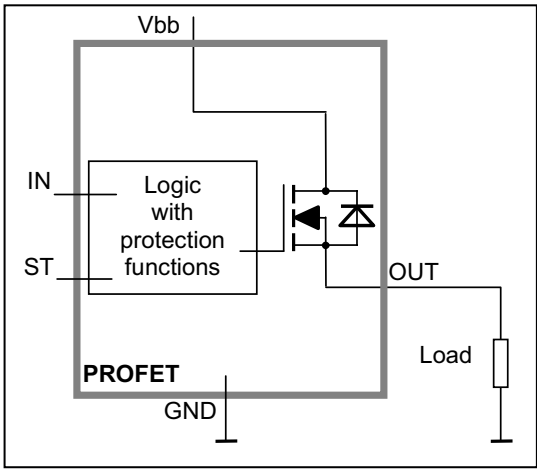

Functional diagram

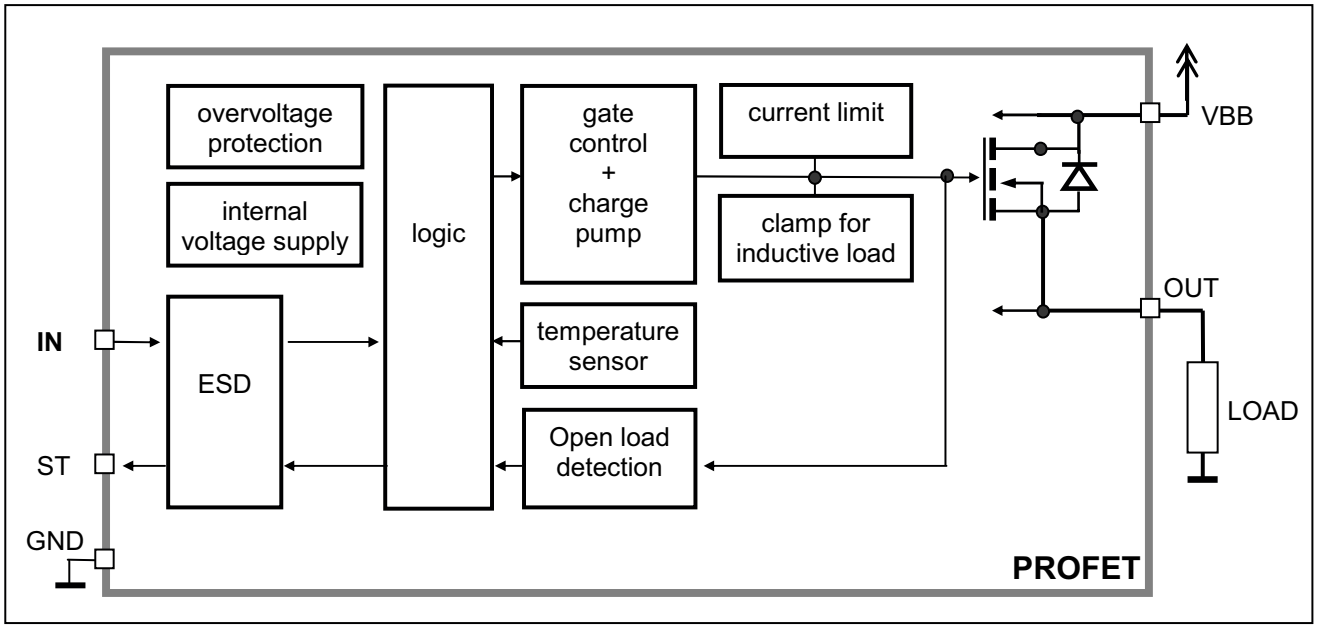

Pin Definitions and Functions

Pin	Symbol	Function
1	GND	**Logic ground**
2	IN	**Input**, activates the power switch in case of logical high signal
3	V_{bb}	**Positive power supply voltage** The tab is shorted to pin 3
4	ST	**Diagnostic feedback**, low on failure
5	OUT	**Output** to the load
Tab	V_{bb}	**Positive power supply voltage** The tab is shorted to pin 3

Pin configuration

(top view)

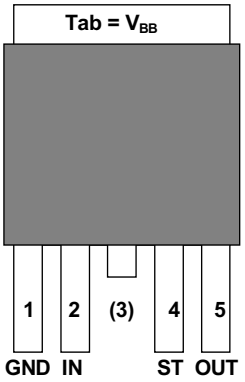

Maximum Ratings at T_j = 25 °C unless otherwise specified

Parameter	Symbol	Values	Unit
Supply voltage (overvoltage protection see page 4)	V_{bb}	43	V
Supply voltage for full short circuit protection $T_{j\,Start}$=-40 ...+150°C	V_{bb}	24	V
Load dump protection[1] $V_{LoadDump}$ = V_A + V_s, V_A = 13.5 V R_I[2]= 2 Ω, R_L= 4.0 Ω, t_d= 200 ms, IN= low or high	$V_{Load\,dump}$[3]	60	V
Load current (Current limit, see page 5)	I_L	self-limited	A
Operating temperature range	T_j	-40 ...+150	°C
Storage temperature range	T_{stg}	-55 ...+150	
Power dissipation (DC), $T_C \le 25$ °C	P_{tot}	75	W
Maximal switchable inductance, single pulse V_{bb} = 12V, $T_{j,start}$ = 150°C, T_C = 150°C const. (See diagram on page 9) $I_{L(ISO)}$ = 7 A, R_L = 0 Ω; $E^{4)}_{AS}$=0.19J:	Z_L	5.6	mH
Electrostatic discharge capability (ESD) IN: (Human Body Model) ST: out to all other pins shorted: acc. MIL-STD883D, method 3015.7 and ESD assn. std. S5.1-1993; R=1.5kΩ; C=100pF	V_{ESD}	1.0 4.0 8.0	kV
Input voltage (DC)	V_{IN}	-10 ... +16	V
Current through input pin (DC)	I_{IN}	±2.0	mA
Current through status pin (DC) see internal circuit diagrams page 8	I_{ST}	±5.0	

Thermal Characteristics

Parameter and Conditions	Symbol	Values			Unit
		min	typ	max	
Thermal resistance chip - case:	R_{thJC}	--	--	1.67	K/W
junction - ambient (free air):	R_{thJA}	--	--	75	
device on pcb[5]:		--	42	--	

1) Supply voltages higher than $V_{bb(AZ)}$ require an external current limit for the GND and status pins (a 150Ω resistor for the GND connection is recommended).
2) R_I = internal resistance of the load dump test pulse generator
3) $V_{Load\,dump}$ is setup without the DUT connected to the generator per ISO 7637-1 and DIN 40839
4) E_{AS} is the maximum inductive switch-off energy
5) Device on 50mm*50mm*1.5mm epoxy PCB FR4 with 6cm² (one layer, 70µm thick) copper area for V_{bb} connection. PCB is vertical without blown air.

Electrical Characteristics

Parameter and Conditions at T_j =-40...+150°C, V_{bb} = 12 V unless otherwise specified	Symbol	Values			Unit
		min	typ	max	
Load Switching Capabilities and Characteristics					
On-state resistance (pin 3 to 5) I_L = 2 A; $V_{BB} \geq$ 7V T_j=25 °C: T_j=150 °C: see diagram, page 10	R_{ON}	--	50 100	60 120	mΩ
Nominal load current, (pin 3 to 5) ISO 10483-1, 6.7: V_{ON}=0.5V, T_C=85°C	$I_{L(ISO)}$	5.8	7.0	--	A
Output current (pin 5) while GND disconnected or GND pulled up[6], V_{bb}=30 V, V_{IN}= 0, see diagram page 8	$I_{L(GNDhigh)}$	--	--	2	mA
Turn-on time IN ⌐‾ to 90% V_{OUT}: Turn-off time IN ‾⌐ to 10% V_{OUT}: R_L = 12 Ω,	t_{on} t_{off}	30 30	100 100	200 200	µs
Slew rate on 10 to 30% V_{OUT}, R_L = 12 Ω,	dV/dt_{on}	0.1	--	1	V/µs
Slew rate off 70 to 40% V_{OUT}, R_L = 12 Ω,	$-dV/dt_{off}$	0.1	--	1	V/µs
Operating Parameters					
Operating voltage T_j =-40 T_j =+25...+150°C:	$V_{bb(on)}$	4.75	-- --	41 43	V
Overvoltage protection[7] T_j =-40°C: I_{bb}=40 mA T_j =25...+150°C:	$V_{bb(AZ)}$	41 43	-- 47	-- 52	V
Standby current (pin 3) [8] T_j=-40...+25°C: V_{IN}=0; see diagram on page **10** T_j= 150°C:	$I_{bb(off)}$	-- --	5 --	9 25	µA
Off-State output current (included in $I_{bb(off)}$) V_{IN}=0	$I_{L(off)}$	--	1	10	µA
Operating current [9], V_{IN}=5 V	I_{GND}	--	0.8	1.5	mA

[6] not subject to production test, specified by design
[7] Supply voltages higher than $V_{bb(AZ)}$ require an external current limit for the GND and status pins (a 150Ω resistor for the GND connection is recommended. See also $V_{ON(CL)}$ in table of protection functions and circuit diagram page 8.
[8] Measured with load
[9] Add I_{ST}, if I_{ST} > 0, add I_{IN}, if V_{IN}>5.5 V

Parameter and Conditions at T_j =-40...+150°C, V_{bb} = 12 V unless otherwise specified	Symbol	Values			Unit
		min	typ	max	
Protection Functions[10]					
Current limit (pin 3 to 5) (see timing diagrams on page 12) T_j =-40°C: T_j =25°C: T_j =+150°C:	$I_{L(lim)}$	21 17 12	28 22 16	36 31 24	A
Repetitive short circuit shutdown current limit $T_j = T_{jt}$ (see timing diagrams, page 12)	$I_{L(SCr)}$	--	17	--	A
Thermal shutdown time[11] $T_{j,start}$ = 25°C: (see timing diagrams on page 12)	$t_{off(SC)}$	--	7.5	--	ms
Output clamp (inductive load switch off) at $V_{OUT} = V_{bb} - V_{ON(CL)}$ I_L= 40 mA:	$V_{ON(CL)}$	41 43	47	52	V
Thermal overload trip temperature	T_{jt}	150	--	--	°C
Thermal hysteresis	ΔT_{jt}	--	10	--	K
Reverse battery (pin 3 to 1) [12]	$-V_{bb}$	--	--	32	V
Reverse battery voltage drop ($V_{out} > V_{bb}$)[13] I_L = -2 A T_j=150 °C:	$-V_{ON(rev)}$	--	600	--	mV
Diagnostic Characteristics					
Open load detection current (on-condition)	$I_{L(OL)}$	10	--	500	mA

[10] Integrated protection functions are designed to prevent IC destruction under fault conditions described in the data sheet. Fault conditions are considered as "outside" normal operating range. Protection functions are not designed for continuous repetitive operation.

[11] Device on 50mm*50mm*1.5mm epoxy PCB FR4 with 6cm² (one layer, 70µm thick) copper area for V_{bb} connection. PCB is vertical without blown air.

[12] Requires 150 Ω resistor in GND connection. The reverse load current through the intrinsic drain-source diode has to be limited by the connected load. Note that the power dissipation is higher compared to normal operating conditions due to the voltage drop across the intrinsic drain-source diode. The temperature protection is not active during reverse current operation! Input and Status currents have to be limited (see max. ratings page 3 and circuit page 8).

[13] not subject to production test, specified by design

Parameter and Conditions at T_j =-40...+150°C, V_{bb} = 12 V unless otherwise specified	Symbol	Values			Unit
		min	typ	max	
Input and Status Feedback[14)]					
Input resistance see circuit page 8	R_I	2.5	3.5	6	kΩ
Input turn-on threshold voltage	$V_{IN(T+)}$	1.7	--	3.2	V
Input turn-off threshold voltage	$V_{IN(T-)}$	1.5	--	--	V
Input threshold hysteresis	$\Delta V_{IN(T)}$	--	0.5	--	V
Off state input current (pin 2), V_{IN} = 0.4 V	$I_{IN(off)}$	1	--	50	µA
On state input current (pin 2), V_{IN} = 5 V	$I_{IN(on)}$	20	50	90	µA
Delay time for status with open load after switch off (see timing diagrams on page 12)	$t_{d(ST\ OL4)}$	100	520	900	µs
Status output (open drain)					
Zener limit voltage I_{ST} = +1.6 mA:	$V_{ST(high)}$	5.4	6.1	--	V
ST low voltage I_{ST} = +1.6 mA:	$V_{ST(low)}$	--	--	0.4	

[14)] If a ground resistor R_{GND} is used, add the voltage drop across this resistor.

Truth Table

	Input level	Output level	Status BTS 428L2
Normal operation	**L** **H**	**L** **H**	**H** **H**
Open load	**L** **H**	**Z** **H**	**H** **L**
Overtem-perature	**L** **H**	**L** **L**	**H** **L**

L = "Low" Level X = don't care Z = high impedance, potential depends on external circuit
H = "High" Level Status signal after the time delay shown in the diagrams (see fig 5. page 12)

Terms

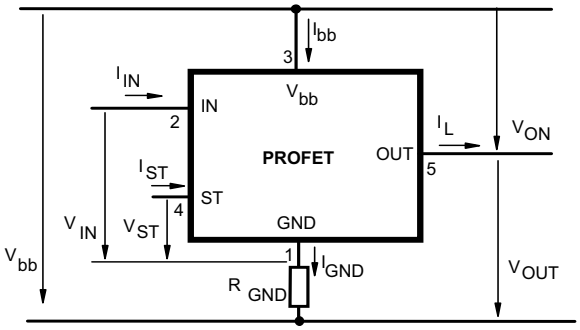

Input circuit (ESD protection)

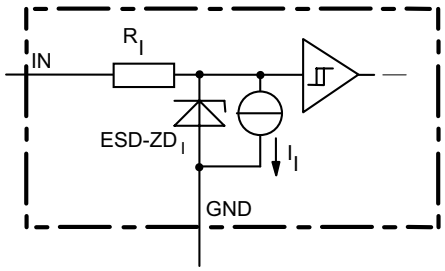

The use of ESD zener diodes as voltage clamp at DC conditions is not recommended

Status output

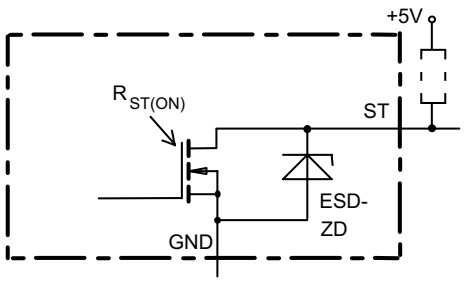

ESD-Zener diode: 6.1 V typ., max 5.0 mA; $R_{ST(ON)}$ < 375 Ω at 1.6 mA. The use of ESD zener diodes as voltage clamp at DC conditions is not recommended.

Inductive and overvoltage output clamp

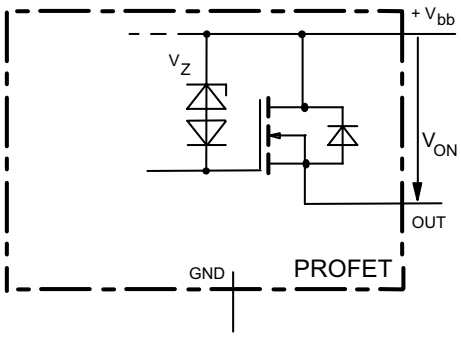

Overvolt. and reverse batt. protection

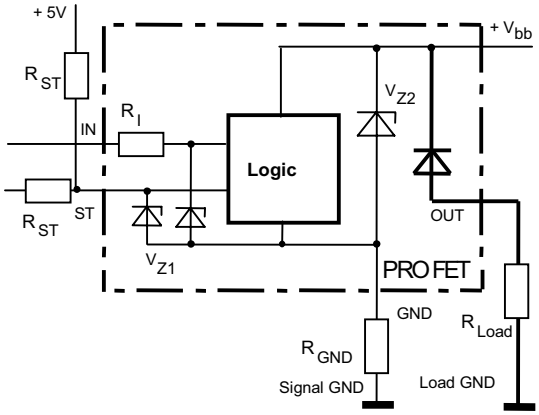

V_{Z1} = 6.1 V typ., V_{Z2} = 47 V typ., R_{GND} = 150 Ω, R_{ST}= 15 kΩ, R_I= 3.5 kΩ typ.
In case of reverse battery the load current has to be limited by the load. Temperature protection is not active

Open-load detection in on-state

Open load, if $V_{ON} < R_{ON} \cdot I_{L(OL)}$; IN high

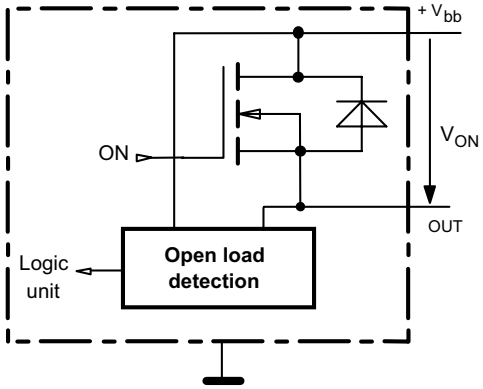

GND disconnect

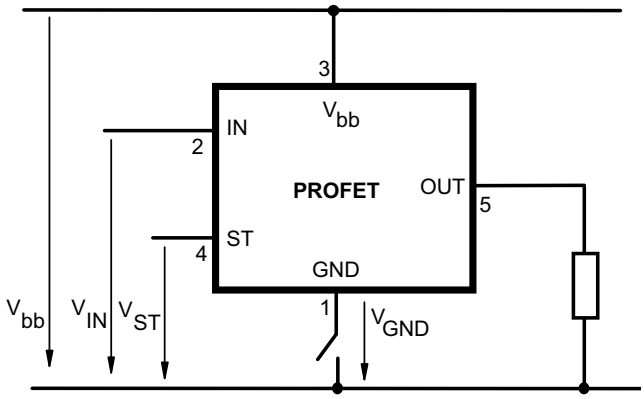

Any kind of load. In case of Input=high is $V_{OUT} \approx V_{IN} - V_{IN(T+)}$.
Due to V_{GND} >0, no V_{ST} = low signal available.

GND disconnect with GND pull up

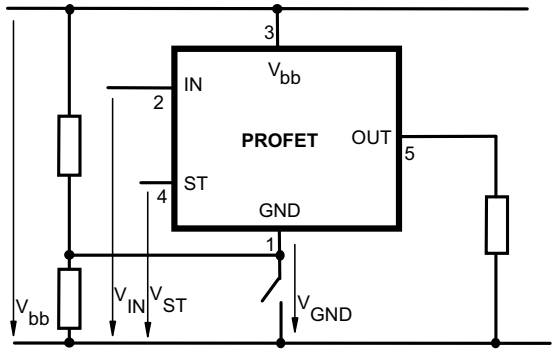

Any kind of load. If $V_{GND} > V_{IN} - V_{IN(T+)}$ device stays off
Due to V_{GND} >0, no V_{ST} = low signal available.

V_{bb} disconnect with energized inductive load

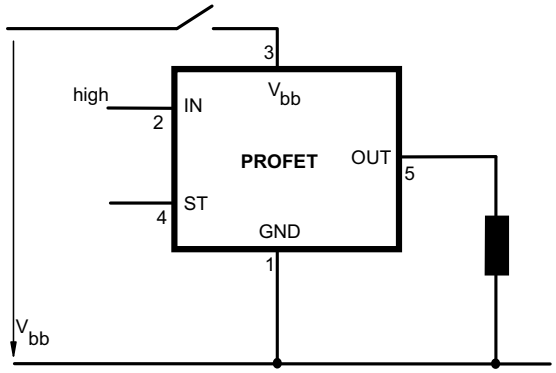

For inductive load currents up to the limits defined by Z_L (max. ratings and diagram on page 9) each switch is protected against loss of V_{bb}.

Consider at your PCB layout that in the case of Vbb disconnection with energized inductive load all the load current flows through the GND connection.

Inductive Load switch-off energy dissipation

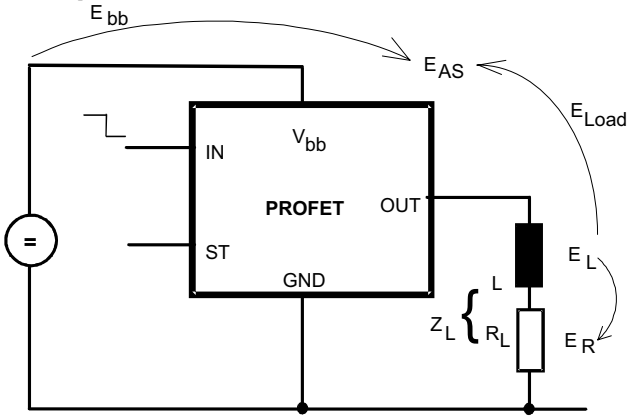

Energy stored in load inductance:

$$E_L = {}^1/_2 \cdot L \cdot I_L^2$$

While demagnetizing load inductance, the energy dissipated in PROFET is

$$E_{AS} = E_{bb} + E_L - E_R = \int V_{ON(CL)} \cdot i_L(t)\, dt,$$

with an approximate solution for $R_L > 0\,\Omega$:

$$E_{AS} = \frac{I_L \cdot L}{2 \cdot R_L} \cdot (V_{bb} + |V_{OUT(CL)}|) \cdot ln\left(1 + \frac{I_L \cdot R_L}{|V_{OUT(CL)}|}\right)$$

Maximum allowable load inductance for a single switch off

$L = f(I_L)$; $T_{j,start}$ = 150°C, T_C = 150°C const., V_{bb} = 12 V, R_L = 0 Ω

Z_L [mH]

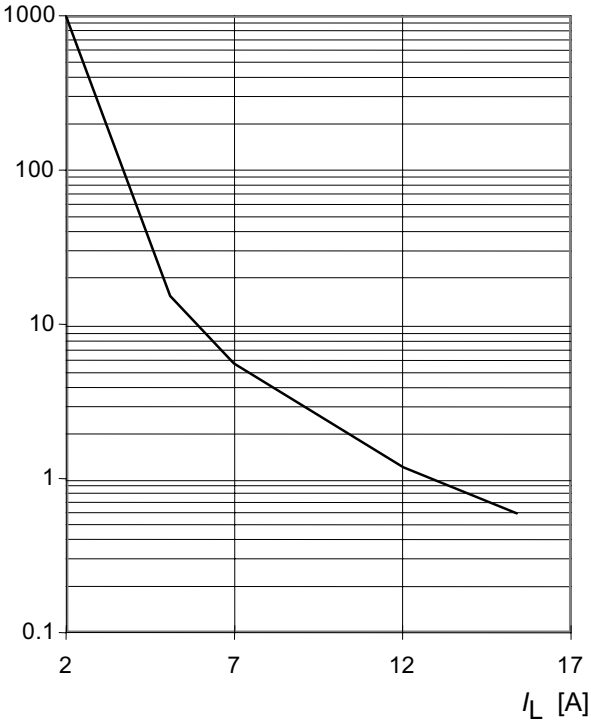

Typ. on-state resistance

$R_{ON} = f(V_{bb}, T_j)$; I_L = 2 A, IN = high

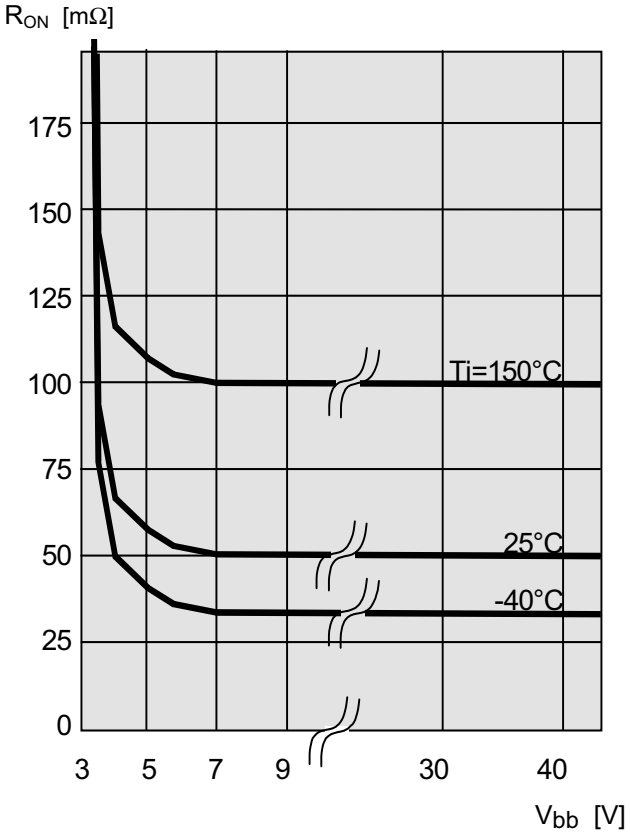

Typ. standby current

$I_{bb(off)} = f(T_j)$; V_{bb} = 9...34 V, IN1,2 = low

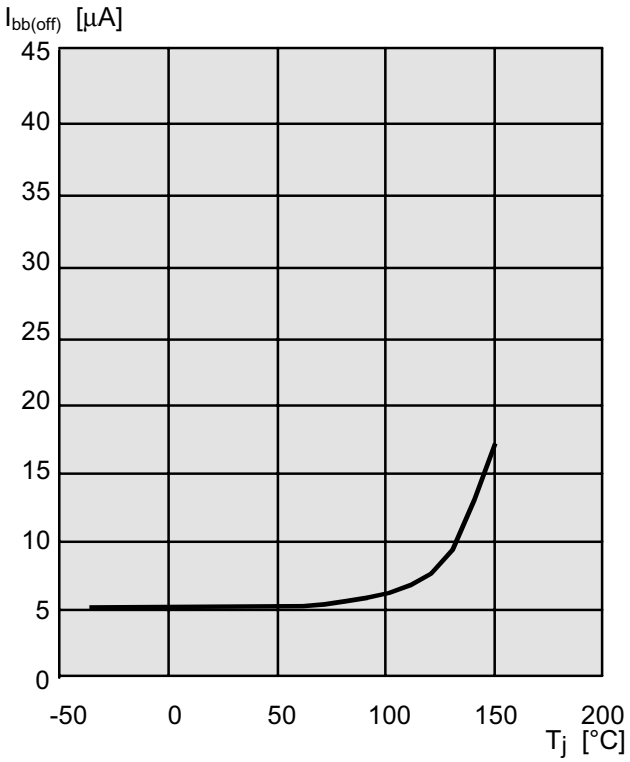

Figure 1a: V_{bb} turn on:

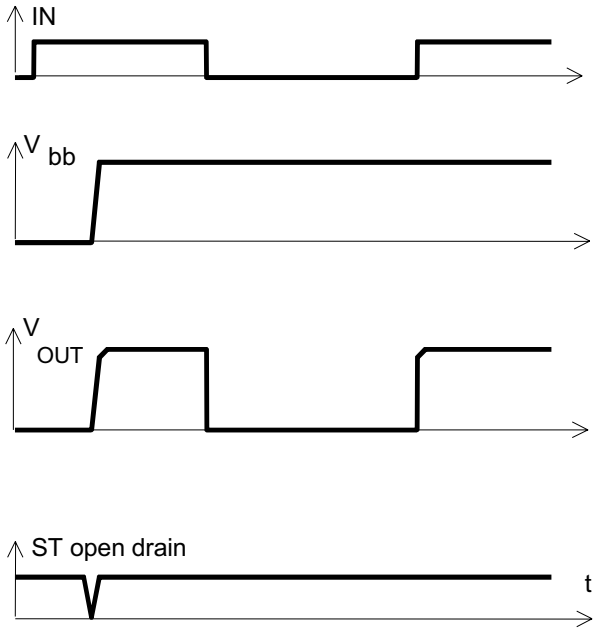

proper turn on under all conditions

Figure 2a: Switching a resistive load, turn-on/off time and slew rate definition:

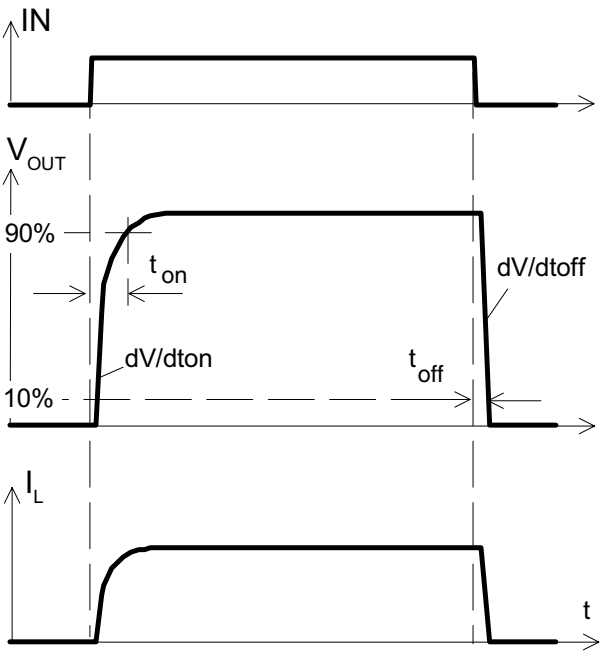

Figure 2b: Switching a lamp,

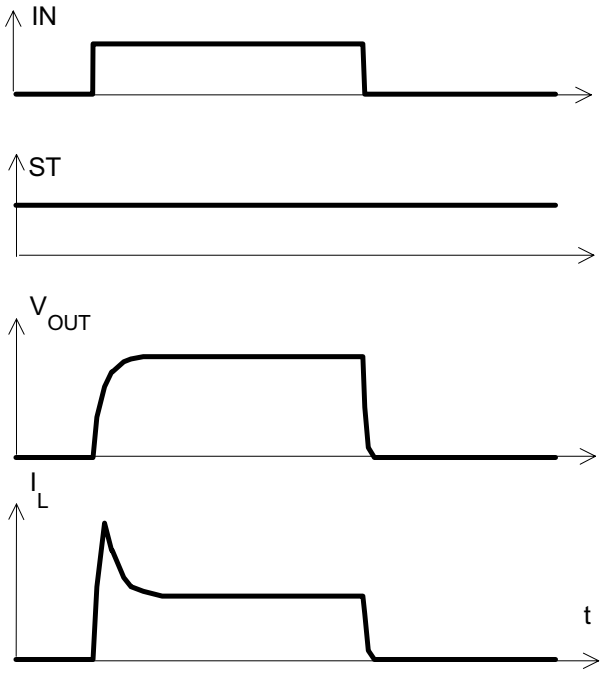

The initial peak current should be limited by the lamp and not by th current limit of the device.

Figure 2c: Switching an inductive load

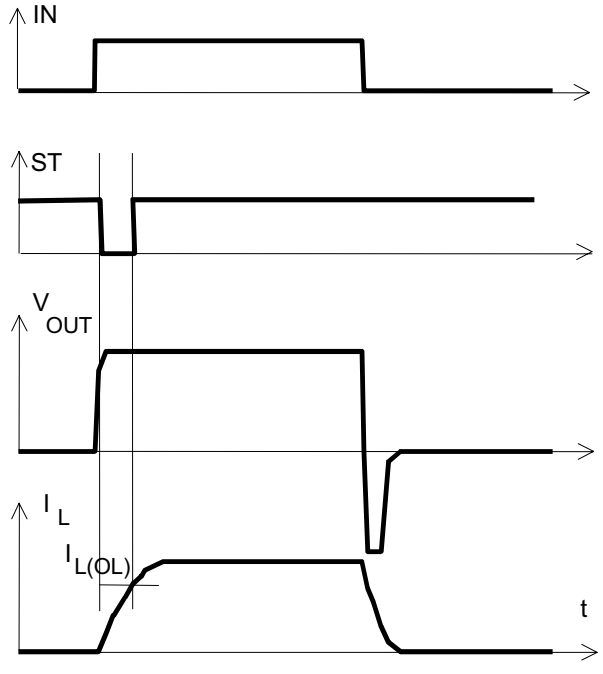

*) if the time constant of load is too large, open-load-status may occur

Figure 3a: Short circuit
shut down by overtemperature, reset by cooling

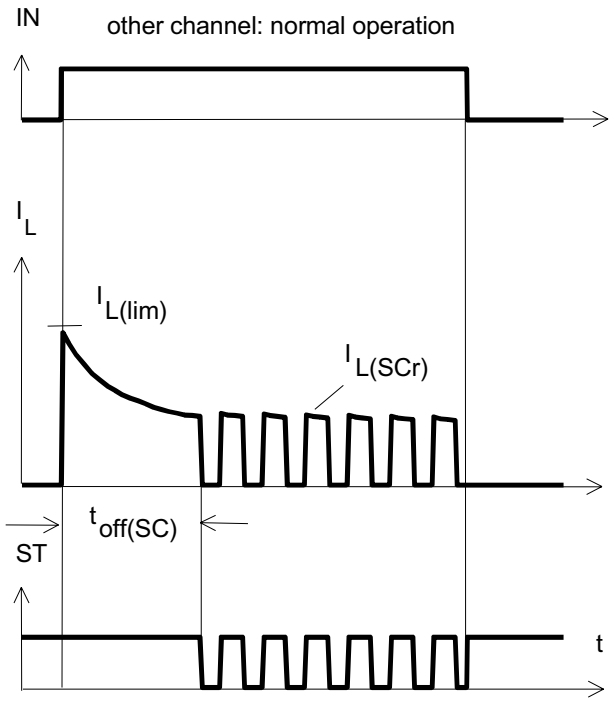

Heating up of the chip may require several milliseconds, depending on external conditions

Figure 4a: Overtemperature:
Reset if $T_j < T_{jt}$

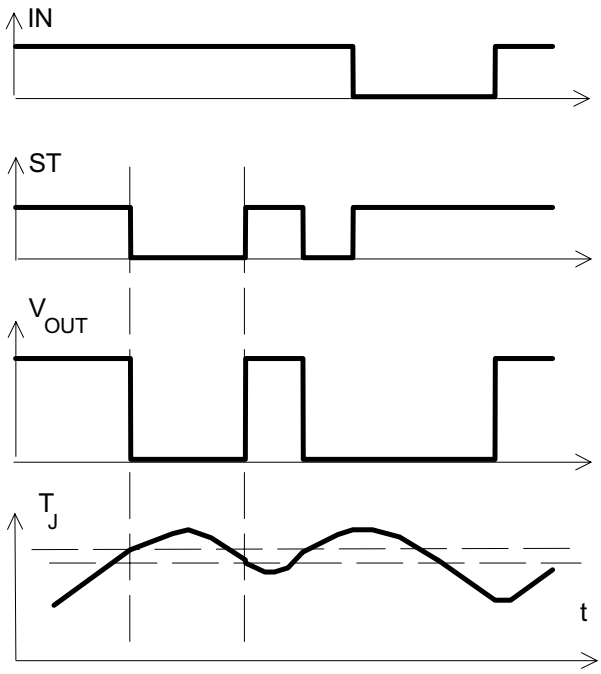

Figure 5a: Open load: detection in ON-state, open load occurs in on-state

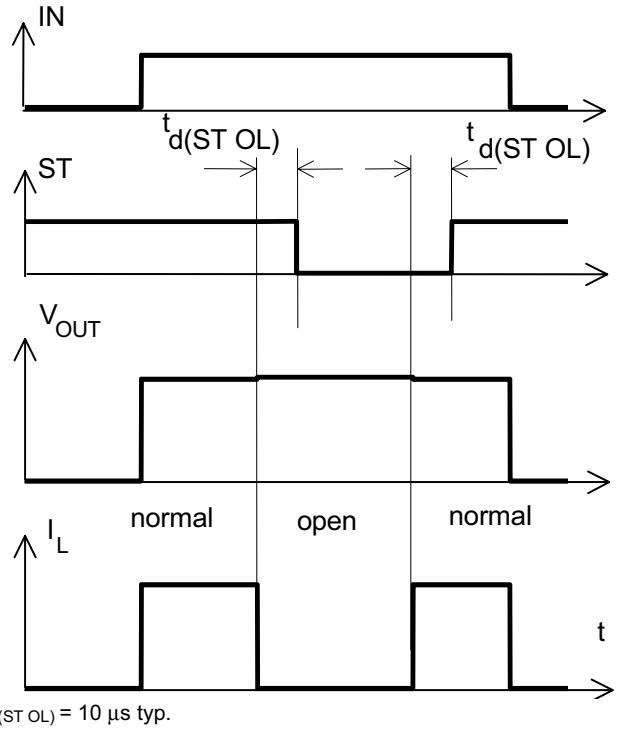

$t_{d(ST\ OL)}$ = 10 µs typ.

Figure 5b: Open load: turn on/off to open load

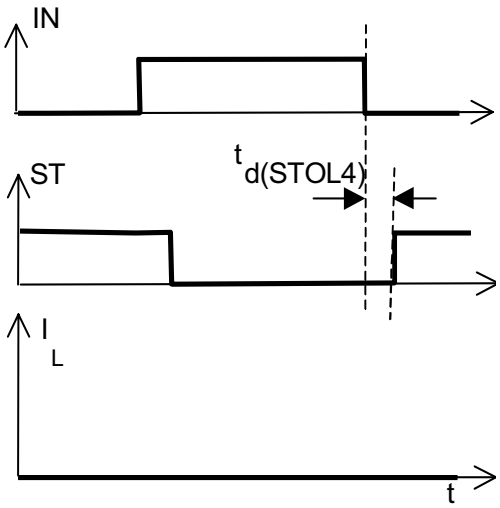

Package Outlines

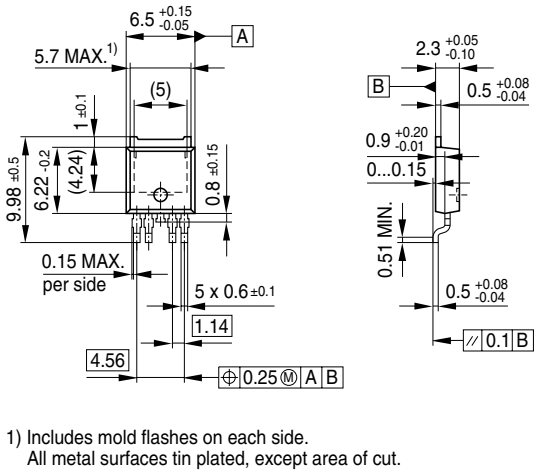

1) Includes mold flashes on each side.
All metal surfaces tin plated, except area of cut.

Figure 1 **PG-TO-252** (Plastic Dual Small Outline Package) (RoHS-compliant)

To meet the world-wide customer requirements for environmentally friendly products and to be compliant with government regulations the device is available as a green product. Green products are RoHS-Compliant (i.e Pb-free finish on leads and suitable for Pb-free soldering according to IPC/JEDEC J-STD-020).

Please specify the package needed (e.g. green package) when placing an order

You can find all of our packages, sorts of packing and others in our Infineon Internet Page “Products”: **http://www.infineon.com/products**.

Dimensions in mm

Revision History

Version	Date	Changes
V1.1	2007-05-29	Creation of the green datasheet. First page : Adding the green logo and the AEC qualified Adding the bullet AEC qualified and the RoHS compliant features Package page Modification of the package to be green.

Edition 2007-05-29

Published by
Infineon Technologies AG
81726 Munich, Germany

© Infineon Technologies AG 5/29/07.
All Rights Reserved.

Legal Disclaimer

The information given in this document shall in no event be regarded as a guarantee of conditions or characteristics (“Beschaffenheitsgarantie”). With respect to any examples or hints given herein, any typical values stated herein and/or any information regarding the application of the device, Infineon Technologies hereby disclaims any and all warranties and liabilities of any kind, including without limitation warranties of non-infringement of intellectual property rights of any third party.

Information

For further information on technology, delivery terms and conditions and prices please contact your nearest Infineon Technologies Office (**www.infineon.com**).

Warnings

Due to technical requirements components may contain dangerous substances. For information on the types in question please contact your nearest Infineon Technologies Office.

Infineon Technologies Components may only be used in life-support devices or systems with the express written approval of Infineon Technologies, if a failure of such components can reasonably be expected to cause the failure of that life-support device or system, or to affect the safety or effectiveness of that device or system. Life support devices or systems are intended to be implanted in the human body, or to support and/or maintain and sustain and/or protect human life. If they fail, it is reasonable to assume that the health of the user or other persons may be endangered.