CY7C1480BV33
CY7C1482BV33

72-Mbit (2M × 36/4M × 18) Pipelined Sync SRAM

Features

- Supports bus operation up to 250 MHz
- Available speed grades are 250, 200, and 167 MHz
- Registered inputs and outputs for pipelined operation
- 3.3 V core power supply
- 2.5 V/3.3 V I/O operation
- Fast clock-to-output times
  - 3.0 ns (for 250 MHz device)
- Provide high performance 3-1-1-1 access rate
- User selectable burst counter supporting Intel® Pentium® interleaved or linear burst sequences
- Separate processor and controller address strobes
- Synchronous self timed writes
- Asynchronous output enable
- Single cycle chip deselect
- CY7C1480BV33 available in JEDEC-standard Pb-free 100-pin thin quad flat pack (TQFP), Pb-free and non Pb-free 165-ball fine-pitch ball grid array (FBGA) package. CY7C1482BV33 available in non Pb-free 165-ball fine-pitch ball grid array (FBGA) package
- IEEE 1149.1 JTAG-compatible boundary scan
- “ZZ” sleep mode option

Functional Description

The CY7C1480BV33 and CY7C1482BV33 SRAM integrates 2M × 36/4M × 18 SRAM cells with advanced synchronous peripheral circuitry and a 2-bit counter for internal burst operation. All synchronous inputs are gated by registers controlled by a positive-edge-triggered Clock Input (CLK). The synchronous inputs include all addresses, all data inputs, address-pipelining Chip Enable ($\overline{CE_1}$), depth-expansion Chip Enables (CE_2 and $\overline{CE_3}$), Burst Control inputs ($\overline{ADSC}$, $\overline{ADSP}$, and $\overline{ADV}$), Write Enables ($\overline{BW_X}$, and $\overline{BWE}$), and Global Write ($\overline{GW}$). Asynchronous inputs include the Output Enable ($\overline{OE}$) and the ZZ pin.

Addresses and chip enables are registered at the rising edge of the clock when either address strobe processor ($\overline{ADSP}$) or Address Strobe Controller ($\overline{ADSC}$) are active. Subsequent burst addresses may be internally generated as controlled by the advance pin ($\overline{ADV}$).

Address, data inputs, and write controls are registered on-chip to initiate a self timed write cycle.This part supports byte write operations (see sections Pin Definitions on page 6 and Truth Table on page 9 for further details). Write cycles can be one to two or four bytes wide as controlled by the byte write control inputs. $\overline{GW}$ when active LOW causes all bytes to be written.

The CY7C1480BV33 and CY7C1482BV33 operates from a +3.3 V core power supply while all outputs may operate with either a +2.5 or +3.3 V supply. All inputs and outputs are JEDEC standard JESD8-5 compatible. For best practices recommendations, refer to the Cypress application note AN1064 “SRAM System Guidelines”.

For a complete list of related documentation, click here.

Selection Guide

Description	250 MHz	200 MHz	167 MHz	Unit
Maximum access time	3.0	3.0	3.4	ns
Maximum operating current	500	500	450	mA
Maximum CMOS standby current	120	120	120	mA

Logic Block Diagram – CY7C1480BV33

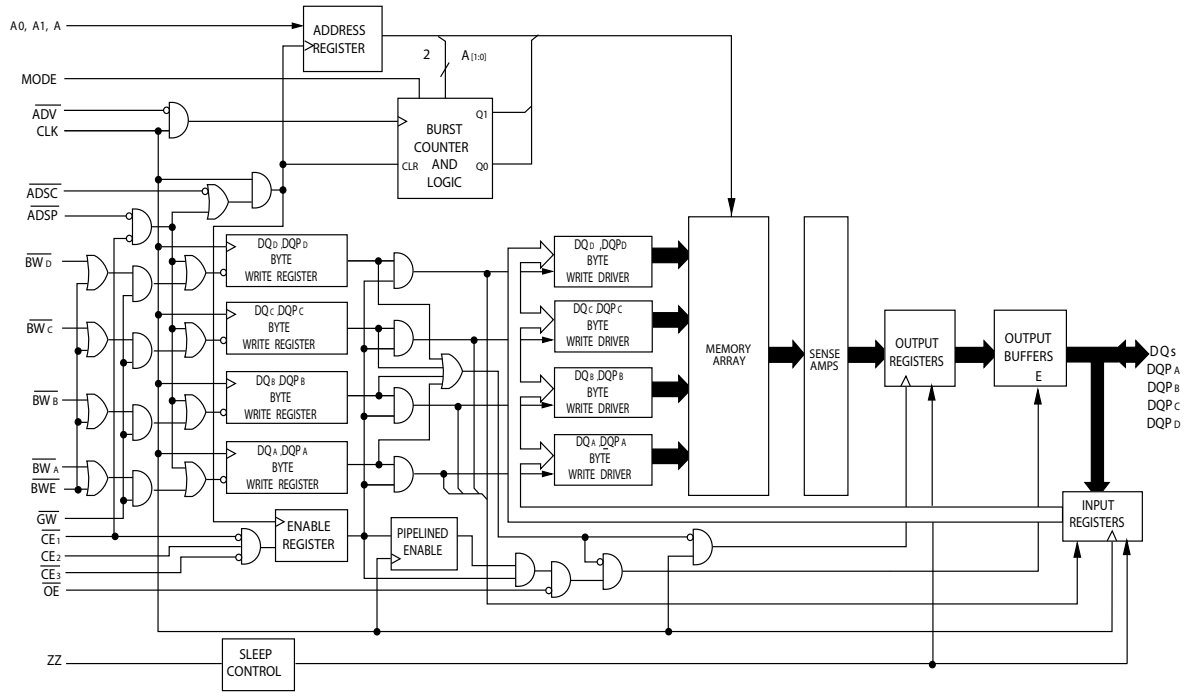

Logic Block Diagram – CY7C1482BV33

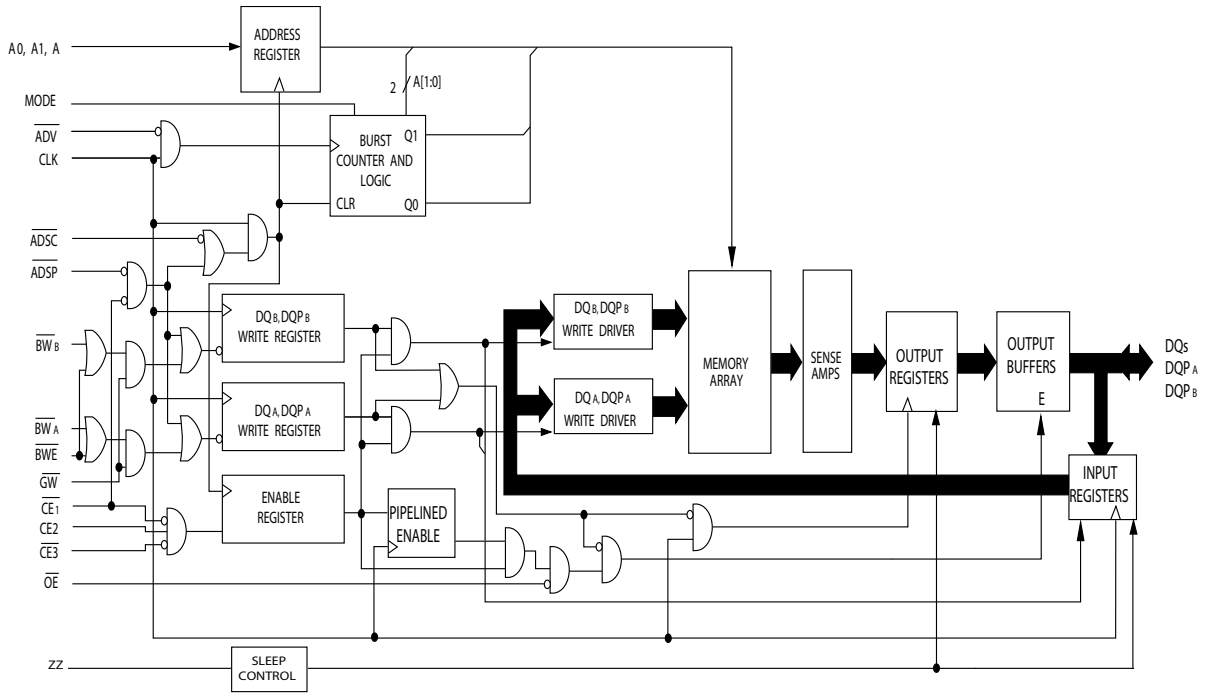

Contents

Pin Configurations **4**
Pin Definitions **6**
Functional Overview **7**
Single Read Accesses 7
Single Write Accesses Initiated by ADSP 7
Single Write Accesses Initiated by ADSC 8
Burst Sequences 8
Sleep Mode 8
Interleaved Burst Address Table 8
Linear Burst Address Table 8
ZZ Mode Electrical Characteristics 8
Truth Table **9**
Truth Table for Read/Write **10**
Truth Table for Read/Write **10**
IEEE 1149.1 Serial Boundary Scan (JTAG) **11**
Disabling the JTAG Feature 11
Test Access Port (TAP) 11
PERFORMING A TAP RESET 11
TAP REGISTERS 11
TAP Instruction Set 12
TAP Controller State Diagram **13**
TAP Controller Block Diagram **14**
3.3 V TAP AC Test Conditions **15**
3.3 V TAP AC Output Load Equivalent **15**
2.5 V TAP AC Test Conditions **15**
2.5 V TAP AC Output Load Equivalent **15**
TAP DC Electrical Characteristics and Operating Conditions **15**
TAP AC Switching Characteristics **16**
TAP Timing **16**
Identification Register Definitions **17**
Scan Register Sizes **17**
Identification Codes **17**
Boundary Scan Exit Order **18**
Boundary Scan Exit Order **19**
Maximum Ratings **20**
Operating Range **20**
Electrical Characteristics **20**
Capacitance **21**
Thermal Resistance **21**
AC Test Loads and Waveforms **22**
Switching Characteristics **23**
Switching Waveforms **24**
Ordering Information **28**
Ordering Code Definitions 28
Package Diagrams **29**
Acronyms **31**
Document Conventions **31**
Units of Measure 31
Document History Page **32**
Sales, Solutions, and Legal Information **34**
Worldwide Sales and Design Support 34
Products 34
PSoC® Solutions 34
Cypress Developer Community 34
Technical Support 34

Pin Configurations

Figure 1. 100-pin TQFP (14 × 20 × 1.4 mm) pinout

CY7C1480BV33

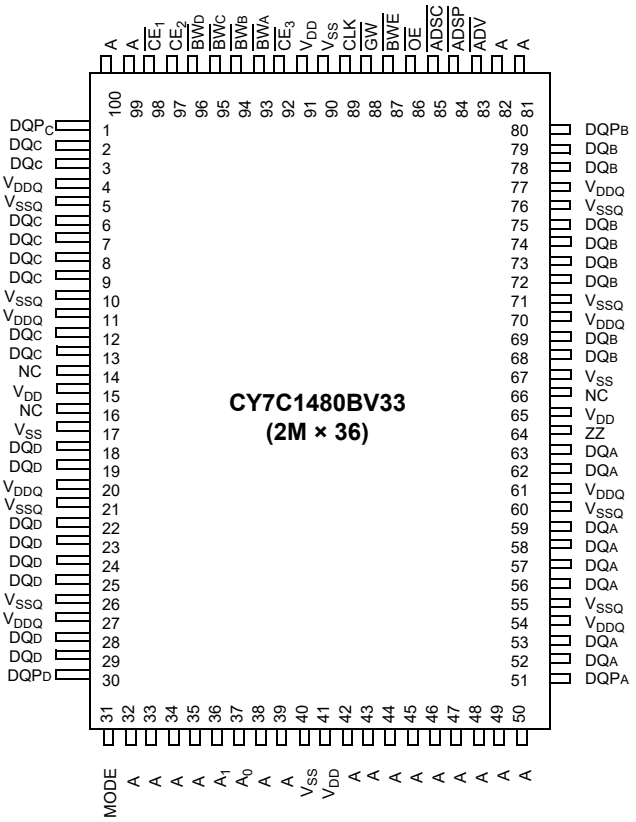

Pin Configurations (continued)

Figure 2. 165-ball FBGA (15 × 17 × 1.4 mm) pinout

CY7C1480BV33 (2M × 36)

	1	2	3	4	5	6	7	8	9	10	11
A	NC/288M	A	$\overline{CE_1}$	$\overline{BW_C}$	$\overline{BW_B}$	$\overline{CE_3}$	$\overline{BWE}$	$\overline{ADSC}$	$\overline{ADV}$	A	NC
B	NC/144M	A	CE2	$\overline{BW_D}$	$\overline{BW_A}$	CLK	$\overline{GW}$	$\overline{OE}$	$\overline{ADSP}$	A	NC/576M
C	DQP_C	NC	V_{DDQ}	V_{SS}	V_{SS}	V_{SS}	V_{SS}	V_{SS}	V_{DDQ}	NC/1G	DQP_B
D	DQ_C	DQ_C	V_{DDQ}	V_{DD}	V_{SS}	V_{SS}	V_{SS}	V_{DD}	V_{DDQ}	DQ_B	DQ_B
E	DQ_C	DQ_C	V_{DDQ}	V_{DD}	V_{SS}	V_{SS}	V_{SS}	V_{DD}	V_{DDQ}	DQ_B	DQ_B
F	DQ_C	DQ_C	V_{DDQ}	V_{DD}	V_{SS}	V_{SS}	V_{SS}	V_{DD}	V_{DDQ}	DQ_B	DQ_B
G	DQ_C	DQ_C	V_{DDQ}	V_{DD}	V_{SS}	V_{SS}	V_{SS}	V_{DD}	V_{DDQ}	DQ_B	DQ_B
H	NC	NC	NC	V_{DD}	V_{SS}	V_{SS}	V_{SS}	V_{DD}	NC	NC	ZZ
J	DQ_D	DQ_D	V_{DDQ}	V_{DD}	V_{SS}	V_{SS}	V_{SS}	V_{DD}	V_{DDQ}	DQ_A	DQ_A
K	DQ_D	DQ_D	V_{DDQ}	V_{DD}	V_{SS}	V_{SS}	V_{SS}	V_{DD}	V_{DDQ}	DQ_A	DQ_A
L	DQ_D	DQ_D	V_{DDQ}	V_{DD}	V_{SS}	V_{SS}	V_{SS}	V_{DD}	V_{DDQ}	DQ_A	DQ_A
M	DQ_D	DQ_D	V_{DDQ}	V_{DD}	V_{SS}	V_{SS}	V_{SS}	V_{DD}	V_{DDQ}	DQ_A	DQ_A
N	DQP_D	NC	V_{DDQ}	V_{SS}	NC	A	NC	V_{SS}	V_{DDQ}	NC	DQP_A
P	NC	A	A	A	TDI	A1	TDO	A	A	A	A
R	MODE	A	A	A	TMS	A0	TCK	A	A	A	A

CY7C1482BV33 (4M × 18)

	1	2	3	4	5	6	7	8	9	10	11
A	NC/288M	A	$\overline{CE_1}$	$\overline{BW_B}$	NC	$\overline{CE_3}$	$\overline{BWE}$	$\overline{ADSC}$	$\overline{ADV}$	A	A
B	NC/144M	A	CE2	NC	$\overline{BW_A}$	CLK	$\overline{GW}$	$\overline{OE}$	$\overline{ADSP}$	A	NC/576M
C	NC	NC	V_{DDQ}	V_{SS}	V_{SS}	V_{SS}	V_{SS}	V_{SS}	V_{DDQ}	NC/1G	DQP_A
D	NC	DQ_B	V_{DDQ}	V_{DD}	V_{SS}	V_{SS}	V_{SS}	V_{DD}	V_{DDQ}	NC	DQ_A
E	NC	DQ_B	V_{DDQ}	V_{DD}	V_{SS}	V_{SS}	V_{SS}	V_{DD}	V_{DDQ}	NC	DQ_A
F	NC	DQ_B	V_{DDQ}	V_{DD}	V_{SS}	V_{SS}	V_{SS}	V_{DD}	V_{DDQ}	NC	DQ_A
G	NC	DQ_B	V_{DDQ}	V_{DD}	V_{SS}	V_{SS}	V_{SS}	V_{DD}	V_{DDQ}	NC	DQ_A
H	NC	NC	NC	V_{DD}	V_{SS}	V_{SS}	V_{SS}	V_{DD}	NC	NC	ZZ
J	DQ_B	NC	V_{DDQ}	V_{DD}	V_{SS}	V_{SS}	V_{SS}	V_{DD}	V_{DDQ}	DQ_A	NC
K	DQ_B	NC	V_{DDQ}	V_{DD}	V_{SS}	V_{SS}	V_{SS}	V_{DD}	V_{DDQ}	DQ_A	NC
L	DQ_B	NC	V_{DDQ}	V_{DD}	V_{SS}	V_{SS}	V_{SS}	V_{DD}	V_{DDQ}	DQ_A	NC
M	DQ_B	NC	V_{DDQ}	V_{DD}	V_{SS}	V_{SS}	V_{SS}	V_{DD}	V_{DDQ}	DQ_A	NC
N	DQP_B	NC	V_{DDQ}	V_{SS}	NC	A	NC	V_{SS}	V_{DDQ}	NC	NC
P	NC	A	A	A	TDI	A1	TDO	A	A	A	A
R	MODE	A	A	A	TMS	A0	TCK	A	A	A	A

Pin Definitions

Pin Name	I/O	Description
A_0, A_1, A	Input-Synchronous	**Address inputs used to select one of the address locations**. Sampled at the rising edge of the CLK if $\overline{ADSP}$ or $\overline{ADSC}$ is active LOW, and $\overline{CE}_1$, CE_2, and $\overline{CE}_3$ are sampled active. A1:A0 are fed to the 2-bit counter.
$\overline{BW}_A$,$\overline{BW}_B$, $\overline{BW}_C$,$\overline{BW}_D$	Input-Synchronous	**Byte write select inputs, active LOW**. Qualified with $\overline{BWE}$ to conduct byte writes to the SRAM. Sampled on the rising edge of CLK.
$\overline{GW}$	Input-Synchronous	**Global write enable input, active LOW**. When asserted LOW on the rising edge of CLK, a global write is conducted (all bytes are written, regardless of the values on $\overline{BW}_X$ and $\overline{BWE}$).
$\overline{BWE}$	Input-Synchronous	**Byte write enable input, active LOW**. Sampled on the rising edge of CLK. This signal must be asserted LOW to conduct a byte write.
CLK	Input-Clock	**Clock input**. Used to capture all synchronous inputs to the device. Also used to increment the burst counter when $\overline{ADV}$ is asserted LOW during a burst operation.
$\overline{CE}_1$	Input-Synchronous	**Chip enable 1 input, active LOW**. Sampled on the rising edge of CLK. Used in conjunction with CE_2 and $\overline{CE}_3$ to select or deselect the device. ADSP is ignored if $\overline{CE}_1$ is HIGH. $\overline{CE}_1$ is sampled only when a new external address is loaded.
CE_2	Input-Synchronous	**Chip enable 2 input, active HIGH**. Sampled on the rising edge of CLK. Used in conjunction with $\overline{CE}_1$ and $\overline{CE}_3$ to select or deselect the device. CE_2 is sampled only when a new external address is loaded.
$\overline{CE}_3$	Input-Synchronous	**Chip enable 3 input, active LOW**. Sampled on the rising edge of CLK. Used in conjunction with $\overline{CE}_1$ and CE_2 to select or deselect the device. $\overline{CE}_3$ is sampled only when a new external address is loaded.
$\overline{OE}$	Input-Asynchronous	**Output enable, asynchronous input, active LOW**. Controls the direction of the I/O pins. When LOW, the I/O pins behave as outputs. When deasserted HIGH, I/O pins are tri-stated, and act as input data pins. $\overline{OE}$ is masked during the first clock of a read cycle when emerging from a deselected state.
$\overline{ADV}$	Input-Synchronous	**Advance input signal, sampled on the rising edge of CLK, active LOW**. When asserted, it automatically increments the address in a burst cycle.
$\overline{ADSP}$	Input-Synchronous	**Address strobe from processor, sampled on the rising edge of CLK, active LOW**. When asserted LOW, addresses presented to the device are captured in the address registers. A1:A0 are also loaded into the burst counter. When $\overline{ADSP}$ and $\overline{ADSC}$ are both asserted, only $\overline{ADSP}$ is recognized. ASDP is ignored when $\overline{CE}_1$ is deasserted HIGH.
$\overline{ADSC}$	Input-Synchronous	**Address strobe from controller, sampled on the rising edge of CLK, active LOW**. When asserted LOW, addresses presented to the device are captured in the address registers. A1:A0 are also loaded into the burst counter. When $\overline{ADSP}$ and $\overline{ADSC}$ are both asserted, only $\overline{ADSP}$ is recognized.
ZZ	Input-Asynchronous	**ZZ "Sleep" input, active HIGH**. When asserted HIGH, places the device in a non-time-critical "sleep" condition with data integrity preserved. For normal operation, this pin must be LOW or left floating. ZZ pin has an internal pull-down.
DQs, DQPs	I/O-Synchronous	**Bidirectional data I/O lines**. As inputs, they feed into an on-chip data register that is triggered by the rising edge of CLK. As outputs, they deliver the data contained in the memory location specified by the addresses presented during the previous clock rise of the read cycle. The direction of the pins is controlled by $\overline{OE}$. When $\overline{OE}$ is asserted LOW, the pins behave as outputs. When HIGH, DQs and DQP_X are placed in a tri-state condition.
V_{DD}	Power Supply	**Power supply inputs to the core of the device**.
V_{SS}	Ground	**Ground for the core of the device**.
V_{SSQ}[1]	I/O Ground	**Ground for the I/O circuitry**.
V_{DDQ}	I/O power supply	**Power supply for the I/O circuitry**.

Note
1. Applicable for TQFP package. For BGA package V_{SS} serves as ground for the core and the I/O circuitry.

Pin Definitions (continued)

Pin Name	I/O	Description
MODE	Input static	**Selects burst order**. When tied to GND selects linear burst sequence. When tied to V_{DD} or left floating selects interleaved burst sequence. This is a strap pin and must remain static during device operation. Mode Pin has an internal pull-up.
TDO	JTAG serial output synchronous	**Serial data-out to the JTAG circuit**. Delivers data on the negative edge of TCK. If the JTAG feature is not used, this pin must be disconnected. This pin is not available on TQFP packages.
TDI	JTAG serial input synchronous	**Serial data-in to the JTAG circuit**. Sampled on the rising edge of TCK. If the JTAG feature is not used, this pin can be disconnected or connected to V_{DD}. This pin is not available on TQFP packages.
TMS	JTAG serial input synchronous	**Serial data-in to the JTAG circuit**. Sampled on the rising edge of TCK. If the JTAG feature is not used, this pin can be disconnected or connected to V_{DD}. This pin is not available on TQFP packages.
TCK	JTAG clock	**Clock input to the JTAG circuitry**. If the JTAG feature is not used, this pin must be connected to V_{SS}. This pin is not available on TQFP packages.
NC	–	**No connects**. Not internally connected to the die. 144M, 288M, 576M, and 1G are address expansion pins and are not internally connected to the die.

Functional Overview

All synchronous inputs pass through input registers controlled by the rising edge of the clock. All data outputs pass through output registers controlled by the rising edge of the clock. Maximum access delay from the clock rise (t_{CO}) is 3.0 ns (250 MHz device).

The CY7C1480BV33 and CY7C1482BV33 support secondary cache in systems using either a linear or interleaved burst sequence. The interleaved burst order supports Pentium and i486™ processors. The linear burst sequence is suited for processors that use a linear burst sequence. The burst order is user selectable, and is determined by sampling the MODE input. Accesses may be initiated with the Processor Address Strobe ($\overline{ADSP}$) or the Controller Address Strobe ($\overline{ADSC}$). Address advancement through the burst sequence is controlled by the ADV input. A two-bit on-chip wraparound burst counter captures the first address in a burst sequence and automatically increments the address for the rest of the burst access.

Byte Write operations are qualified with the Byte Write Enable ($\overline{BWE}$) and Byte Write Select ($\overline{BW_X}$) inputs. A Global Write Enable ($\overline{GW}$) overrides all byte write inputs and writes data to all four bytes. All writes are simplified with on-chip synchronous self-timed write circuitry.

Three synchronous Chip Selects ($\overline{CE_1}$, CE_2, and $\overline{CE_3}$) and an asynchronous Output Enable ($\overline{OE}$) provide easy bank selection and output tri-state control. $\overline{ADSP}$ is ignored if $\overline{CE_1}$ is HIGH.

Single Read Accesses

This access is initiated when the following conditions are satisfied at clock rise: (1) $\overline{ADSP}$ or $\overline{ADSC}$ is asserted LOW, (2) $\overline{CE_1}$, CE_2, $\overline{CE_3}$ are all asserted active, and (3) the write signals ($\overline{GW}$, $\overline{BWE}$) are all deasserted HIGH. $\overline{ADSP}$ is ignored if $\overline{CE_1}$ is HIGH. The address presented to the address inputs (A) is stored into the address advancement logic and the Address Register while being presented to the memory array. The corresponding data is allowed to propagate to the input of the Output Registers. At the rising edge of the next clock the data is allowed to propagate through the output register and onto the data bus within 3.0 ns (250 MHz device) if $\overline{OE}$ is active LOW. The only exception occurs when the SRAM is emerging from a deselected state to a selected state; its outputs are always tri-stated during the first cycle of the access. After the first cycle of the access, the outputs are controlled by the $\overline{OE}$ signal. Consecutive single read cycles are supported. After the SRAM is deselected at clock rise by the chip select and either $\overline{ADSP}$ or $\overline{ADSC}$ signals, its output tri-states immediately.

Single Write Accesses Initiated by $\overline{ADSP}$

This access is initiated when both of the following conditions are satisfied at clock rise: (1) $\overline{ADSP}$ is asserted LOW, and (2) $\overline{CE_1}$, CE_2, $\overline{CE_3}$ are all asserted active. The address presented to A is loaded into the address register and the address advancement logic while being delivered to the memory array. The write signals ($\overline{GW}$, $\overline{BWE}$, and $\overline{BW_X}$) and ADV inputs are ignored during this first cycle.

$\overline{ADSP}$ triggered write accesses require two clock cycles to complete. If $\overline{GW}$ is asserted LOW on the second clock rise, the data presented to the DQs inputs is written into the corresponding address location in the memory array. If $\overline{GW}$ is HIGH, then the write operation is controlled by $\overline{BWE}$ and $\overline{BW_X}$ signals.

The CY7C1480BV33 and CY7C1482BV33 provide byte write capability that is described in the section Truth Table for Read/Write on page 10. Asserting the Byte Write Enable input ($\overline{BWE}$) with the selected Byte Write ($\overline{BW_X}$) input, selectively writes to only the desired bytes. Bytes not selected during a Byte Write operation remain unaltered. A synchronous self-timed Write mechanism is provided to simplify the Write operations.

Because the CY7C1480BV33 and CY7C1482BV33 are a common I/O device, the Output Enable ($\overline{OE}$) must be deasserted HIGH before presenting data to the DQs inputs. Doing so tri-states the output drivers. As a safety precaution, DQs are automatically tri-stated whenever a Write cycle is detected, regardless of the state of $\overline{OE}$.

Single Write Accesses Initiated by $\overline{ADSC}$

$\overline{ADSC}$ Write accesses are initiated when the following conditions are satisfied: (1) $\overline{ADSC}$ is asserted LOW, (2) $\overline{ADSP}$ is deasserted HIGH, (3) $\overline{CE_1}$, CE_2, $\overline{CE_3}$ are all asserted active, and (4) the appropriate combination of the Write inputs ($\overline{GW}$, $\overline{BWE}$, and $\overline{BW_X}$) are asserted active to conduct a Write to the desired byte. $\overline{ADSC}$-triggered Write accesses require a single clock cycle to complete. The address presented to A is loaded into the address register and the address advancement logic when being delivered to the memory array. The $\overline{ADV}$ input is ignored during this cycle. If a global Write is conducted, the data presented to the DQs is written into the corresponding address location in the memory core. If a Byte Write is conducted, only the selected bytes are written. Bytes not selected during a Byte Write operation remain unaltered. A synchronous self-timed Write mechanism is provided to simplify the Write operations.

Because the CY7C1480BV33 and CY7C1482BV33 are a common I/O device, the Output Enable ($\overline{OE}$) must be deasserted HIGH before presenting data to the DQs inputs. Doing so tri-states the output drivers. As a safety precaution, DQs are automatically tri-stated whenever a Write cycle is detected, regardless of the state of $\overline{OE}$.

Burst Sequences

The CY7C1480BV33 and CY7C1482BV33 provide a 2-bit wraparound counter, fed by A1:A0, that implements either an interleaved or linear burst sequence. The interleaved burst sequence is designed specifically to support Intel Pentium applications. The linear burst sequence is designed to support processors that follow a linear burst sequence. The burst sequence is user selectable through the MODE input.

Asserting $\overline{ADV}$ LOW at clock rise automatically increments the burst counter to the next address in the burst sequence. Both Read and Write burst operations are supported.

Sleep Mode

The ZZ input pin is an asynchronous input. Asserting ZZ places the SRAM in a power conservation “sleep” mode. Two clock cycles are required to enter into or exit from this “sleep” mode. When in this mode, data integrity is guaranteed. Accesses pending when entering the “sleep” mode are not considered valid, and the completion of the operation is not guaranteed. The device must be deselected before entering the “sleep” mode. $\overline{CE_1}$, CE_2, $\overline{CE_3}$, $\overline{ADSP}$, and $\overline{ADSC}$ must remain inactive for the duration of t_{ZZREC} after the ZZ input returns LOW.

Interleaved Burst Address Table

(MODE = Floating or V_{DD})

First Address A1:A0	Second Address A1:A0	Third Address A1:A0	Fourth Address A1:A0
00	01	10	11
01	00	11	10
10	11	00	01
11	10	01	00

Linear Burst Address Table

(MODE = GND)

First Address A1:A0	Second Address A1:A0	Third Address A1:A0	Fourth Address A1:A0
00	01	10	11
01	10	11	00
10	11	00	01
11	00	01	10

ZZ Mode Electrical Characteristics

Parameter	Description	Test Conditions	Min	Max	Unit
I_{DDZZ}	Sleep mode standby current	ZZ $\geq V_{DD} - 0.2$ V	–	120	mA
t_{ZZS}	Device operation to ZZ	ZZ $\geq V_{DD} - 0.2$ V	–	$2t_{CYC}$	ns
t_{ZZREC}	ZZ recovery time	ZZ ≤ 0.2 V	$2t_{CYC}$	–	ns
t_{ZZI}	ZZ Active to Sleep current	This parameter is sampled	–	$2t_{CYC}$	ns
t_{RZZI}	ZZ Inactive to exit Sleep current	This parameter is sampled	0	–	ns

Truth Table

The truth table for CY7C1480BV33 and CY7C1482BV33 follows. [2, 3, 4, 5, 6]

Operation	Address Used	$\overline{CE_1}$	CE_2	$\overline{CE_3}$	ZZ	$\overline{ADSP}$	$\overline{ADSC}$	$\overline{ADV}$	$\overline{WRITE}$	$\overline{OE}$	CLK	DQ
Deselect cycle, power-down	None	H	X	X	L	X	L	X	X	X	L–H	Tri-state
Deselect cycle, power-down	None	L	L	X	L	L	X	X	X	X	L–H	Tri-state
Deselect cycle, power-down	None	L	X	H	L	L	X	X	X	X	L–H	Tri-state
Deselect cycle, power-down	None	L	L	X	L	H	L	X	X	X	L–H	Tri-state
Deselect cycle, power-down	None	L	X	H	L	H	L	X	X	X	L–H	Tri-state
Sleep mode, power-down	None	X	X	X	H	X	X	X	X	X	X	Tri-state
Read cycle, begin burst	External	L	H	L	L	L	X	X	X	L	L–H	Q
Read cycle, begin burst	External	L	H	L	L	L	X	X	X	H	L–H	Tri-state
Write cycle, begin burst	External	L	H	L	L	H	L	X	L	X	L–H	D
Read cycle, begin burst	External	L	H	L	L	H	L	X	H	L	L–H	Q
Read cycle, begin burst	External	L	H	L	L	H	L	X	H	H	L–H	Tri-state
Read cycle, continue burst	Next	X	X	X	L	H	H	L	H	L	L–H	Q
Read cycle, continue burst	Next	X	X	X	L	H	H	L	H	H	L–H	Tri-state
Read cycle, continue burst	Next	H	X	X	L	X	H	L	H	L	L–H	Q
Read cycle, continue burst	Next	H	X	X	L	X	H	L	H	H	L–H	Tri-state
Write cycle, continue burst	Next	X	X	X	L	H	H	L	L	X	L–H	D
Write cycle, continue burst	Next	H	X	X	L	X	H	L	L	X	L–H	D
Read cycle, suspend burst	Current	X	X	X	L	H	H	H	H	L	L–H	Q
Read cycle, suspend burst	Current	X	X	X	L	H	H	H	H	H	L–H	Tri-state
Read cycle, suspend burst	Current	H	X	X	L	X	H	H	H	L	L–H	Q
Read cycle, suspend burst	Current	H	X	X	L	X	H	H	H	H	L–H	Tri-state
Write cycle, suspend burst	Current	X	X	X	L	H	H	H	L	X	L–H	D
Write cycle, suspend burst	Current	H	X	X	L	X	H	H	L	X	L–H	D

Notes
2. X = Do Not Care, H = Logic HIGH, L = Logic LOW.
3. $\overline{WRITE}$ = L when any one or more Byte Write enable signals and $\overline{BWE}$ = L or $\overline{GW}$ = L. $\overline{WRITE}$ = H when all Byte write enable signals, $\overline{BWE}$, $\overline{GW}$ = H.
4. The DQ pins are controlled by the current cycle and the $\overline{OE}$ signal. $\overline{OE}$ is asynchronous and is not sampled with the clock.
5. The SRAM always initiates a read cycle when $\overline{ADSP}$ is asserted, regardless of the state of $\overline{GW}$, $\overline{BWE}$, or $\overline{BW_X}$. Writes may occur only on subsequent clocks after the ADSP or with the assertion of $\overline{ADSC}$. As a result, OE must be driven HIGH before the start of the write cycle to allow the outputs to tri-state. $\overline{OE}$ is a do not care for the remainder of the write cycle.
6. $\overline{OE}$ is asynchronous and is not sampled with the clock rise. It is masked internally during write cycles. During a read cycle all data bits are tri-state when $\overline{OE}$ is inactive or when the device is deselected, and all data bits behave as outputs when $\overline{OE}$ is active (LOW).

Truth Table for Read/Write

The read/write truth table for CY7C1480BV33 follows. [7]

Function (CY7C1480BV33)	$\overline{GW}$	$\overline{BWE}$	$\overline{BW_D}$	$\overline{BW_C}$	$\overline{BW_B}$	$\overline{BW_A}$
Read	H	H	X	X	X	X
Read	H	L	H	H	H	H
Write byte A – (DQ_A and DQP_A)	H	L	H	H	H	L
Write byte B – (DQ_B and DQP_B)	H	L	H	H	L	H
Write bytes B, A	H	L	H	H	L	L
Write byte C – (DQ_C and DQP_C)	H	L	H	L	H	H
Write bytes C, A	H	L	H	L	H	L
Write bytes C, B	H	L	H	L	L	H
Write bytes C, B, A	H	L	H	L	L	L
Write byte D – (DQ_D and DQP_D)	H	L	L	H	H	H
Write bytes D, A	H	L	L	H	H	L
Write bytes D, B	H	L	L	H	L	H
Write bytes D, B, A	H	L	L	H	L	L
Write bytes D, C	H	L	L	L	H	H
Write bytes D, C, A	H	L	L	L	H	L
Write bytes D, C, B	H	L	L	L	L	H
Write all bytes	H	L	L	L	L	L
Write all bytes	L	X	X	X	X	X

Truth Table for Read/Write

The read/write truth table for CY7C1482BV33 follows.[7]

Function (CY7C1482BV33)	$\overline{GW}$	$\overline{BWE}$	$\overline{BW_B}$	$\overline{BW_A}$
Read	H	H	X	X
Read	H	L	H	H
Write byte A – (DQ_A and DQP_A)	H	L	H	L
Write byte B – (DQ_B and DQP_B)	H	L	L	H
Write bytes B, A	H	L	L	L
Write all bytes	H	L	L	L
Write all bytes	L	X	X	X

Note
7. $\overline{BW}$x represents any byte write signal $\overline{BW}$[0..3].To enable any byte write $\overline{BW}$x, a Logic LOW signal must be applied at clock rise. Any number of bye writes can be enabled at the same time for any write.

IEEE 1149.1 Serial Boundary Scan (JTAG)

The CY7C1480BV33 and CY7C1482BV33 incorporate a serial boundary scan test access port (TAP). This port operates in accordance with IEEE Standard 1149.1-1990 but does not have the set of functions required for full 1149.1 compliance. These functions from the IEEE specification are excluded because their inclusion places an added delay in the critical speed path of the SRAM. Note that the TAP controller functions in a manner that does not conflict with the operation of other devices using 1149.1 fully compliant TAPs. The TAP operates using JEDEC-standard 3.3 V or 2.5 V I/O logic levels.

The CY7C1480BV33 and CY7C1482BV33 contain a TAP controller, instruction register, boundary scan register, bypass register, and ID register.

Disabling the JTAG Feature

It is possible to operate the SRAM without using the JTAG feature. To disable the TAP controller, tie TCK LOW (V_{SS}) to prevent device clocking. TDI and TMS are internally pulled up and may be unconnected. They may alternatively be connected to V_{DD} through a pull-up resistor. TDO must be left unconnected. At power-up, the device comes up in a reset state, which does not interfere with the operation of the device.

The 0/1 next to each state represents the value of TMS at the rising edge of TCK.

Test Access Port (TAP)

Test Clock (TCK)

The test clock is used only with the TAP controller. All inputs are captured on the rising edge of TCK. All outputs are driven from the falling edge of TCK.

Test Mode Select (TMS)

The TMS input gives commands to the TAP controller and is sampled on the rising edge of TCK. Leave this ball unconnected if the TAP is not used. The ball is pulled up internally, resulting in a logic HIGH level.

Test Data-In (TDI)

The TDI ball serially inputs information into the registers and can be connected to the input of any of the registers. The register between TDI and TDO is chosen by the instruction that is loaded into the TAP instruction register. For information about loading the instruction register, see the TAP Controller State Diagram on page 13. TDI is internally pulled up and can be unconnected if the TAP is unused in an application. TDI is connected to the most significant bit (MSB) of any register.

Test Data-Out (TDO)

The TDO output ball serially clocks data-out from the registers. The output is active depending upon the current state of the TAP state machine. The output changes on the falling edge of TCK. TDO is connected to the least significant bit (LSB) of any register.

Performing a TAP Reset

Perform a RESET by forcing TMS HIGH (V_{DD}) for five rising edges of TCK. This RESET does not affect the operation of the SRAM and may be performed while the SRAM is operating.

At power-up, the TAP is reset internally to ensure that TDO comes up in a High Z state.

TAP Registers

Registers are connected between the TDI and TDO balls and enable data to be scanned into and out of the SRAM test circuitry. Only one register can be selected at a time through the instruction register. Data is serially loaded into the TDI ball on the rising edge of TCK. Data is output on the TDO ball on the falling edge of TCK.

Instruction Register

Three-bit instructions can be serially loaded into the instruction register. This register is loaded when it is placed between the TDI and TDO balls as shown in the TAP Controller Block Diagram on page 14. At power-up, the instruction register is loaded with the IDCODE instruction. It is also loaded with the IDCODE instruction if the controller is placed in a reset state, as described in the previous section.

When the TAP controller is in the Capture-IR state, the two least significant bits are loaded with a binary “01” pattern to enable fault isolation of the board-level serial test data path.

Bypass Register

To save time when serially shifting data through registers, it is sometimes advantageous to skip certain chips. The bypass register is a single-bit register that can be placed between the TDI and TDO balls. This enables data to be shifted through the SRAM with minimal delay. The bypass register is set LOW (V_{SS}) when the BYPASS instruction is executed.

Boundary Scan Register

The boundary scan register is connected to all the input and bidirectional balls on the SRAM. The x36 configuration has a 73-bit-long register, and the x18 configuration has a 54-bit-long register.

The boundary scan register is loaded with the contents of the RAM I/O ring when the TAP controller is in the Capture-DR state and is then placed between the TDI and TDO balls when the controller is moved to the Shift-DR state. The EXTEST, SAMPLE/PRELOAD, and SAMPLE Z instructions can be used to capture the contents of the I/O ring.

The Boundary Scan Order tables show the order in which the bits are connected. Each bit corresponds to one of the bumps on the SRAM package. The MSB of the register is connected to TDI and the LSB is connected to TDO.

Identification (ID) Register

The ID register is loaded with a vendor-specific, 32-bit code during the Capture-DR state when the IDCODE command is loaded in the instruction register. The IDCODE is hardwired into the SRAM and can be shifted out when the TAP controller is in the Shift-DR state. The ID register has a vendor code and other information described in the section Identification Register Definitions on page 17.

TAP Instruction Set

Overview

Eight different instructions are possible with the three-bit instruction register. All combinations are listed in Identification Codes on page 17. Three of these instructions are listed as RESERVED and must not be used. The other five instructions are described in detail in this section.

The TAP controller used in this SRAM is not fully compliant to the 1149.1 convention because some of the mandatory 1149.1 instructions are not fully implemented.

The TAP controller cannot be used to load address data or control signals into the SRAM and cannot preload the I/O buffers. The SRAM does not implement the 1149.1 commands EXTEST or INTEST or the PRELOAD portion of SAMPLE/PRELOAD; rather, it performs a capture of the I/O ring when these instructions are executed.

Instructions are loaded into the TAP controller during the Shift-IR state when the instruction register is placed between TDI and TDO. During this state, instructions are shifted through the instruction register through the TDI and TDO balls. To execute the instruction after it is shifted in, the TAP controller must be moved into the Update-IR state.

EXTEST

EXTEST is a mandatory 1149.1 instruction, which must be executed whenever the instruction register is loaded with all zeros. EXTEST is not implemented in this SRAM TAP controller, and therefore this device is not compliant to 1149.1. The TAP controller does recognize an all-zero instruction.

When an EXTEST instruction is loaded into the instruction register, the SRAM responds as if a SAMPLE/PRELOAD instruction has been loaded. There is one difference between the two instructions. Unlike the SAMPLE/PRELOAD instruction, EXTEST places the SRAM outputs in a High Z state.

IDCODE

The IDCODE instruction causes a vendor-specific, 32-bit code to be loaded into the instruction register. It also places the instruction register between the TDI and TDO balls and enables the IDCODE to be shifted out of the device when the TAP controller enters the Shift-DR state.

The IDCODE instruction is loaded into the instruction register at power-up or whenever the TAP controller is in a test logic reset state.

SAMPLE Z

The SAMPLE Z instruction causes the boundary scan register to be connected between the TDI and TDO balls when the TAP controller is in a Shift-DR state. It also places all SRAM outputs into a High Z state.

SAMPLE/PRELOAD

SAMPLE/PRELOAD is a 1149.1 mandatory instruction. The PRELOAD portion of this instruction is not implemented, so the device TAP controller is not fully 1149.1 compliant.

When the SAMPLE/PRELOAD instruction is loaded into the instruction register and the TAP controller is in the Capture-DR state, a snapshot of data on the inputs and bidirectional balls is captured in the boundary scan register.

Be aware that the TAP controller clock can only operate at a frequency up to 10 MHz, while the SRAM clock operates more than an order of magnitude faster. Because there is a large difference in the clock frequencies, it is possible that during the Capture-DR state, an input or output may undergo a transition. The TAP may then try to capture a signal when in transition (metastable state). This does not harm the device, but there is no guarantee as to the value that may be captured. Repeatable results may not be possible.

To guarantee that the boundary scan register captures the correct value of a signal, the SRAM signal must be stabilized long enough to meet the TAP controller's capture setup plus hold time (t_{CS} plus t_{CH}).

The SRAM clock input might not be captured correctly if there is no way in a design to stop (or slow) the clock during a SAMPLE/PRELOAD instruction. If this is an issue, it is still possible to capture all other signals and simply ignore the value of the CLK captured in the boundary scan register.

After the data is captured, the data is shifted out by putting the TAP into the Shift-DR state. This places the boundary scan register between the TDI and TDO balls.

Note that because the PRELOAD part of the command is not implemented, putting the TAP to the Update-DR state when performing a SAMPLE/PRELOAD instruction has the same effect as the Pause-DR command.

BYPASS

When the BYPASS instruction is loaded in the instruction register and the TAP is placed in a Shift-DR state, the bypass register is placed between the TDI and TDO balls. The advantage of the BYPASS instruction is that it shortens the boundary scan path when multiple devices are connected together on a board.

Reserved

These instructions are not implemented but are reserved for future use. Do not use these instructions.

TAP Controller State Diagram

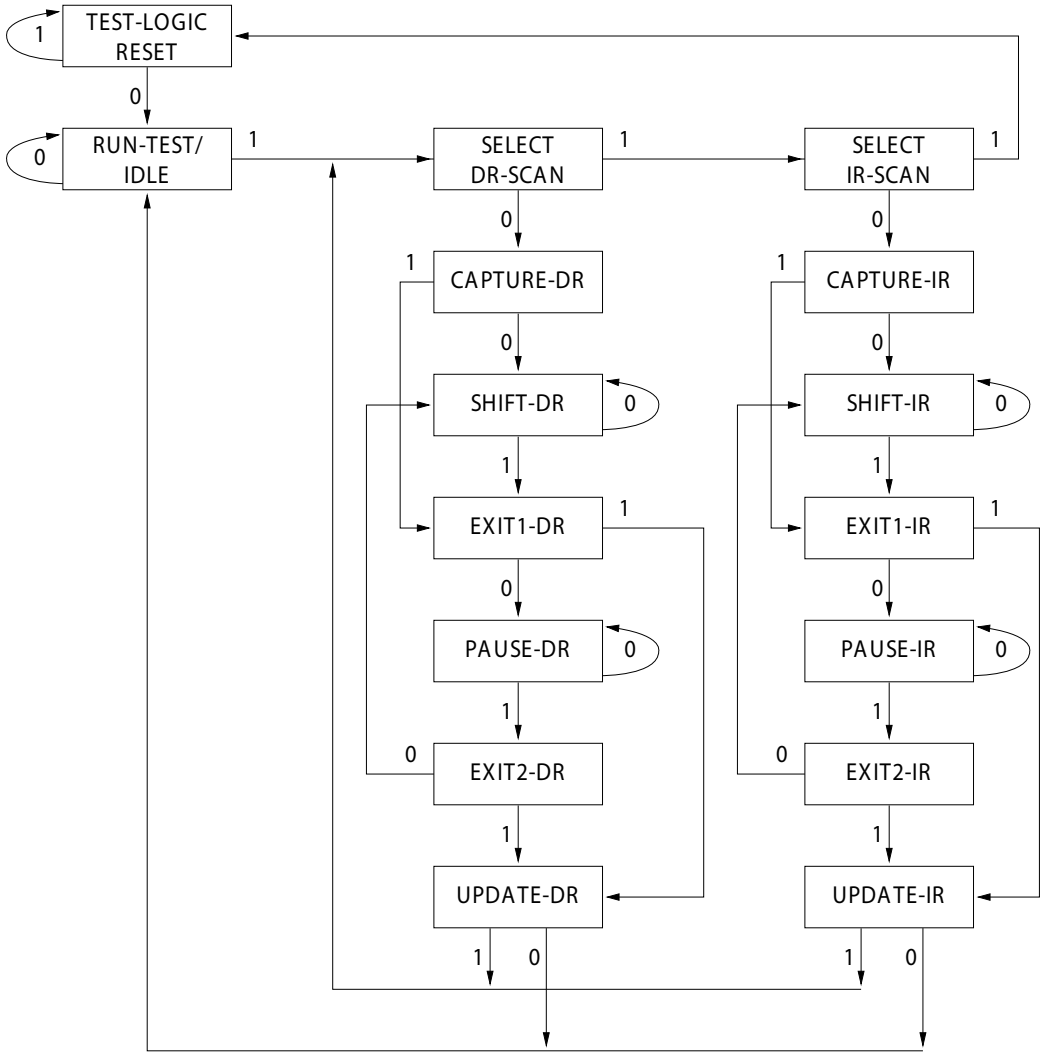

TAP Controller Block Diagram

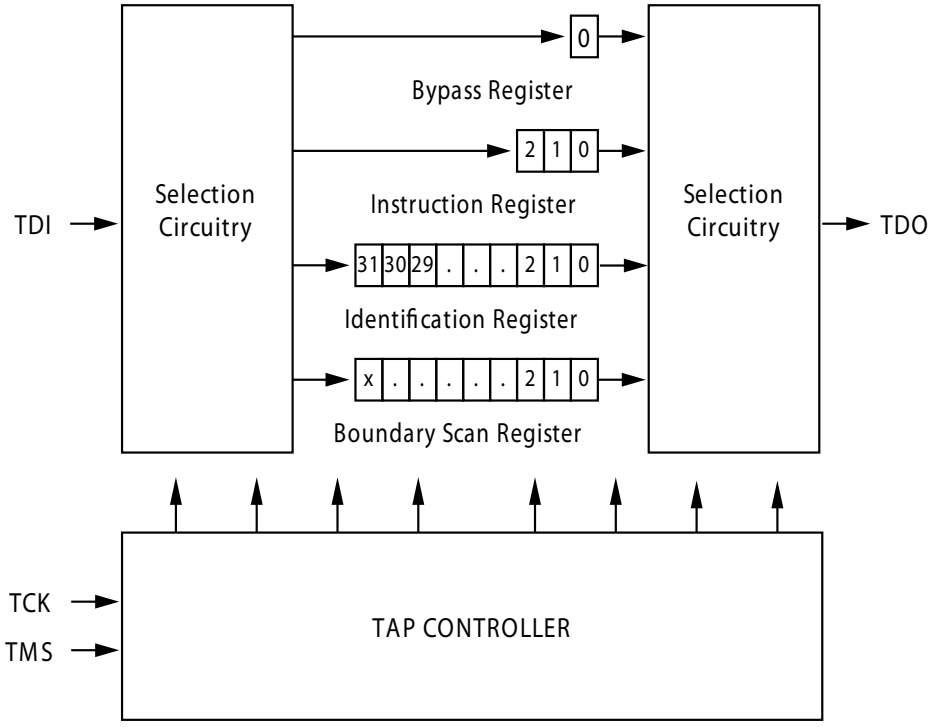

3.3 V TAP AC Test Conditions

Input pulse levels ..... V_{SS} to 3.3 V
Input rise and fall times ..... 1 ns
Input timing reference levels ..... 1.5 V
Output reference levels ..... 1.5 V
Test load termination supply voltage ..... 1.5 V

2.5 V TAP AC Test Conditions

Input pulse levels ..... V_{SS} to 2.5 V
Input rise and fall time ..... 1 ns
Input timing reference levels ..... 1.25 V
Output reference levels ..... 1.25 V
Test load termination supply voltage ..... 1.25 V

3.3 V TAP AC Output Load Equivalent

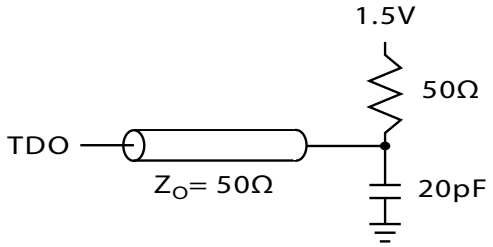

2.5 V TAP AC Output Load Equivalent

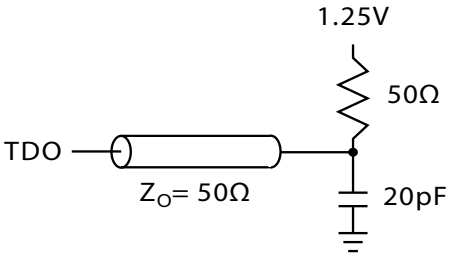

TAP DC Electrical Characteristics and Operating Conditions

(0 °C < T_A < +70 °C; V_{DD} = 3.135 to 3.6 V unless otherwise noted)

Parameter [8]	Description	Test Conditions		Min	Max	Unit
V_{OH1}	Output HIGH voltage	I_{OH} = –4.0 mA, V_{DDQ} = 3.3 V		2.4	–	V
		I_{OH} = –1.0 mA, V_{DDQ} = 2.5 V		2.0	–	V
V_{OH2}	Output HIGH voltage	I_{OH} = –100 µA	V_{DDQ} = 3.3 V	2.9	–	V
			V_{DDQ} = 2.5 V	2.1	–	V
V_{OL1}	Output LOW voltage	I_{OL} = 8.0 mA	V_{DDQ} = 3.3 V	–	0.4	V
		I_{OL} = 1.0 mA	V_{DDQ} = 2.5 V	–	0.4	V
V_{OL2}	Output LOW voltage	I_{OL} = 100 µA	V_{DDQ} = 3.3 V	–	0.2	V
			V_{DDQ} = 2.5 V	–	0.2	V
V_{IH}	Input HIGH voltage		V_{DDQ} = 3.3 V	2.0	V_{DD} + 0.3	V
			V_{DDQ} = 2.5 V	1.7	V_{DD} + 0.3	V
V_{IL}	Input LOW voltage		V_{DDQ} = 3.3 V	–0.3	0.8	V
			V_{DDQ} = 2.5 V	–0.3	0.7	V
I_X	Input load current	GND ≤ V_{IN} ≤ V_{DDQ}		–5	5	µA

Note
8. All voltages referenced to V_{SS} (GND).

TAP AC Switching Characteristics

Over the Operating Range

Parameter [9, 10]	Description	Min	Max	Unit
Clock				
t_{TCYC}	TCK clock cycle time	50	–	ns
t_{TF}	TCK clock frequency	–	20	MHz
t_{TH}	TCK clock HIGH time	20	–	ns
t_{TL}	TCK clock LOW time	20	–	ns
Output Times				
t_{TDOV}	TCK clock LOW to TDO valid	–	10	ns
t_{TDOX}	TCK clock LOW to TDO invalid	0	–	ns
Setup Times				
t_{TMSS}	TMS setup to TCK clock rise	5	–	ns
t_{TDIS}	TDI setup to TCK Clock rise	5	–	ns
t_{CS}	Capture setup to TCK rise	5	–	ns
Hold Times				
t_{TMSH}	TMS hold after TCK clock rise	5	–	ns
t_{TDIH}	TDI hold after clock rise	5	–	ns
t_{CH}	Capture hold after clock rise	5	–	ns

TAP Timing

Figure 3. TAP Timing

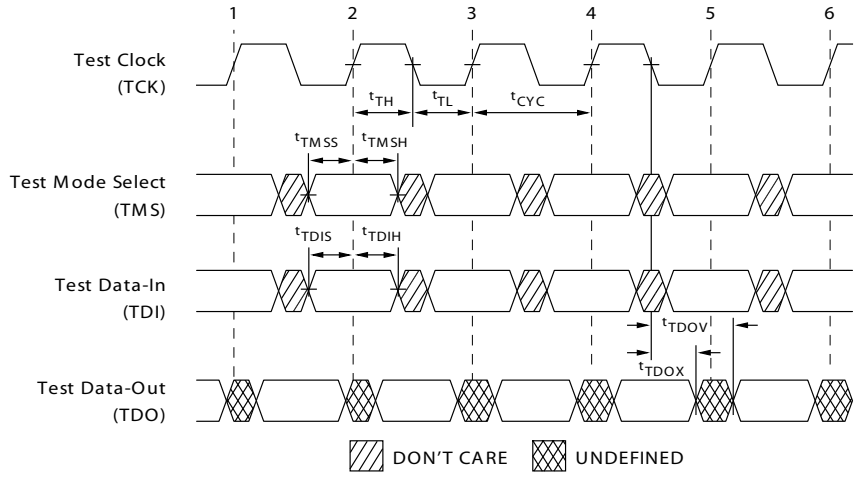

Notes
9. t_{CS} and t_{CH} refer to the setup and hold time requirements of latching data from the boundary scan register.
10. Test conditions are specified using the load in TAP AC Test Conditions. t_R/t_F = 1 ns.

Identification Register Definitions

Instruction Field	CY7C1480BV33 (2M × 36)	CY7C1482BV33 (4M × 18)	Description
Revision number (31:29)	000	000	Describes the version number
Device depth (28:24)	01011	01011	Reserved for internal use
Architecture/Memory type(23:18)	000000	000000	Defines memory type and architecture
Bus width/density(17:12)	100100	010100	Defines width and density
Cypress JEDEC ID Code (11:1)	00000110100	00000110100	Enables unique identification of SRAM vendor
ID register presence indicator (0)	1	1	Indicates the presence of an ID register

Scan Register Sizes

Register Name	Bit Size (× 36)	Bit Size (× 18)
Instruction	3	3
Bypass	1	1
ID	32	32
Boundary scan order – 165-ball FBGA	73	54

Identification Codes

Instruction	Code	Description
EXTEST	000	Captures the I/O ring contents.
IDCODE	001	Loads the ID register with the vendor ID code and places the register between TDI and TDO. This operation does not affect SRAM operations.
SAMPLE Z	010	Captures I/O ring contents. Places the boundary scan register between TDI and TDO. Forces all SRAM output drivers to a High Z state.
RESERVED	011	Do Not Use: This instruction is reserved for future use.
SAMPLE/PRELOAD	100	Captures I/O ring contents. Places the boundary scan register between TDI and TDO. Does not affect SRAM operation.
RESERVED	101	Do Not Use: This instruction is reserved for future use.
RESERVED	110	Do Not Use: This instruction is reserved for future use.
BYPASS	111	Places the bypass register between TDI and TDO. This operation does not affect SRAM operations.

Boundary Scan Exit Order

(2M × 36)

Bit #	165-ball ID
1	C1
2	D1
3	E1
4	D2
5	E2
6	F1
7	G1
8	F2
9	G2
10	J1
11	K1
12	L1
13	J2
14	M1
15	N1
16	K2
17	L2
18	M2
19	R1
20	R2

Bit #	165-ball ID
21	R3
22	P2
23	R4
24	P6
25	R6
26	N6
27	P11
28	R8
29	P3
30	P4
31	P8
32	P9
33	P10
34	R9
35	R10
36	R11
37	N11
38	M11
39	L11
40	M10

Bit #	165-ball ID
41	L10
42	K11
43	J11
44	K10
45	J10
46	H11
47	G11
48	F11
49	E11
50	D10
51	D11
52	C11
53	G10
54	F10
55	E10
56	A10
57	B10
58	A9
59	B9
60	A8

Bit #	165-ball ID
61	B8
62	A7
63	B7
64	B6
65	A6
66	B5
67	A5
68	A4
69	B4
70	B3
71	A3
72	A2
73	B2

Boundary Scan Exit Order

(4M × 18)

Bit #	165-ball ID
1	D2
2	E2
3	F2
4	G2
5	J1
6	K1
7	L1
8	M1
9	N1
10	R1
11	R2
12	R3
13	P2
14	R4
15	P6
16	R6
17	N6
18	P11

Bit #	165-ball ID
19	R8
20	P3
21	P4
22	P8
23	P9
24	P10
25	R9
26	R10
27	R11
28	M10
29	L10
30	K10
31	J10
32	H11
33	G11
34	F11
35	E11
36	D11

Bit #	165-ball ID
37	C11
38	A11
39	A10
40	B10
41	A9
42	B9
43	A8
44	B8
45	A7
46	B7
47	B6
48	A6
49	B5
50	A4
51	B3
52	A3
53	A2
54	B2

Maximum Ratings

Exceeding maximum ratings may shorten the useful life of the device. User guidelines are not tested.

Storage temperature ..... –65 °C to +150 °C

Ambient temperature with power applied ..... –55 °C to +125 °C

Supply voltage on V_{DD} relative to GND .....–0.3 V to +4.6 V

Supply voltage on V_{DDQ} relative to GND ..... –0.3 V to +V_{DD}

DC voltage applied to outputs in tri-state .....–0.5 V to V_{DDQ} + 0.5 V

DC input voltage ..... –0.5 V to V_{DD} + 0.5 V

Current into outputs (LOW) ..... 20 mA

Static discharge voltage (MIL-STD-883, Method 3015) ..... > 2001 V

Latch-up current ..... > 200 mA

Operating Range

Range	Ambient Temperature	V_{DD}	V_{DDQ}
Commercial	0 °C to +70 °C	3.3 V – 5% / + 10%	2.5 V – 5% to V_{DD}
Industrial	–40 °C to +85 °C		

Electrical Characteristics

Over the Operating Range

Parameter [11, 12]	Description	Test Conditions		Min	Max	Unit
V_{DD}	Power supply voltage			3.135	3.6	V
V_{DDQ}	I/O supply voltage	For 3.3 V I/O		3.135	V_{DD}	V
		For 2.5 V I/O		2.375	2.625	V
V_{OH}	Output HIGH voltage	For 3.3 V I/O, I_{OH} = –4.0 mA		2.4	–	V
		For 2.5 V I/O, I_{OH} = –1.0 mA		2.0	–	V
V_{OL}	Output LOW voltage	For 3.3 V I/O, I_{OL} = 8.0 mA		–	0.4	V
		For 2.5 V I/O, I_{OL} = 1.0 mA		–	0.4	V
V_{IH}	Input HIGH voltage [11]	For 3.3 V I/O		2.0	V_{DD} + 0.3	V
		For 2.5 V I/O		1.7	V_{DD} + 0.3	V
V_{IL}	Input LOW voltage [11]	For 3.3 V I/O		–0.3	0.8	V
		For 2.5 V I/O		–0.3	0.7	V
I_X	Input leakage current except ZZ and MODE	GND ≤ V_I ≤ V_{DDQ}		–5	5	µA
	Input current of MODE	Input = V_{SS}		–30	–	µA
		Input = V_{DD}		–	5	µA
	Input current of ZZ	Input = V_{SS}		–5	–	µA
		Input = V_{DD}		–	30	µA
I_{OZ}	Output leakage current	GND ≤ V_I ≤ V_{DDQ}, output disabled		–5	5	µA
I_{DD} [13]	V_{DD} operating supply current	V_{DD} = Max, I_{OUT} = 0 mA, f = f_{MAX} = 1/t_{CYC}	4.0 ns cycle, 250 MHz	–	500	mA
			5.0 ns cycle, 200 MHz	–	500	mA
			6.0 ns cycle, 167 MHz	–	450	mA
I_{SB1}	Automatic CE power-down current – TTL Inputs	V_{DD} = Max, device deselected, V_{IN} ≥ V_{IH} or V_{IN} ≤ V_{IL}, f = f_{MAX} = 1/t_{CYC}	4.0 ns cycle, 250 MHz	–	245	mA
			5.0 ns cycle, 200 MHz	–	245	mA
			6.0 ns cycle, 167 MHz	–	245	mA

Notes

11. Overshoot: $V_{IH(AC)}$ < V_{DD} + 1.5 V (Pulse width less than t_{CYC}/2). Undershoot: $V_{IL(AC)}$ > –2 V (Pulse width less than t_{CYC}/2).
12. Power-up: Assumes a linear ramp from 0V to $V_{DD(min)}$ within 200 ms. During this time V_{IH} < V_{DD} and V_{DDQ} ≤ V_{DD}.
13. The operation current is calculated with 50% read cycle and 50% write cycle.

Electrical Characteristics (continued)

Over the Operating Range

Parameter [11, 12]	Description	Test Conditions		Min	Max	Unit
I_{SB2}	Automatic CE power-down current – CMOS inputs	V_{DD} = Max, device deselected, $V_{IN} \le 0.3$ V or $V_{IN} \ge V_{DDQ} - 0.3$ V, f = 0	All speeds	–	120	mA
I_{SB3}	Automatic CE power-down current – CMOS inputs	V_{DD} = Max, device deselected, $V_{IN} \le 0.3$ V or $V_{IN} \ge V_{DDQ} - 0.3$ V, f = $f_{MAX} = 1/t_{CYC}$	4.0 ns cycle, 250 MHz	–	245	mA
			5.0 ns cycle, 200 MHz	–	245	mA
			6.0 ns cycle, 167 MHz	–	245	mA
I_{SB4}	Automatic CE power-down current – TTL inputs	V_{DD} = Max, device deselected, $V_{IN} \ge V_{IH}$ or $V_{IN} \le V_{IL}$, f = 0	All speeds	–	135	mA

Capacitance

Parameter [14]	Description	Test Conditions	100-pin TQFP Max	165-ball FBGA Max	Unit
$C_{ADDRESS}$	Address input capacitance	T_A = 25 °C, f = 1 MHz, V_{DD} = 3.3 V, V_{DDQ} = 2.5 V	6	6	pF
C_{DATA}	Data input capacitance		5	5	pF
C_{CTRL}	Control input capacitance		8	8	pF
C_{CLK}	Clock input capacitance		6	6	pF
$C_{I/O}$	I/O capacitance		5	5	pF

Thermal Resistance

Parameter [14]	Description	Test Conditions	100-pin TQFP Package	165-ball FBGA Package	Unit
θ_{JA}	Thermal resistance (junction to ambient)	Test conditions follow standard test methods and procedures for measuring thermal impedance, according to EIA/JESD51.	24.63	16.3	°C/W
θ_{JC}	Thermal resistance (junction to case)		2.28	2.1	°C/W

Note
14. Tested initially and after any design or process change that may affect these parameters.

AC Test Loads and Waveforms

Figure 4. AC Test Loads and Waveforms

3.3 V I/O Test Load

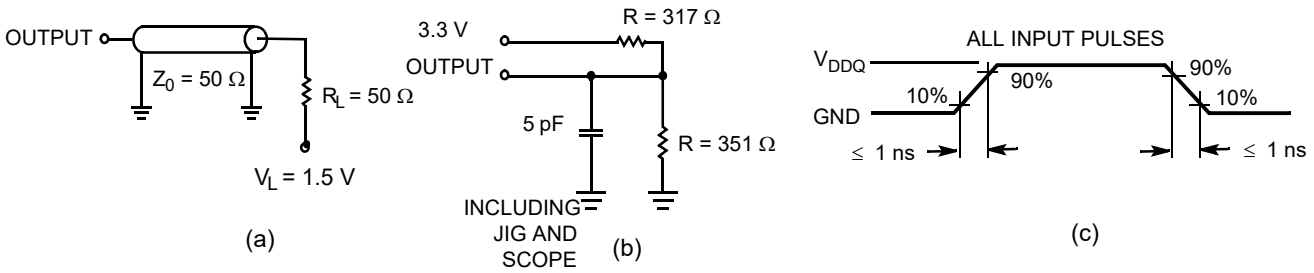

2.5 V I/O Test Load

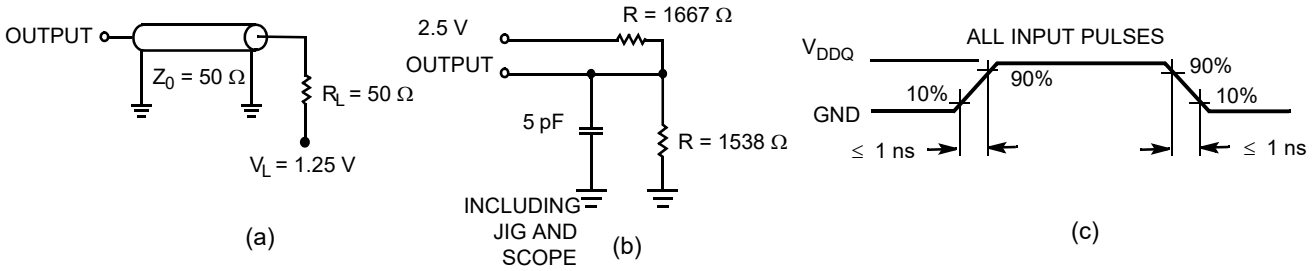

Switching Characteristics

Over the Operating Range

Parameter [15, 16]	Description	250 MHz		200 MHz		167 MHz		Unit
		Min	Max	Min	Max	Min	Max	
t_{POWER}	V_{DD}(typical) to the first access [17]	1	–	1	–	1	–	ms
Clock								
t_{CYC}	Clock cycle time	4.0	–	5.0	–	6.0	–	ns
t_{CH}	Clock HIGH	2.0	–	2.0	–	2.4	–	ns
t_{CL}	Clock LOW	2.0	–	2.0	–	2.4	–	ns
Output Times								
t_{CO}	Data output valid after CLK rise	–	3.0	–	3.0	–	3.4	ns
t_{DOH}	Data output hold after CLK rise	1.3	–	1.3	–	1.5	–	ns
t_{CLZ}	Clock to low Z [18, 19, 20]	1.3	–	1.3	–	1.5	–	ns
t_{CHZ}	Clock to high Z [18, 19, 20]	–	3.0	–	3.0	–	3.4	ns
t_{OEV}	$\overline{OE}$ LOW to output valid	–	3.0	–	3.0	–	3.4	ns
t_{OELZ}	$\overline{OE}$ LOW to output low Z [18, 19, 20]	0	–	0	–	0	–	ns
t_{OEHZ}	$\overline{OE}$ HIGH to output high Z [18, 19, 20]	–	3.0	–	3.0	–	3.4	ns
Setup Times								
t_{AS}	Address setup before CLK rise	1.4	–	1.4	–	1.5	–	ns
t_{ADS}	$\overline{ADSC}$, $\overline{ADSP}$ setup before CLK rise	1.4	–	1.4	–	1.5	–	ns
t_{ADVS}	$\overline{ADV}$ setup before CLK rise	1.4	–	1.4	–	1.5	–	ns
t_{WES}	$\overline{GW}$, $\overline{BWE}$, $\overline{BW_X}$ setup before CLK rise	1.4	–	1.4	–	1.5	–	ns
t_{DS}	Data input setup before CLK rise	1.4	–	1.4	–	1.5	–	ns
t_{CES}	Chip enable setup before CLK rise	1.4	–	1.4	–	1.5	–	ns
Hold Times								
t_{AH}	Address hold after CLK rise	0.4	–	0.4	–	0.5	–	ns
t_{ADH}	$\overline{ADSP}$, $\overline{ADSC}$ hold after CLK rise	0.4	–	0.4	–	0.5	–	ns
t_{ADVH}	$\overline{ADV}$ hold after CLK rise	0.4	–	0.4	–	0.5	–	ns
t_{WEH}	$\overline{GW}$, $\overline{BWE}$, $\overline{BW_X}$ hold after CLK rise	0.4	–	0.4	–	0.5	–	ns
t_{DH}	Data input hold after CLK rise	0.4	–	0.4	–	0.5	–	ns
t_{CEH}	Chip enable hold after CLK rise	0.4	–	0.4	–	0.5	–	ns

Notes

15. Timing reference level is 1.5 V when V_{DDQ} = 3.3 V and is 1.25 V when V_{DDQ} = 2.5 V.
16. Test conditions shown in (a) of Figure 4 on page 22 unless otherwise noted.
17. This part has an internal voltage regulator; t_{POWER} is the time that the power needs to be supplied above $V_{DD(minimum)}$ initially before a read or write operation can be initiated.
18. t_{CHZ}, t_{CLZ},t_{OELZ}, and t_{OEHZ} are specified with AC test conditions shown in part (b) of Figure 4 on page 22. Transition is measured ±200 mV from steady-state voltage.
19. At any supplied voltage and temperature, t_{OEHZ} is less than t_{OELZ} and t_{CHZ} is less than t_{CLZ} to eliminate bus contention between SRAMs when sharing the same data bus. These specifications do not imply a bus contention condition, but reflect parameters guaranteed over worst case user conditions. Device is designed to achieve high Z before low Z under the same system conditions.
20. This parameter is sampled and not 100% tested.

Switching Waveforms

Figure 3. Read Cycle Timing [21]

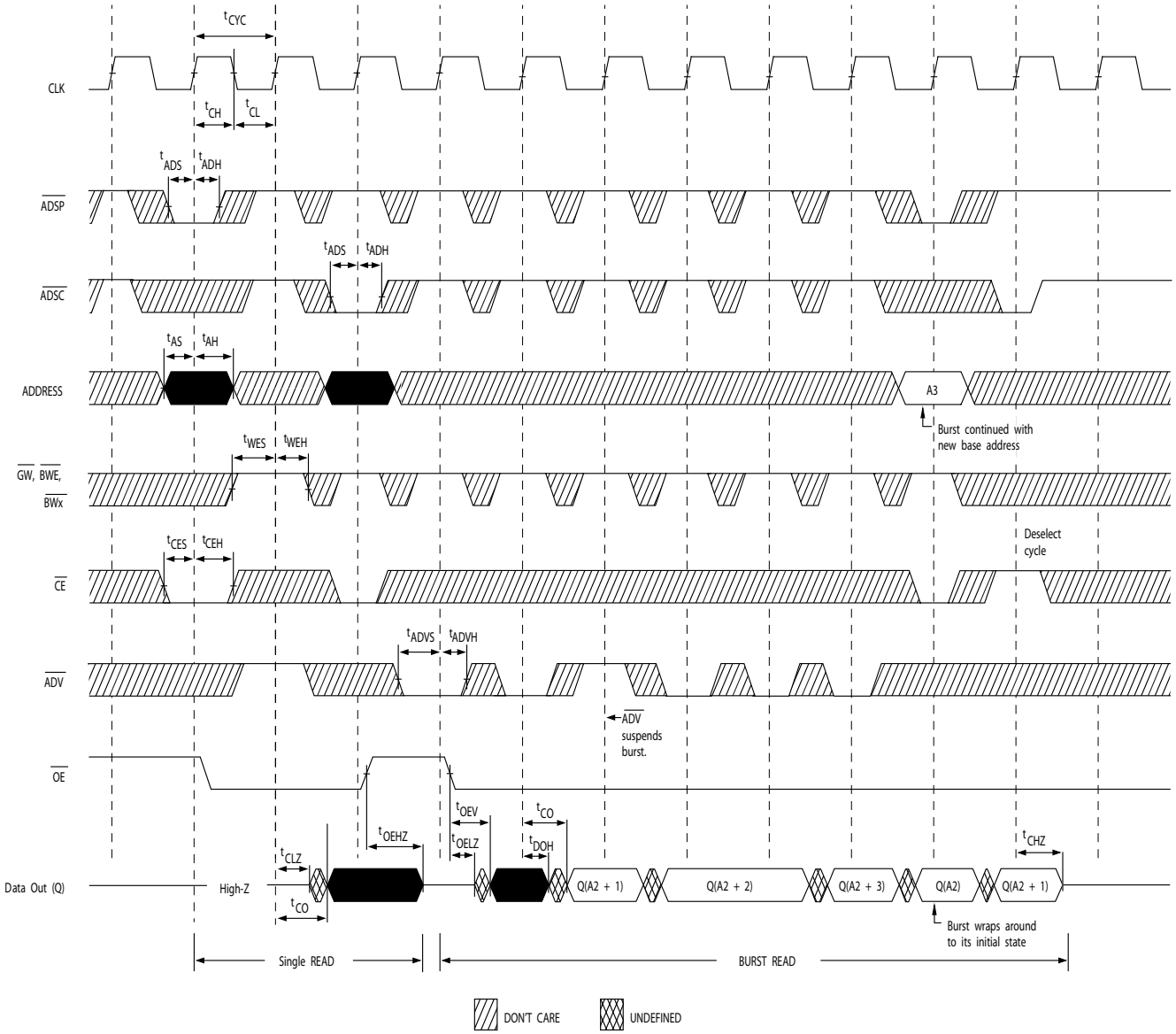

Note
21. On this diagram, when $\overline{CE}$ is LOW: $\overline{CE}_1$ is LOW, CE_2 is HIGH, and $\overline{CE}_3$ is LOW. When $\overline{CE}$ is HIGH: $\overline{CE}_1$ is HIGH, CE_2 is LOW, or $\overline{CE}_3$ is HIGH.

Switching Waveforms (continued)

Figure 4. Write Cycle Timing [22, 23]

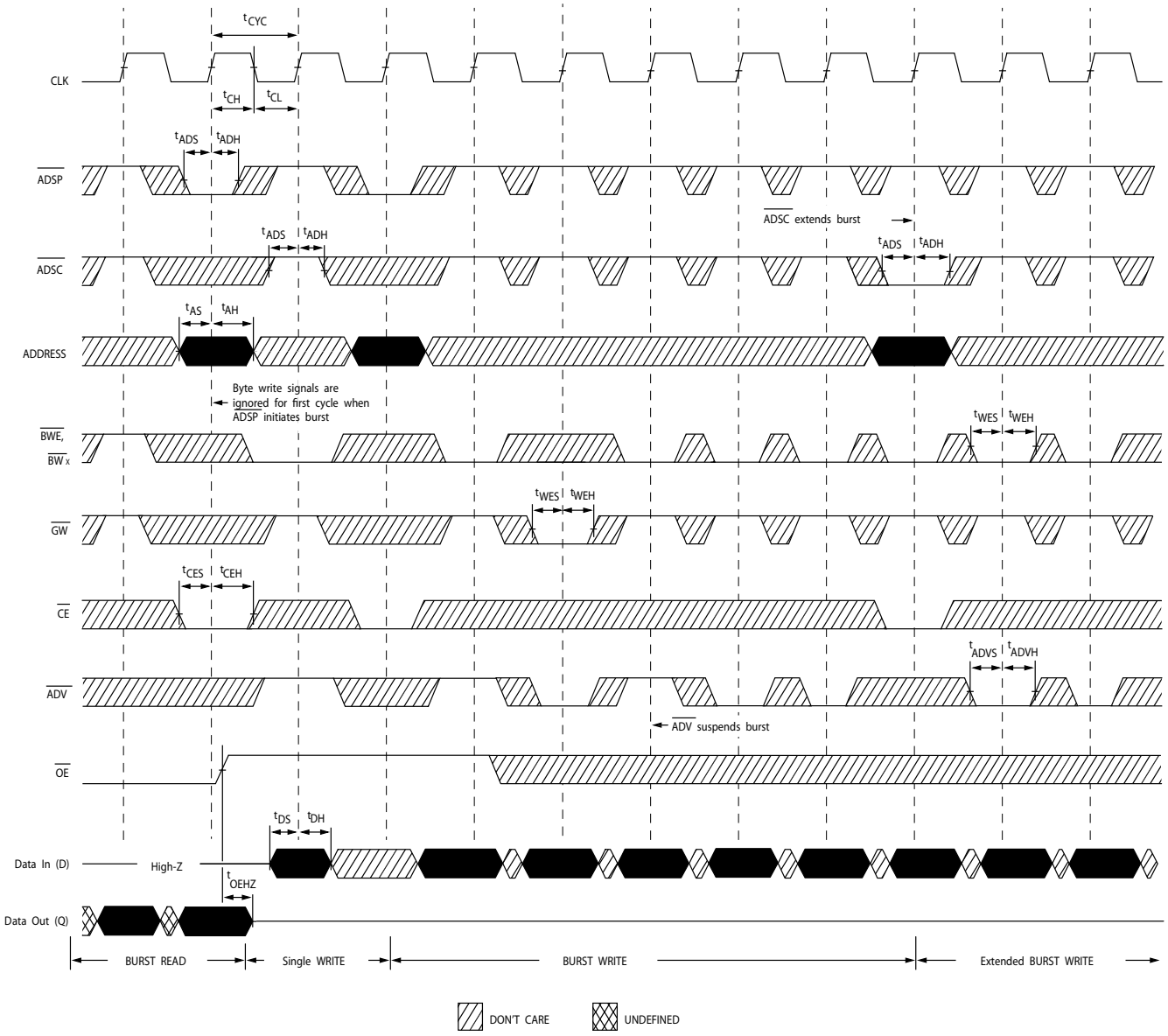

Notes
22. On this diagram, when $\overline{CE}$ is LOW: $\overline{CE}_1$ is LOW, CE_2 is HIGH, and $\overline{CE}_3$ is LOW. When $\overline{CE}$ is HIGH: $\overline{CE}_1$ is HIGH, CE_2 is LOW, or $\overline{CE}_3$ is HIGH.
23. Full width write can be initiated by either $\overline{GW}$ LOW; or by $\overline{GW}$ HIGH, $\overline{BWE}$ LOW, and $\overline{BW}_X$ LOW.

Switching Waveforms (continued)

Figure 5. Read/Write Cycle Timing [24, 25, 26]

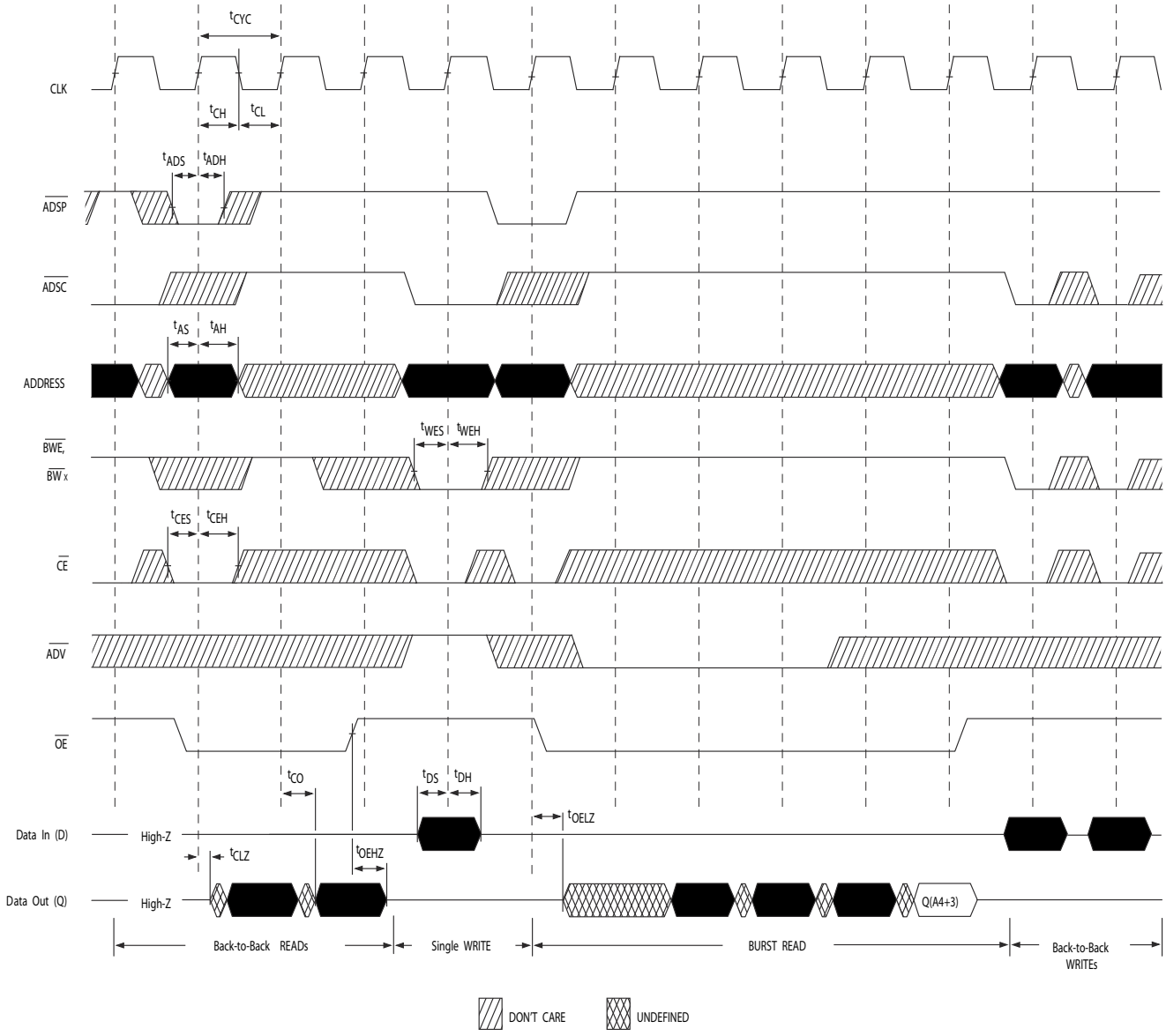

Notes
24. On this diagram, when $\overline{CE}$ is LOW: $\overline{CE}_1$ is LOW, CE_2 is HIGH, and $\overline{CE}_3$ is LOW. When $\overline{CE}$ is HIGH: $\overline{CE}_1$ is HIGH, CE_2 is LOW, or $\overline{CE}_3$ is HIGH.
25. The data bus (Q) remains in high Z following a write cycle, unless a new read access is initiated by $\overline{ADSP}$ or $\overline{ADSC}$.
26. $\overline{GW}$ is HIGH.

Switching Waveforms (continued)

Figure 6. ZZ Mode Timing [27, 28]

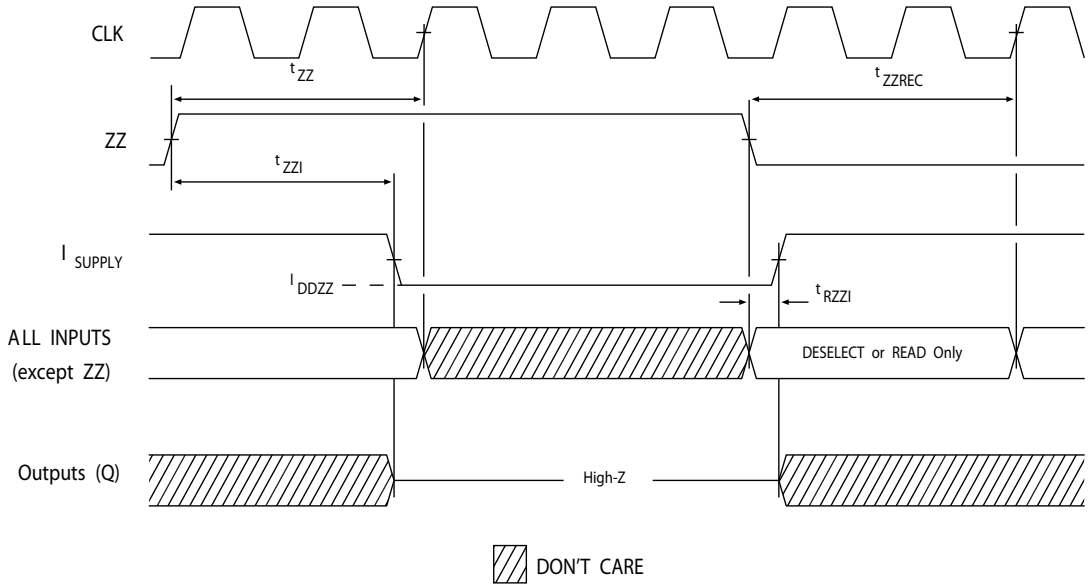

Notes
27. Device must be deselected when entering ZZ mode. See the section Truth Table on page 9 for all possible signal conditions to deselect the device.
28. DQs are in High Z when exiting ZZ sleep mode.

Ordering Information

Table 1 lists the key package features and ordering codes. The table contains only the parts that are currently available. If you do not see what you are looking for, contact your local sales representative. For more information, visit the Cypress website at www.cypress.com and refer to the product summary page at http://www.cypress.com/products.

Table 1. Key Features and Ordering Informations

Speed (MHz)	Ordering Code	Package Diagram	Part and Package Type	Operating Range
167	CY7C1480BV33-167BZXC	51-85165	165-ball FBGA (15 × 17 × 1.4 mm) Pb-free	Commercial
	CY7C1480BV33-167AXI	51-85050	100-pin TQFP (14 × 20 × 1.4 mm) Pb-free	Industrial
200	CY7C1480BV33-200AXC	51-85050	100-pin TQFP (14 × 20 × 1.4 mm) Pb-free	Commercial
	CY7C1482BV33-200BZI	51-85165	165-ball FBGA (15 × 17 × 1.4 mm)	Industrial
250	CY7C1480BV33-250BZXC	51-85165	165-ball FBGA (15 × 17 × 1.4 mm) Pb-free	Commercial
	CY7C1480BV33-250BZI	51-85165	165-ball FBGA (15 × 17 × 1.4 mm)	Industrial

Ordering Code Definitions

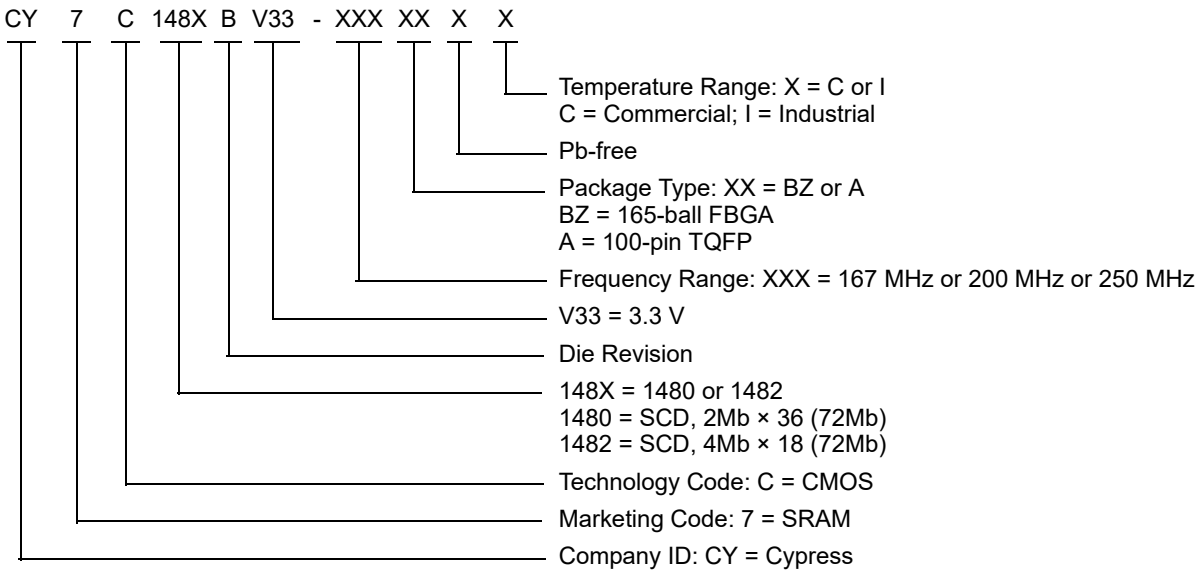

Package Diagrams

Figure 7. 100-pin TQFP (14 × 20 × 1.4 mm) A100RA Package Outline, 51-85050

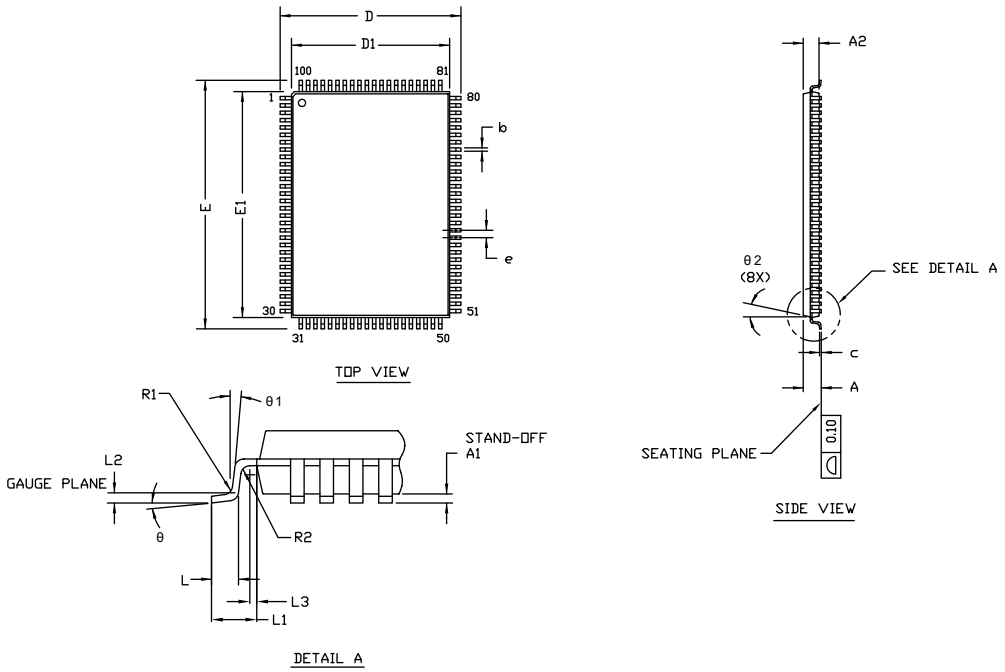

SYMBOL	DIMENSIONS		
	MIN.	NOM.	MAX.
A	—	—	1.60
A1	0.05	—	0.15
A2	1.35	1.40	1.45
D	15.80	16.00	16.20
D1	13.90	14.00	14.10
E	21.80	22.00	22.20
E1	19.90	20.00	20.10
R1	0.08	—	0.20
R2	0.08	—	0.20
θ	0°	—	7°
θ1	0°	—	—
θ2	11°	12°	13°
c	—	—	0.20
b	0.22	0.30	0.38
L	0.45	0.60	0.75
L1	1.00 REF		
L2	0.25 BSC		
L3	0.20	—	—
e	0.65 TYP		

NOTE:

1. ALL DIMENSIONS ARE IN MILLIMETERS.
2. BODY LENGTH DIMENSION DOES NOT INCLUDE MOLD PROTRUSION/END FLASH. MOLD PROTRUSION/END FLASH SHALL NOT EXCEED 0.0098 in (0.25 mm) PER SIDE. BODY LENGTH DIMENSIONS ARE MAX PLASTIC BODY SIZE INCLUDING MOLD MISMATCH.
3. JEDEC SPECIFICATION NO. REF: MS-026.

51-85050 *G

Package Diagrams (continued)

Figure 8. 165-ball FBGA ((15 × 17 × 1.4 mm) 0.45 Ball Diameter) Package Outline, 51-85165

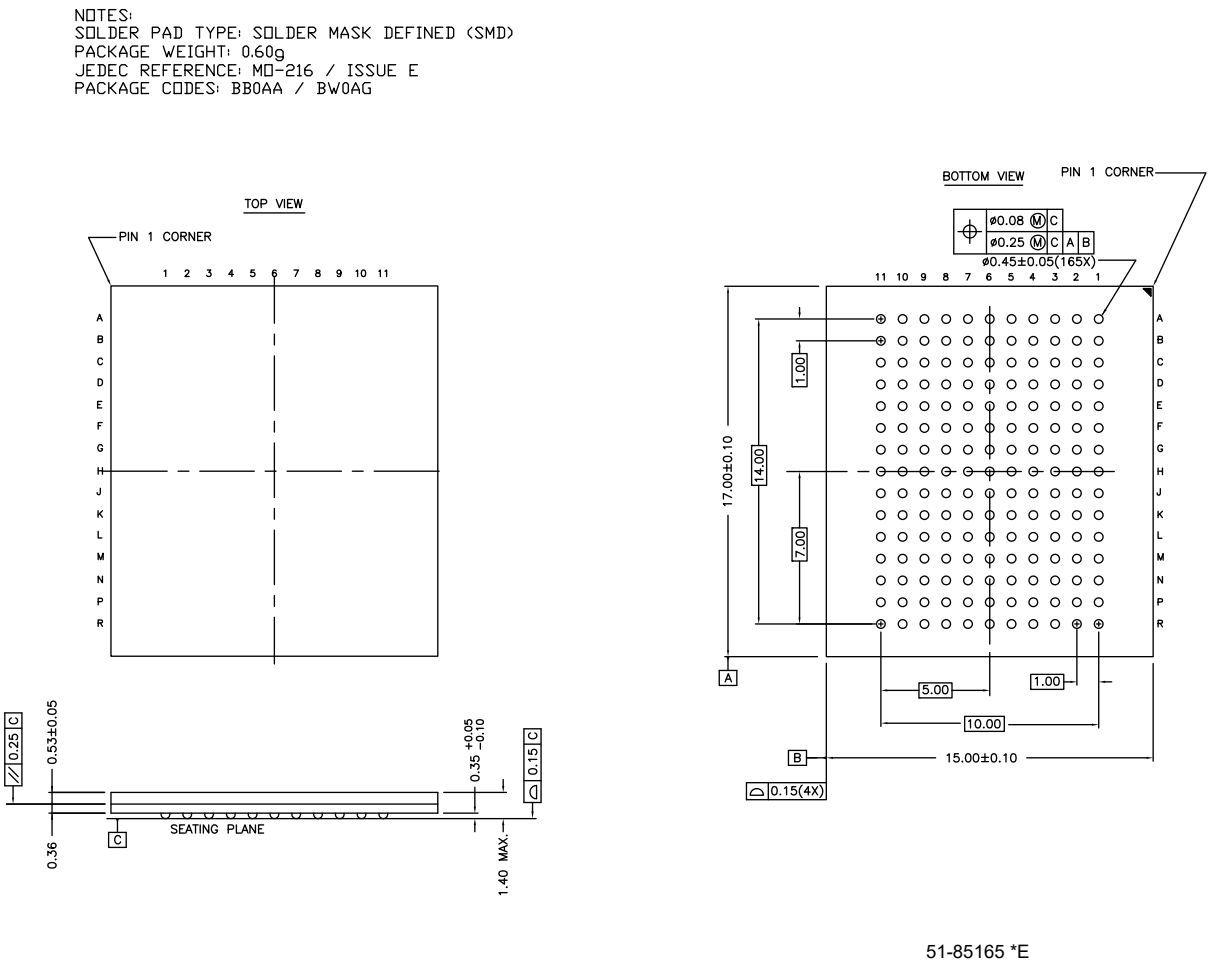

51-85165 *E

Acronyms

Acronym	Description
BGA	Ball Grid Array
$\overline{CE}$	Chip Enable
CMOS	Complementary Metal Oxide Semiconductor
EIA	Electronic Industries Alliance
FBGA	Fine-Pitch Ball Grid Array
I/O	Input/Output
JEDEC	Joint Electron Devices Engineering Council
JTAG	Joint Test Action Group
LSB	Least Significant Bit
MSB	Most Significant Bit
$\overline{OE}$	Output Enable
SRAM	Static Random Access Memory
TAP	Test Access Port
TCK	Test Clock
TDI	Test Data-In
TDO	Test Data-Out
TMS	Test Mode Select
TQFP	Thin Quad Flat Pack
TTL	Transistor-Transistor Logic

Document Conventions

Units of Measure

Symbol	Unit of Measure
°C	degree Celsius
MHz	megahertz
µA	microampere
mA	milliampere
mm	millimeter
ms	millisecond
mV	millivolt
ns	nanosecond
Ω	ohm
%	percent
pF	picofarad
V	volt
W	watt

Document History Page

Document Title: CY7C1480BV33/CY7C1482BV33, 72-Mbit (2M × 36/4M × 18) Pipelined Sync SRAM Document Number: 001-15145				
Revision	**ECN**	**Orig. of Change**	**Submission Date**	**Description of Change**
**	1024385	VKN / KKVTMP	05/02/2007	New data sheet.
*A	2183566	VKN / PYRS	03/06/2008	Changed status from Preliminary to Final. Updated Electrical Characteristics (Added Note 13 and referred the same note in I_{DD} parameter).
*B	2898663	NJY	03/24/2010	Updated Ordering Information (Updated part numbers). Updated Package Diagrams: spec 51-85050 – Changed revision from *B to *C. spec 51-85165 – Changed revision from *A to *B. spec 51-85167 – Changed revision from ** to *A.
*C	2905654	VKN	06/04/2010	Updated Ordering Information (Updated part numbers).
*D	3069168	NJY	10/23/2010	Updated Ordering Information: Updated part numbers. Added Ordering Code Definitions.
*E	3207715	NJY	03/28/2011	Updated Ordering Information: Updated part numbers. Updated Package Diagrams: spec 51-85050 – Changed revision from *C to *D. Updated to new template.
*F	3298193	OSN	06/30/2011	Updated Package Diagrams: spec 51-85165 – Changed revision from *B to *C. Added Acronyms and Units of Measure. Updated to new template. Completing Sunset Review.
*G	3423864	PRIT	10/27/2011	Updated Ordering Information: Updated part numbers. Updated Package Diagrams: spec 51-85165 – Changed revision from *C to *D. spec 51-85167 – Changed revision from *A to *B.
*H	3628180	PRIT	05/25/2012	Updated Features (Removed 100-pin TQFP package related information (Corresponding to CY7C1482BV33), removed 209-ball FBGA package related information). Updated Functional Description (Removed CY7C1486BV33 related information). Removed Logic Block Diagram – CY7C1486BV33. Updated Pin Configurations (Removed 100-pin TQFP package related information (Corresponding to CY7C1482BV33), removed 209-ball FBGA package related information). Updated Pin Definitions. Updated Functional Overview (Removed CY7C1486BV33 related information). Updated Truth Table (Removed CY7C1486BV33 related information). Removed Truth Table for Read/Write (Corresponding to CY7C1486BV33). Updated IEEE 1149.1 Serial Boundary Scan (JTAG) (Removed CY7C1486BV33 related information). Updated Identification Register Definitions (Removed CY7C1486BV33 related information). Updated Scan Register Sizes (Removed “Bit Size (× 72)” column). Removed Boundary Scan Exit Order (Corresponding to CY7C1486BV33).

Document History Page (continued)

Document Title: CY7C1480BV33/CY7C1482BV33, 72-Mbit (2M × 36/4M × 18) Pipelined Sync SRAM Document Number: 001-15145				
Revision	**ECN**	**Orig. of Change**	**Submission Date**	**Description of Change**
*H (cont.)	3628180	PRIT	05/25/2012	Updated Capacitance (Removed 209-ball FBGA package related information). Updated Thermal Resistance (Removed 209-ball FBGA package related information). Updated Package Diagrams: Removed spec 51-85167 *B. Completing Sunset Review.
*I	4488887	PRIT	08/30/2014	Updated Package Diagrams: spec 51-85050 – Changed revision from *D to *E. Updated to new template.
*J	4569232	PRIT	11/14/2014	Updated Functional Description: Added “For a complete list of related documentation, click here.” at the end.
*K	4811137	PRIT	06/25/2015	Updated Package Diagrams: spec 51-85165 – Changed revision from *D to *E. Updated to new template. Completing Sunset Review.
*L	6072329	CNX	02/15/2018	Updated Package Diagrams: spec 51-85050 – Changed revision from *E to *G. Updated to new template.

Sales, Solutions, and Legal Information

Worldwide Sales and Design Support

Cypress maintains a worldwide network of offices, solution centers, manufacturer's representatives, and distributors. To find the office closest to you, visit us at Cypress Locations.

Products

Arm® Cortex® Microcontrollers	cypress.com/arm
Automotive	cypress.com/automotive
Clocks & Buffers	cypress.com/clocks
Interface	cypress.com/interface
Internet of Things	cypress.com/iot
Memory	cypress.com/memory
Microcontrollers	cypress.com/mcu
PSoC	cypress.com/psoc
Power Management ICs	cypress.com/pmic
Touch Sensing	cypress.com/touch
USB Controllers	cypress.com/usb
Wireless Connectivity	cypress.com/wireless

PSoC® Solutions

PSoC 1 | PSoC 3 | PSoC 4 | PSoC 5LP | PSoC 6 MCU

Cypress Developer Community

Community | Projects | Video | Blogs | Training | Components

Technical Support

cypress.com/support

© Cypress Semiconductor Corporation, 2007-2018. This document is the property of Cypress Semiconductor Corporation and its subsidiaries, including Spansion LLC ("Cypress"). This document, including any software or firmware included or referenced in this document ("Software"), is owned by Cypress under the intellectual property laws and treaties of the United States and other countries worldwide. Cypress reserves all rights under such laws and treaties and does not, except as specifically stated in this paragraph, grant any license under its patents, copyrights, trademarks, or other intellectual property rights. If the Software is not accompanied by a license agreement and you do not otherwise have a written agreement with Cypress governing the use of the Software, then Cypress hereby grants you a personal, non-exclusive, nontransferable license (without the right to sublicense) (1) under its copyright rights in the Software (a) for Software provided in source code form, to modify and reproduce the Software solely for use with Cypress hardware products, only internally within your organization, and (b) to distribute the Software in binary code form externally to end users (either directly or indirectly through resellers and distributors), solely for use on Cypress hardware product units, and (2) under those claims of Cypress's patents that are infringed by the Software (as provided by Cypress, unmodified) to make, use, distribute, and import the Software solely for use with Cypress hardware products. Any other use, reproduction, modification, translation, or compilation of the Software is prohibited.

TO THE EXTENT PERMITTED BY APPLICABLE LAW, CYPRESS MAKES NO WARRANTY OF ANY KIND, EXPRESS OR IMPLIED, WITH REGARD TO THIS DOCUMENT OR ANY SOFTWARE OR ACCOMPANYING HARDWARE, INCLUDING, BUT NOT LIMITED TO, THE IMPLIED WARRANTIES OF MERCHANTABILITY AND FITNESS FOR A PARTICULAR PURPOSE. To the extent permitted by applicable law, Cypress reserves the right to make changes to this document without further notice. Cypress does not assume any liability arising out of the application or use of any product or circuit described in this document. Any information provided in this document, including any sample design information or programming code, is provided only for reference purposes. It is the responsibility of the user of this document to properly design, program, and test the functionality and safety of any application made of this information and any resulting product. Cypress products are not designed, intended, or authorized for use as critical components in systems designed or intended for the operation of weapons, weapons systems, nuclear installations, life-support devices or systems, other medical devices or systems (including resuscitation equipment and surgical implants), pollution control or hazardous substances management, or other uses where the failure of the device or system could cause personal injury, death, or property damage ("Unintended Uses"). A critical component is any component of a device or system whose failure to perform can be reasonably expected to cause the failure of the device or system, or to affect its safety or effectiveness. Cypress is not liable, in whole or in part, and you shall and hereby do release Cypress from any claim, damage, or other liability arising from or related to all Unintended Uses of Cypress products. You shall indemnify and hold Cypress harmless from and against all claims, costs, damages, and other liabilities, including claims for personal injury or death, arising from or related to any Unintended Uses of Cypress products.

Cypress, the Cypress logo, Spansion, the Spansion logo, and combinations thereof, WICED, PSoC, CapSense, EZ-USB, F-RAM, and Traveo are trademarks or registered trademarks of Cypress in the United States and other countries. For a more complete list of Cypress trademarks, visit cypress.com. Other names and brands may be claimed as property of their respective owners.

i486 is a trademark and Intel and Pentium are registered trademarks of Intel Corporation.