# CY7C68300C, CY7C68301C
# CY7C68320C, CY7C68321C

# EZ-USB AT2LP™ USB 2.0 to ATA/ATAPI Bridge

## Features

- Fixed Function Mass Storage Device—Requires no Firmware
- Two Power Modes: Self Powered and USB Bus Powered to enable Bus Powered CF Readers and Truly Portable USB Hard Drives
- Certified Compliant for USB 2.0 (TID# 40490119), the USB Mass Storage Class, and the USB Mass Storage Class Bulk-Only Transport (BOT) Specification
- Operates at High Speed (480 Mbps) or Full Speed (12 Mbps) USB
- Complies with ATA/ATAPI-6 Specification
- Supports 48-bit Addressing for Large Hard Drives
- Supports ATA Security Features
- Supports any ATA Command with the ATACB Function
- Supports Mode Page 5 for BIOS Boot Support
- Supports ATAPI Serial Number VPD Page Retrieval for Digital Rights Management (DRM) Compatibility
- Supports PIO Modes 0, 3, and 4, Multiword DMA Mode 2, and UDMA Modes 2, 3, and 4
- Uses one small External Serial EEPROM for Storage of USB Descriptors and Device Configuration Data
- ATA Interface IRQ Signal Support
- Supports one or two ATA/ATAPI Devices
- Supports Compact Flash and one ATA/ATAPI Device
- Supports Board-level Manufacturing Test using the USB I/F
- Can Place the ATA Interface in High Impedance (Hi-Z) to enable Sharing of the ATA Bus with another Controller such as an IEEE-1394 to ATA Bridge Chip or MP3 Decoder)
- Low Power 3.3V Operation
- Fully Compatible with Native USB Mass Storage Class Drivers
- Cypress Mass Storage Class Drivers available for Windows (98SE, ME, 2000, XP) and Mac OS X operating systems

### Features (CY7C68320C/CY7C68321C only)

- Supports HID Interface or Custom GPIOs to enable features such as Single Button Backup, Power Off, LED-based Notification, and so on
- 56-Pin QFN and 100-Pin TQFP Pb-free Packages
- CY7C68321C is Ideal for Battery Powered Designs
- CY7C68320C is Ideal for Self and Bus Powered Designs

### Features (CY7C68300C/CY7C68301C only)

- Pin Compatible with CY7C68300A (using Backward Compatibility Mode)
- 56-Pin SSOP and 56-Pin QFN Pb-free Packages
- CY7C68301C is Ideal for Battery Powered Designs
- CY7C68300C is Ideal for Self and Bus Powered Designs

## Logic Block Diagram

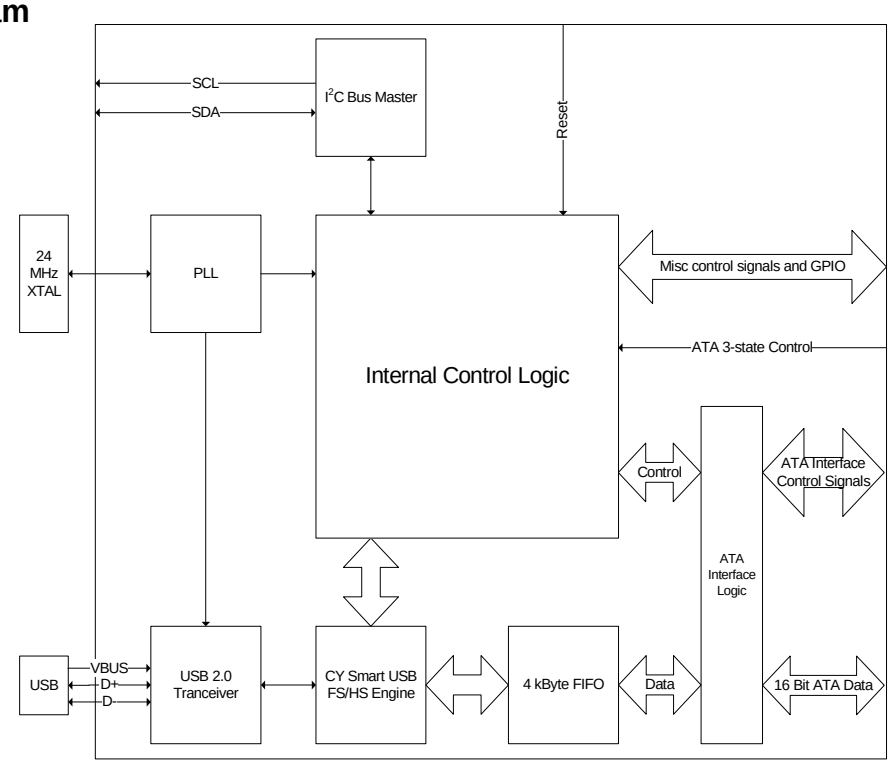


## Applications

The CY7C68300C/301C and CY7C68320C/321A implement a USB 2.0 bridge for all ATA/ATAPI-6 compliant mass storage devices, such as the following:

- Hard drives
- CD-ROM, CD-R/W
- DVD-ROM, DVD-RAM, DVD±R/W
- MP3 players
- Personal media players
- CompactFlash
- Microdrives
- Tape drives
- Personal video recorders

The CY7C68300C/301C and CY7C68320C/321A support one or two devices in the following configurations:

- ATA/ATAPI master only
- ATA/ATAPI slave only
- ATA/ATAPI master and ATA/ATAPI slave
- CompactFlash only
- ATA/ATAPI slave and CompactFlash or other removable IDE master

### Additional Resources

- *CY4615C EZ-USB AT2LP Reference Design Kit*
- *USB Specification* version 2.0
- *ATA Specification* T13/1410D Rev 3B
- USB *Mass Storage Class Bulk Only Transport Specification*, http://www.usb.org/developers/devclass_docs/usbmassbulk_10.pdf

## Introduction

The EZ-USB AT2LP™ (CY7C68300C/CY7C68301C and CY7C68320C/CY7C68321C) implements a fixed-function bridge between one USB port and one or two ATA- or ATAPI-based mass storage device ports. This bridge adheres to the Mass Storage Class Bulk-Only Transport Specification (BOT) and is intended for bus and self powered devices.

The AT2LP is the latest addition to the Cypress USB mass storage portfolio, and is an ideal cost- and power-reduction path for designs that previously used Cypress's ISD-300A1, ISD-300LP, or EZ-USB AT2.

Specifically, the CY7C68300C/CY7C68301C includes a mode that makes it pin-for-pin compatible with the EZ-USB AT2 (CY7C68300A).

The USB port of the CY7C68300C/301C and CY7C68320C/321A (AT2LP) are connected to a host computer directly or with the downstream port of a USB hub. Software on the USB host system issues commands and sends data to the AT2LP and receives status and data from the AT2LP using standard USB protocol.



[+] Feedback

The ATA/ATAPI port of the AT2LP is connected to one or two mass storage devices. A 4 KB buffer maximizes ATA/ATAPI data transfer rates by minimizing losses due to device seek times. The ATA interface supports ATA PIO modes 0, 3, and 4, multiword DMA mode 2, and Ultra DMA modes 2, 3, and 4.

The device initialization process is configurable, enabling the AT2LP to initialize ATA/ATAPI devices without software intervention.

## CY7C68300A Compatibility

As mentioned in the previous section, the CY7C68300C/301C contains a backward compatibility mode that enables it to be used in existing EZ-USB AT2 (CY7C68300A) designs. The backward compatibility mode is enabled by programming the EEPROM with the CY7C68300A signature.

During startup, the AT2LP checks the $I^2C$™ bus for an EEPROM with a valid signature in the first two bytes. If the signature is 0x4D4D, the AT2LP configures itself for pin-to-pin compatibility with the AT2 and begins normal mass storage operation. If the signature is 0x534B, the AT2LP configures itself with the AT2LP pinout and begins normal mass storage operation.

Refer to the logic flow in Figure 1 for more information on the pinout selection process.

Most designs that use the AT2 can migrate to the AT2LP with no changes to either the board layout or EEPROM data. Cypress has published an application note focused on migrating from the AT2 to the AT2LP to help expedite the process. It can be downloaded from the Cypress website (http://www.cypress.com) or obtained through a Cypress representative.

**Figure 1. Simplified Pinout Selection Flowchart**

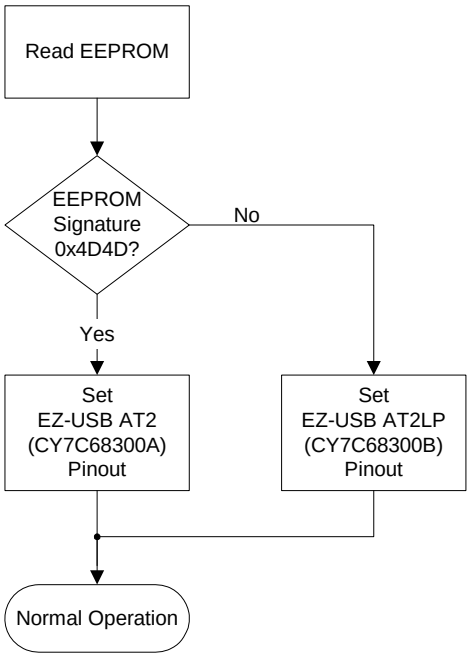




[+] Feedback

## Pin Diagrams

The AT2LP is available in different package types to meet a variety of design needs. The CY7C68320C/321C is available in 56-pin QFN and 100-pin TQFP packages to provide the greatest flexibility for new designs. The CY7C68300C/301C is available in 56-pin SSOP and QFN package types to ensure backward compatibility with CY7C68300A designs.

**Figure 2. 56-Pin SSOP Pinout (CY7C68300C/CY7C68301C only)**

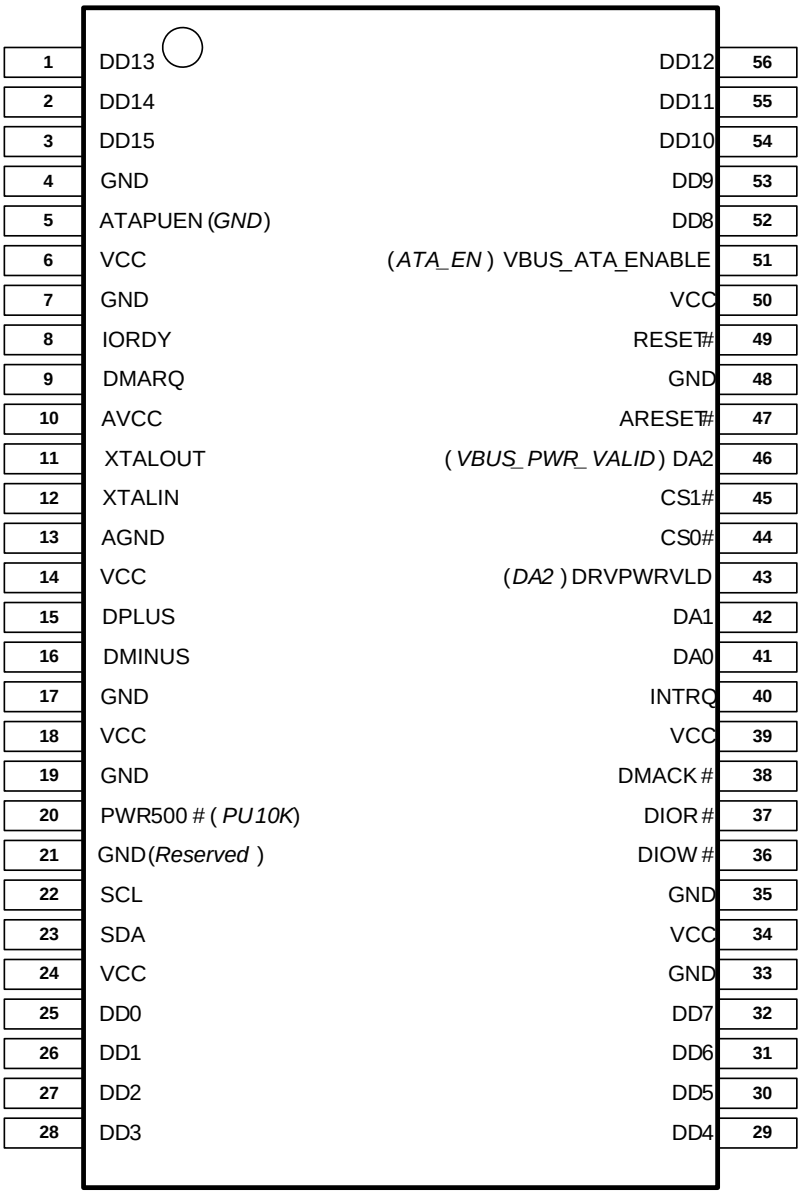


**NOTE: Labels in italics denote pin functionality during CY7C68300A compatibility mode.**



[+] Feedback

**Figure 3. 56-Pin QFN Pinout (CY7C68300C/CY7C68301C)**

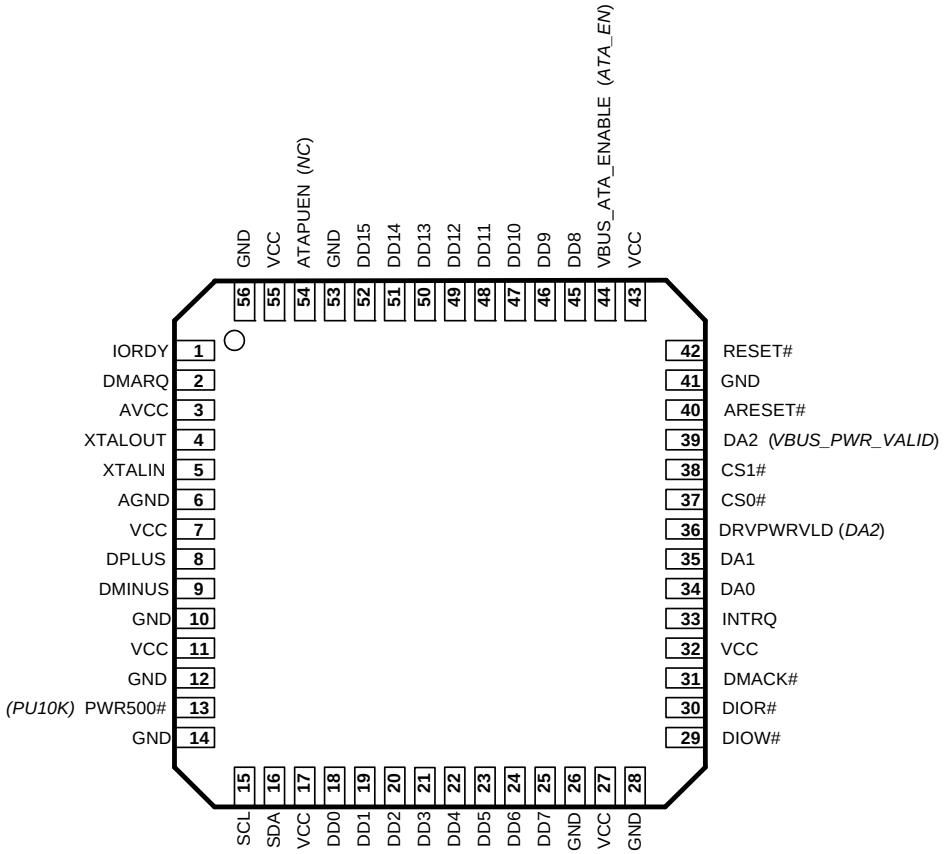




[+] Feedback

**Figure 4. 56-Pin SSOP Pinout (CY7C68320C/CY7C68321C)**

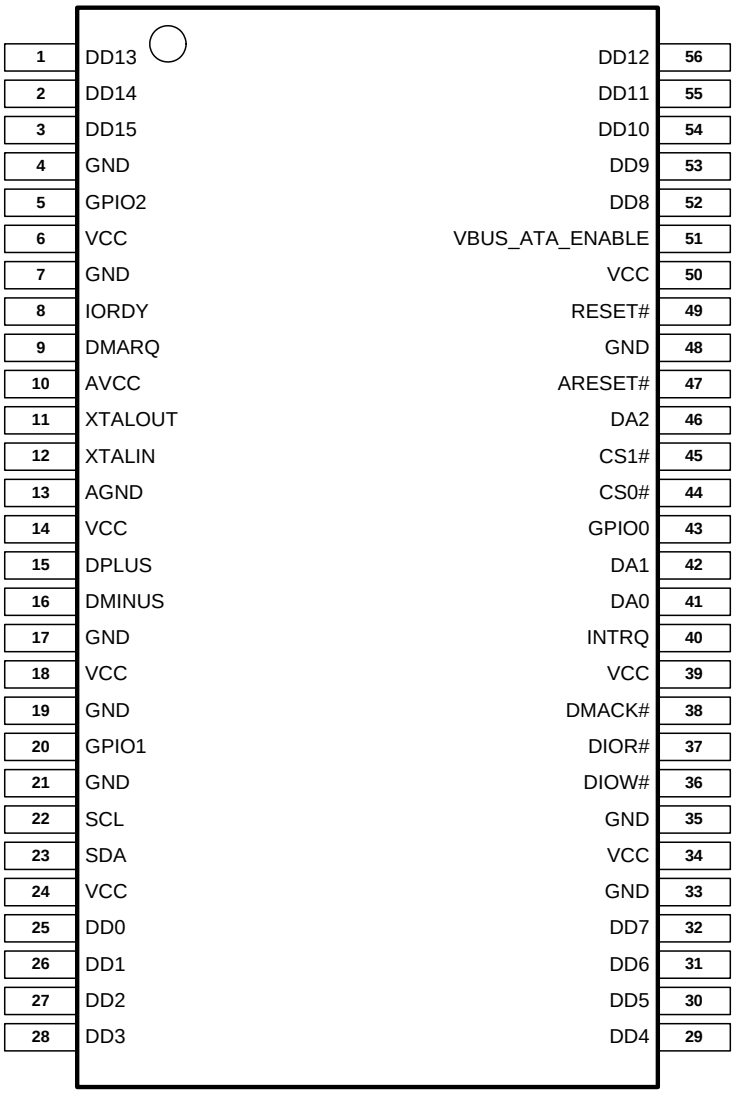




[+] Feedback

**Figure 5. 56-Pin QFN Pinout (CY7C68320C/CY7C68321C)**

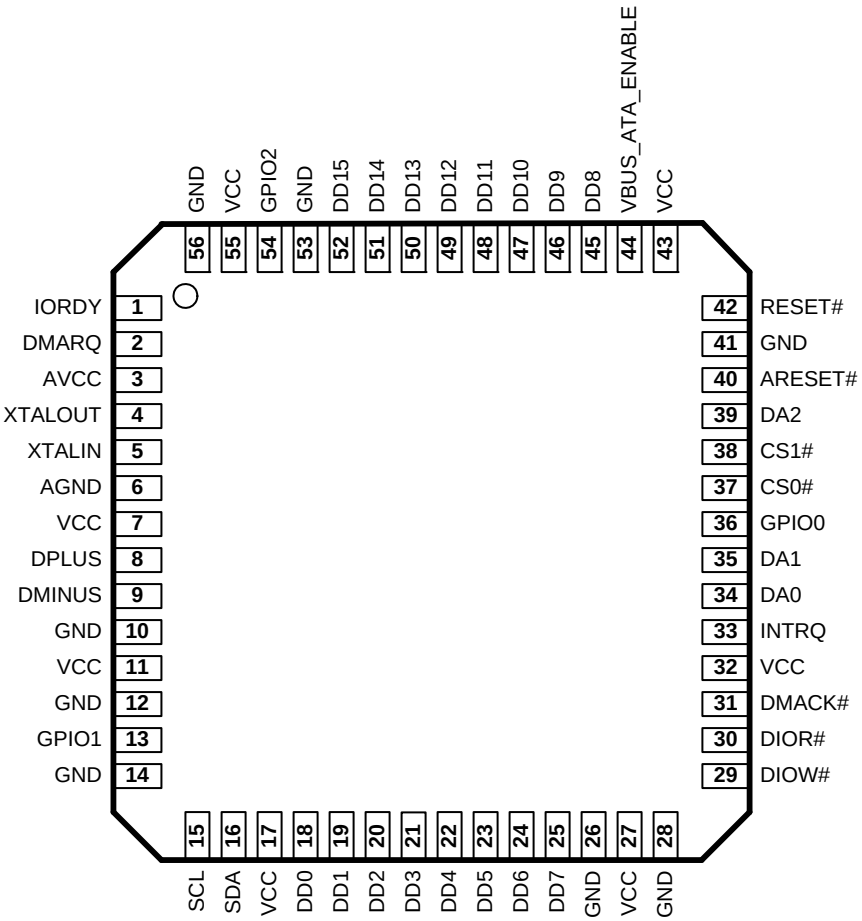




[+] Feedback

**Figure 6. 100-Pin TQFP Pinout (CY7C68320C/CY7C68321C only)**

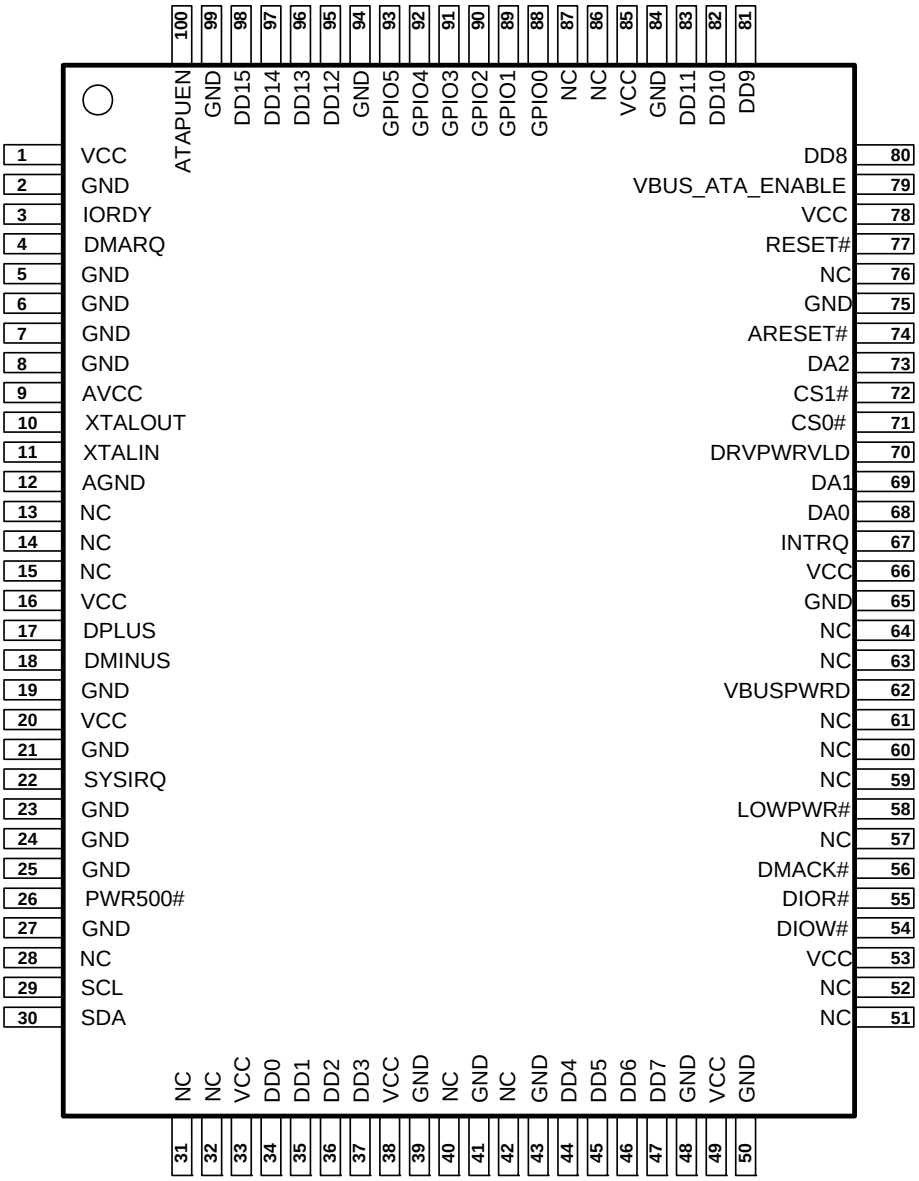




[+] Feedback

## Pin Descriptions

The following table lists the pinouts for the 56-pin SSOP, 56-pin QFN, and 100-pin TQFP package options for the AT2LP. Refer to the "Pin Diagrams" on page 4 for differences between the 68300C/01C and 68320C/321C pinouts for the 56-pin packages. For information on the CY7C68300A pinout, refer to the CY7C68300A data sheet that is found in the 'EZ-USB AT2' folder of the *CY4615C reference design kit CD*.

**Table 1. AT2LP Pin Descriptions**
**Note: (Italic pin names denote pin functionality during CY7C68300A compatibility mode)**

| 100 TQFP | 56 QFN | 56 SSOP | Pin Name | Pin Type | Default State at Startup | Pin Description |
|---|---|---|---|---|---|---|
| 1 | 55 | 6 | $V_{CC}$ | PWR | | **$V_{CC}$**. Connect to 3.3V power source. |
| 2 | 56 | 7 | GND | GND | | **Ground**. |
| 3 | 1 | 8 | IORDY | I[1] | Input | **ATA control**. Apply a 1k pull up to 3.3V. |
| 4 | 2 | 9 | DMARQ | I[1] | Input | **ATA control**. |
| 5<br>6<br>7<br>8 | N/A | N/A | GND | | | **Ground**. |
| 9 | 3 | 10 | $AV_{CC}$ | PWR | | **Analog $V_{CC}$**. Connect to $V_{CC}$ through the shortest path possible. |
| 10 | 4 | 11 | XTALOUT | Xtal | Xtal | **24 MHz crystal output.** (See "XTALIN, XTALOUT" on page 12). |
| 11 | 5 | 12 | XTALIN | Xtal | Xtal | **24 MHz crystal input.** (See "XTALIN, XTALOUT" on page 12). |
| 12 | 6 | 13 | AGND | GND | | **Analog ground**. Connect to ground with as short a path as possible. |
| 13<br>14<br>15 | N/A | N/A | NC | | | **No connect**. |
| 16 | 7 | 14 | $V_{CC}$ | PWR | | **$V_{CC}$**. Connect to 3.3V power source. |
| 17 | 8 | 15 | DPLUS | I/O | Hi-Z | **USB D+ signal** (See "DPLUS, DMINUS" on page 12). |
| 18 | 9 | 16 | DMINUS | I/O | Hi-Z | **USB D–signal** (See "DPLUS, DMINUS" on page 12). |
| 19 | 10 | 17 | GND | GND | | **Ground**. |
| 20 | 11 | 18 | $V_{CC}$ | PWR | | **$V_{CC}$**. Connect to 3.3V power source. |
| 21 | 12 | 19 | GND | GND | | **Ground**. |
| 22 | N/A | N/A | SYSIRQ | I | Input | **USB interrupt request.** (See "SYSIRQ" **on page 13**). Active HIGH. Connect to GND if functionality is not used. |
| 23<br>24<br>25 | N/A | N/A | GND | GND | | **Ground**. |
| 26[3] | 13[3] | 20 | PWR500#[2]<br>(*PU 10K*) | O | | **bMaxPower request granted indicator.** (See "PWR500#" on page 14). Active LOW.<br>N/A for CY7C68320C/CY7C68321C 56-pin packages. |
| 27 | 14 | 21 | GND (*RESERVED*) | | | **Reserved**. Tie to GND. |

**Notes**
1. If byte 8, bit 4 of the EEPROM is set to '0', the ATA interface pins are only active when VBUS_ATA_EN is asserted. See "VBUS_ATA_ENABLE" on page 14.
2. A '#' sign after the pin name indicates that it is active LOW.
3. The General Purpose inputs can be enabled on ATAPUEN, PWR500#, and DRVPWRVLD via EEPROM byte 8, bit 7 on CY7C68320C/CY7C68321C.



[+] Feedback

**Table 1. AT2LP Pin Descriptions**
**Note: (Italic pin names denote pin functionality during CY7C68300A compatibility mode)** (continued)

| 100 TQFP | 56 QFN | 56 SSOP | Pin Name | Pin Type | Default State at Startup | Pin Description |
|---|---|---|---|---|---|---|
| 28 | N/A | N/A | NC | | | **No connect**. |
| 29 | 15 | 22 | SCL | O | Active for several ms at startup. | **Clock signal for $I^2C$ interface.** (See "SCL, SDA" on page 12). Apply a 2.2k pull up resistor. |
| 30 | 16 | 23 | SDA | I/O | | **Data signal for $I^2C$ interface.** (See "SCL, SDA" on page 12). Apply a 2.2k pull up resistor. |
| 31 32 | N/A | N/A | NC | | | **No connect.** |
| 33 | 17 | 24 | $V_{CC}$ | PWR | | **$V_{CC}$**. Connect to 3.3V power source. |
| 34 | 18 | 25 | DD0 | I/O[1] | Hi-Z | **ATA data bit 0.** |
| 35 | 19 | 26 | DD1 | I/O[1] | Hi-Z | **ATA data bit 1.** |
| 36 | 20 | 27 | DD2 | I/O[1] | Hi-Z | **ATA data bit 2**. |
| 37 | 21 | 28 | DD3 | I/O[1] | Hi-Z | **ATA data bit 3**. |
| 38 | N/A | N/A | $V_{CC}$ | PWR | | **$V_{CC}$**. Connect to 3.3V power source. |
| 39 | N/A | N/A | GND | GND | | **Ground**. |
| 40 | N/A | N/A | NC | NC | | **No connect**. |
| 41 | N/A | N/A | GND | | | **Ground**. |
| 42 | N/A | N/A | NC | NC | | **No connect**. |
| 43 | N/A | N/A | GND | | | **Ground**. |
| 44 | 22 | 29 | DD4 | I/O[1] | Hi-Z | **ATA data bit 4**. |
| 45 | 23 | 30 | DD5 | I/O[1] | Hi-Z | **ATA data bit 5**. |
| 46 | 24 | 31 | DD6 | I/O[1] | Hi-Z | **ATA data bit 6**. |
| 47 | 25 | 32 | DD7 | I/O[1] | Hi-Z | **ATA data bit 7**. Apply a 1k pull down to GND. |
| 48 | 26 | 33 | GND | GND | | **Ground**. |
| 49 | 27 | 34 | $V_{CC}$ | PWR | | **$V_{CC}$**. Connect to 3.3V power source. |
| 50 | 28 | 35 | GND | GND | | **Ground**. |
| 51 52 | N/A | N/A | NC | NC | | **No connect**. |
| 53 | N/A | N/A | $V_{CC}$ | PWR | | **$V_{CC}$**. Connect to 3.3V power source. |
| 54 | 29 | 36 | DIOW#[2] | O/Z[1] | Driven HIGH (CMOS) | **ATA control**. |
| 55 | 30 | 37 | DIOR# | O/Z[1] | Driven HIGH (CMOS) | **ATA control**. |
| 56 | 31 | 38 | DMACK# | O/Z[1] | Driven HIGH (CMOS) | **ATA control**. |
| 57 | N/A | N/A | NC | NC | | **No connect**. |
| 58 | N/A | N/A | LOWPWR# | O | | **USB suspend indicator.** (See "LOWPWR#" **on page 14**). |
| 59 60 61 | N/A | N/A | NC | NC | | **No connect.** |
| 62 | N/A | N/A | VBUSPWRD | I | Input | **Bus powered mode selector.** (See "VBUSPWRD" on page 14). |



[+] Feedback

**Table 1. AT2LP Pin Descriptions**
**Note: (Italic pin names denote pin functionality during CY7C68300A compatibility mode)** (continued)

| 100 TQFP | 56 QFN | 56 SSOP | Pin Name | Pin Type | Default State at Startup | Pin Description |
|---|---|---|---|---|---|---|
| 63<br>64 | N/A | N/A | NC | NC | | **No connect**. |
| 65 | N/A | N/A | GND | GND | | **Ground**. |
| 66 | 32 | 39 | $V_{CC}$ | PWR | | **$V_{CC}$**. Connect to 3.3V power source. |
| 67 | 33 | 40 | INTRQ | I[1] | Input | **ATA interrupt request**. |
| 68 | 34 | 41 | DA0 | O/Z[1] | Driven HIGH after 2 ms delay | **ATA address**. |
| 69 | 35 | 42 | DA1 | O/Z[1] | Driven HIGH after 2 ms delay | **ATA address**. |
| 70[3] | 36[3] | 43 | DRVPWRVLD (*DA2*) | I | Input | **Device presence detect.** (See "DRVPWRVLD" on page 14). Configurable logical polarity is controlled by EEPROM address 0x08. This pin must be pulled HIGH if functionality is not utilized.<br>**Alternate function.** Input when the EEPROM configuration byte 8 has bit 7 set to one. The input value is reported through EP1IN (byte 0, bit 0). |
| 71 | 37 | 44 | CS0# | O/Z[1] | Driven HIGH after 2 ms delay | **ATA chip select**. |
| 72 | 38 | 45 | CS1# | O/Z[1] | Driven HIGH after 2 ms delay | **ATA chip select**. |
| 73 | 39 | 46 | DA2 (*VBUS_PWR_VALID*) | O/Z[1] | Driven HIGH after 2 ms delay | **ATA address**. |
| 74 | 40 | 47 | ARESET# | O/Z[1] | | **ATA reset**. |
| 75 | 41 | 48 | GND | GND | | **Ground**. |
| 76 | N/A | N/A | NC | NC | | **No connect**. |
| 77 | 42 | 49 | RESET# | I | Input | **Chip reset** (See "RESET#" on page 15). |
| 78 | 43 | 50 | $V_{CC}$ | PWR | | **$V_{CC}$**. Connect to 3.3V power source. |
| 79 | 44 | 51 | VBUS_ATA_ENABLE (*ATA_EN*) | I | Input | **VBUS detection** (See "VBUS_ATA_ENABLE" on page 14). |
| 80 | 45 | 52 | DD8 | I/O[1] | Hi-Z | **ATA data bit 8**. |
| 81 | 46 | 53 | DD9 | I/O[1] | Hi-Z | **ATA data bit 9**. |
| 82 | 47 | 54 | DD10 | I/O[1] | Hi-Z | **ATA data bit 10**. |
| 83 | 48 | 55 | DD11 | I/O[1] | Hi-Z | **ATA data bit 11**. |
| 84 | N/A | N/A | GND | | | **Ground**. |
| 85 | N/A | N/A | $V_{CC}$ | PWR | | **$V_{CC}$**. Connect to 3.3V power source. |
| 86<br>87 | N/A | N/A | NC | NC | | **No connect**. |
| 88<br>89<br>90<br>91<br>92<br>93 | 36[3]<br>13[3]<br>54[3] | N/A | GPIO0<br>GPIO1<br>GPIO2<br>GPIO3<br>GPIO4<br>GPIO5 | I/O[3] | | **General purpose I/O pins** (See "GPIO Pins" on page 14). The GPIO pins must be tied to GND if functionality is not used. |



[+] Feedback

**Table 1. AT2LP Pin Descriptions**

**Note: (Italic pin names denote pin functionality during CY7C68300A compatibility mode)** (continued)

| 100 TQFP | 56 QFN | 56 SSOP | Pin Name | Pin Type | Default State at Startup | Pin Description |
|---|---|---|---|---|---|---|
| 94 | N/A | N/A | GND | GND | | **Ground**. |
| 95 | 49 | 56 | DD12 | I/O[1] | Hi-Z | **ATA data bit 12**. |
| 96 | 50 | 1 | DD13 | I/O[1] | Hi-Z | **ATA data bit 13**. |
| 97 | 51 | 2 | DD14 | I/O[1] | Hi-Z | **ATA data bit 14**. |
| 98 | 52 | 3 | DD15 | I/O[1] | Hi-Z | **ATA data bit 15**. |
| 99 | 53 | 4 | GND | GND | | **Ground**. |
| 100[3] | 54[3] | 5 | ATAPUEN (*NC*) | I/O | | **Bus-powered ATA pull up voltage source** (see "ATAPUEN" on page 14).<br>**Alternate function**: General purpose input when the EEPROM configuration byte 8 has bit 7 set to '1'. The input value is reported through EP1IN (byte 0, bit 2). |

## Additional Pin Descriptions

The following sections provide additional pin information.

*DPLUS, DMINUS*

DPLUS and DMINUS are the USB signaling pins; they must be tied to the D+ and D– pins of the USB connector. Because they operate at high frequencies, the USB signals require special consideration when designing the layout of the PCB. See "General PCB Layout Recommendations for USB Mass Storage Designs" on page 40 for PCB layout recommendations.

When RESET# is released, the assertion of the internal pull up on D+ is gated by a combination of the state of the VBUS_ATA_ENABLE pin, the value of configuration address 0x08 bit 0 (DRVPWRVLD Enable), and the detection of a non-removable ATA/ATAPI drive on the IDE bus. See Table 2 for a description of this relationship.

**Table 2. D+ Pull Up Assertion Dependencies**

| | | | | | | |
|---|---|---|---|---|---|---|
| VBUS_ATA_EN | 1 | 1 | 1 | 1 | 0 | 0 |
| DRVPWRVLD Enable Bit | 1 | 1 | 0 | 0 | 1 | 1 |
| ATA/ATAPI Drive Detected | Yes | No | Yes | No | Yes | No |
| **State of D+ pull up** | **1** | **1** | **1** | **0** | **0** | **0** |

*SCL, SDA*

The clock and data pins for the $I^2C$ port must be connected to the configuration EEPROM and to 2.2K pull up resistors tied to $V_{CC}$. If no EEPROM is used in the design, the SCL and SDA pins must still be connected to pull up resistors. The SCL and SDA pins are active for several milliseconds at startup.

*XTALIN, XTALOUT*

The AT2LP requires a 24 MHz (±100 ppm) signal to derive internal timing. Typically, a 24 MHz (12 pF, 500 µW, parallel-resonant, fundamental mode) crystal is used, but a 24 MHz square wave (3.3V, 50/50 duty cycle) from another source can also be used. If a crystal is used, connect its pins to XTALIN and XTALOUT, and also through 12 pF capacitors to GND as shown in Figure 7. If an alternate clock source is used, apply it to XTALIN and leave XTALOUT unconnected.

**Figure 7. XTALIN/XTALOUT Diagram**

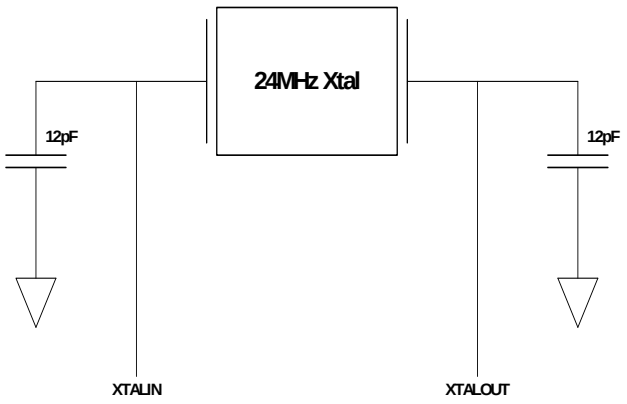




[+] Feedback

*SYSIRQ*

The SYSIRQ pin provides a way for systems to request service from host software by using the USB Interrupt pipe on endpoint 1 (EP1). If the AT2LP has no pending interrupt data to return, USB interrupt pipe data requests are NAKed. If pending data is available, the AT2LP returns 16 bits of data. This data indicates whether AT2LP is operating in high speed or full speed, whether the AT2LP is reporting self-powered or bus-powered operation, and the states of any GPIO pins that are configured as inputs. GPIO pins can be individually set as inputs or outputs, with byte 0x09 of the configuration data. The state of any GPIO pin that is not set as an input is reported as '0' in the EP1 data.

Table 3 gives the bitmap for the data returned on the interrupt pipe and Figure 8 depicts the latching algorithm incorporated by the AT2LP.

The SYSIRQ pin must be pulled LOW if HID functionality is used. Refer to "HID Functions for Button Controls" on page 15 for more details on HID functionality.

**Table 3. Interrupt Data Bitmap**

| EP1 Data Byte 1 | | | | | | | | EP1 Data Byte 0 | | | | | | | |
|---|---|---|---|---|---|---|---|---|---|---|---|---|---|---|---|
| 7 | 6 | 5 | 4 | 3 | 2 | 1 | 0 | 7 | 6 | 5 | 4 | 3 | 2 | 1 | 0 |
| RESERVED | RESERVED | RESERVED | RESERVED | RESERVED | RESERVED | USB High Speed | VBUS Powered | RESERVED | RESERVED | GPIO[5] | GPIO[4] | GPIO[3] | GPIO[2] | GPIO[1] | GPIO[0] |

**Figure 8. SYSIRQ Latching Algorithm**

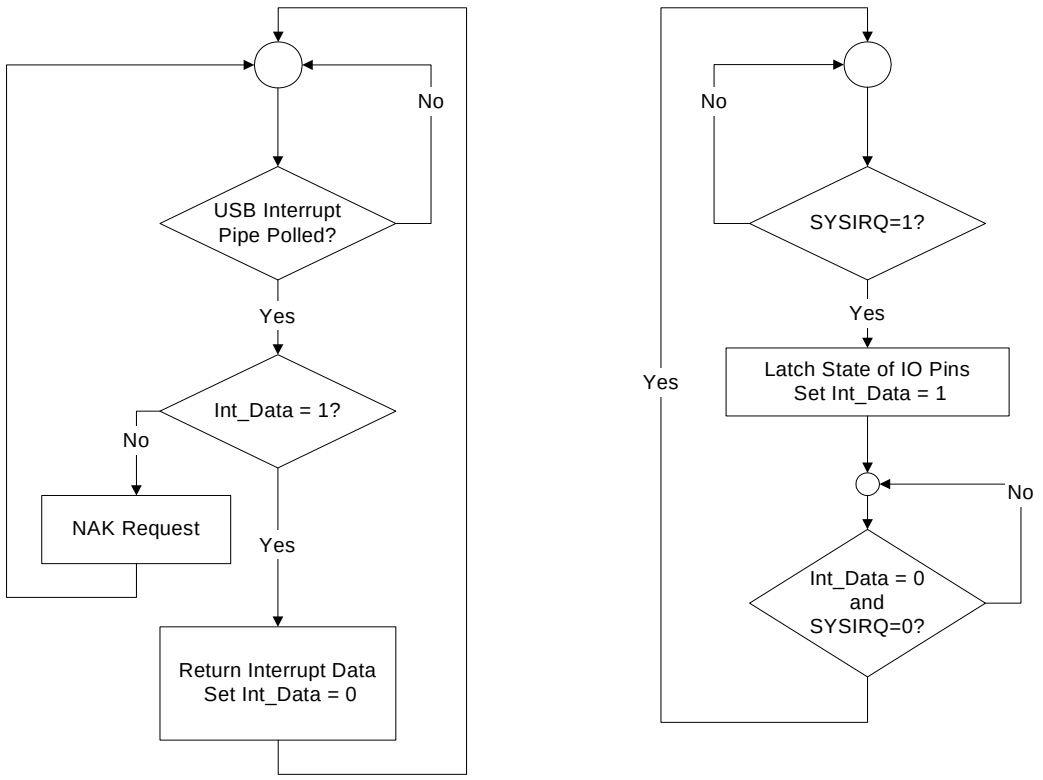




[+] Feedback

*DRVPWRVLD*

When this pin is enabled with bit 0 of configuration address 0x08 (DRVPWRVLD Enable), the AT2LP informs the host that a removable device, such as a CF card, is present. The AT2LP uses DRVPWRVLD to detect that the removable device is present. Pin polarity is controlled by bit 1 of configuration address 0x08. When DRVPWRVLD is deasserted, the AT2LP reports a “no media present” status (ASC = 0x3A, ASQ = 0x00) when queried by the host. When the media has been detected again, the AT2LP reports a “media changed” status to the host (ASC = 0x28, ASQ = 0x00) when queried.

When a removable device is used, it is always considered by the AT2LP to be the IDE master device. Only one removable device may be attached to the AT2LP. If the system only contains a removable device, bit 6 of configuration address 0x08 (Search ATA Bus) must be set to ‘0’ to disable ATA device detection at startup. If a non-removable device is connected in addition to a removable media device, the non-removable device must be configured as IDE slave (device address 1).

*GPIO Pins*

The GPIO pins enable a general purpose input and output interface. There are several different interfaces to the GPIO pins:

- Configuration bytes 0x09 and 0x0A contain the default settings for the GPIO pins upon initial AT2LP configuration.
- The host can modify the settings of the GPIO pins during operation. This is done with vendor-specific commands described in “Programming the EEPROM” on page 34.
- The status of the GPIO pins is returned on the interrupt endpoint (EP1) in response to a SYSIRQ. See “SYSIRQ” on page 13 for SYSIRQ details.

*LOWPWR#*

LOWPWR# is an output pin that is driven to ‘0’ when the AT2LP is not in suspend. LOWPWR# is placed in Hi-Z when the AT2LP is in a suspend state. This pin only indicates the state of the AT2LP and must not be used to determine the status of the USB host because of variations in the behavior of different hosts.

*ATA Interface Pins*

The ATA Interface pins must be connected to the corresponding pins on an IDE connector or mass storage device. To enable sharing of the IDE bus with other master devices, the AT2LP can place all ATA Interface Pins in a Hi-Z state whenever VBUS_ATA_ENABLE is not asserted. Enabling this feature is done by setting bit 4 of configuration address 0x08 to ‘1’. Otherwise, the ATA bus is driven by the AT2LP to a default inactive state whenever VBUS_ATA_ENABLE is not asserted.

Design practices for signal integrity as outlined in the ATA/ATAPI-6 specification must be followed with systems that utilize a ribbon cable interconnect between the AT2LP’s ATA interface and the attached mass storage device, especially if Ultra DMA Mode is used.

*VBUS_ATA_ENABLE*

VBUS_ATA_ENABLE is typically used to indicate to the AT2LP that power is present on VBUS. This pin is polled by the AT2LP at startup and then every 20 ms thereafter. If this pin is ‘0’, the AT2LP releases the pull up on D+ as required by the USB specification.

Also, if bit 4 of configuration address 0x08 is ‘1’, the ATA interface pins are placed in a Hi-Z state when VBUS_ATA_ENABLE is ‘0’. If bit 4 of configuration address 0x08 is ‘0’, the ATA interface pins are still driven when VBUS_ATA_ENABLE is ‘0’.

*ATAPUEN*

This output can be used to control the required host pull up resistors on the ATA interface in a bus-powered design to minimize unnecessary power consumption when the AT2LP is in suspend. ATAPUEN is driven to ‘0’ when the ATA bus is inactive. ATAPUEN is driven to ‘1’ when the ATA bus is active. ATAPUEN is set to a Hi-Z state along with all other ATA interface pins if VBUS_ATA_ENABLE is deasserted and the ATA_EN functionality (bit 4 of configuration address 0x08) is enabled (0).

ATAPUEN can also be configured as a GPIO input. See “HID Functions for Button Controls” on page 15 for more information on HID functionality.

*PWR500#*

The AT2LP asserts PWR500# to indicate that VBUS current may be drawn up to the limit specified by the bMaxPower field of the USB configuration descriptors. If the AT2LP enters a low-power state, PWR500# is deasserted. When normal operation is resumed, PWR500# is restored. The PWR500# pin must never be used to control power sources for the AT2LP. In the 56-pin package, PWR500# only functions during bus-powered operation.

PWR500# can also be configured as a GPIO input. See “HID Functions for Button Controls” on page 15 for more information on HID functionality.

*VBUSPWRD*

VBUSPWRD is used to indicate self- or bus-powered operation. Some designs require the ability to operate in either self- or bus-powered modes. The VBUSPWRD input pin enables these devices to switch between self-powered and bus-powered modes by changing the contents of the bMaxPower field and the self-powered bit in the reported configuration descriptors (see Table 4).

Note that current USB host drivers do not poll the device for this information, so the effect of this pin is only seen on a USB or power on reset.

**Table 4. Behavior of Descriptor Data that is Dependent Upon VBUSPWRD State**

| Pin | VBUSPWRD = ‘1’ | VBUSPWRD = ‘0’ | VBUSPWRD N/A (56-pin) |
|---|---|---|---|
| bMaxPower Reported Value | 0xFA (500 mA) | 0x01 (2 mA) | The value from configuration address 0x34 is used. |
| bmAttributes bit 6 Reported Value | ‘0’ (bus-powered) | ‘1’ (self-powered) | ‘0’ if bMaxPower > 0x01 ‘1’ if bMaxPower ≤ 0x01 |



[+] Feedback

*RESET#*

Asserting RESET# for 10 ms resets the entire AT2LP. In self-powered designs, this pin is normally tied to $V_{CC}$ through a 100k resistor, and to GND through a 0.1 µF capacitor, as shown in Figure 9.

Cypress does not recommend an RC reset circuit for bus-powered devices because of the potential for VBUS voltage drop, which may result in a startup time that exceeds the USB limit. Refer to the application note titled *EZ-USB FX2™/AT2™/SX2™ Reset and Power Considerations,* at www.cypress.com, for more information.

While the AT2LP is in reset, all pins are held at their default startup state.

**Figure 9. R/C Reset Circuit for Self-Powered Designs**

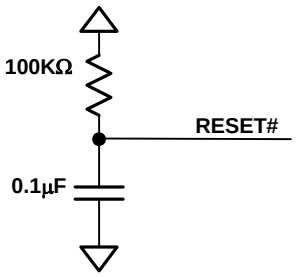


## HID Functions for Button Controls

Cypress's CY7C68320C/CY7C68321C has the capability of supporting Human Interface Device (HID) signaling to the host.

If there is a HID descriptor in the configuration data, the GPIO pins that are set as inputs are polled by the AT2LP logic approximately every 17 ms (depending on other internal interrupt routines). If a change is detected in the state of any HID-enabled GPIO, an HID report is sent through EP1 to the host. The report format for byte 0 and byte 1 are shown in Table 5.

The ability to add buttons to a mass storage solution opens new applications for data backup and other device-side notification to the host. The AT2LP Blaster software, found in the CY4615C files, provides an easy way to enable and modify the HID features of the AT2LP.

GPIO pins can be individually set as inputs or outputs, with byte 0x09 of the configuration data, enabling a mix of HID and general purpose outputs. GPIOs that are not configured as inputs are reported with a value of '0' in the HID data. The RESERVED bits' values must be ignored, and Cypress recommends using a bitmask in software to filter out unused HID data.

Note that if using the 56-pin package, the reported GPIO[5:3] values must be ignored because the pins are not actually present.

**Table 5. HID Data Bitmap**

| USB Interrupt Data Byte 1 | | | | | | | | USB Interrupt Data Byte 0 | | | | | | | |
|---|---|---|---|---|---|---|---|---|---|---|---|---|---|---|---|
| 7 | 6 | 5 | 4 | 3 | 2 | 1 | 0 | 7 | 6 | 5 | 4 | 3 | 2 | 1 | 0 |
| RESERVED | RESERVED | RESERVED | RESERVED | RESERVED | RESERVED | USB High Speed | VBUS Powered | RESERVED | RESERVED | GPIO[5] | GPIO[4] | GPIO[3] | GPIO[2] | GPIO[1] | GPIO[0] |

## Functional Overview

Chip functionally is described in the subsequent sections.

### USB Signaling Speed

AT2LP operates at the following two rates defined in the *USB Specification Revision 2.0* dated April 27, 2000:

- Full speed, with a signaling bit rate of 12 Mbits/sec.
- High speed, with a signaling bit rate of 480 Mbits/sec.

AT2LP does not operate at the low-speed signaling rate of 1.5 Mbits/sec.

### ATA Interface

The ATA/ATAPI port on the AT2LP is compatible with the *Information Technology–AT Attachment with Packet Interface–6 (ATA/ATAPI-6) Specification, T13/1410D Rev 2a*. The AT2LP supports both ATAPI packet commands as well as ATA commands (by use of ATA Command Blocks), as outlined in "ATA Command Block (ATACB)" on page 15. Refer to the *USB Mass Storage Class (MSC) Bulk Only Transport (BOT)* Specification for information on Command Block formatting.

Additionally, the AT2LP translates *ATAPI SFF-8070i* commands to ATA commands for seamless integration of ATA devices with generic Mass Storage Class BOT drivers.

*ATA Command Block (ATACB)*

The ATA Command Block (ATACB) functionality provides a means of passing ATA commands and ATA register accesses to the attached device for execution. ATACB commands are transferred in the Command Block Wrapper Command Block (CBWCB) portion of the Command Block Wrapper (CBW). The ATACB is distinguished from other command blocks by having the first two bytes of the command block match the bVSCBSignature and bVSCBSubCommand values that are defined in Table 6. Only command blocks that have a valid bVSCBSignature and bVSCBSubCommand are interpreted as ATA Command Blocks. All other fields of the CBW and restrictions on the CBWCB remain as defined in the USB Mass Storage Class Bulk-Only Transport Specification. The ATACB must be 16 bytes in length. The following table and text defines the fields of the ATACB.



[+] Feedback

**Table 6. ATACB Field Descriptions**

| Byte | Field Name | Field Description |
|---|---|---|
| 0 | bVSCBSignature | This field indicates to the CY7C68300C/CY7C68301C that the ATACB contains a vendor-specific command block. This value of this field must match the value in EEPROM address 0x04 for the command to be recognized as a vendor-specific ATACB command. |
| 1 | bVSCBSubCommand | This field must be set to 0x24 for ATACB commands. |
| 2 | bmATACBActionSelect | This field controls the execution of the ATACB according to the bitfield values:<br>Bit 7 *IdentifyPacketDevice* – This bit indicates that the data phase of the command contains ATAPI (0xA1) or ATA (0xEC) IDENTIFY device data. Setting IdentifyPacketDevice when the data phase does not contain IDENTIFY device data results in unspecified device behavior.<br>0 = Data phase does not contain IDENTIFY device data<br>1 = Data phase contains ATAPI or ATA IDENTIFY device data<br>Bit 6 *UDMACommand* – This bit enables supported UDMA device transfers. Setting this bit when a non-UDMA capable device is attached results in undetermined behavior.<br>0 = Do not use UDMA device transfers (only use PIO mode)<br>1 = Use UDMA device transfers<br>Bit 5 *DEVOverride* – This bit determines whether the DEV bit value is taken from the value assigned to the LUN during startup or from the ATACB.<br>0 = The DEV bit is taken from the value assigned to the LUN during startup<br>1 = The DEV bit is taken from the ATACB field 0x0B, bit 4<br>Bit 4 *DErrorOverride* – This bit controls the device error override feature. This bit must not be set during a bmATACBActionSelect TaskFileRead.<br>0 = Data accesses are halted if a device error is detected<br>1 = Data accesses are not halted if a device error is detected<br>Bit 3 *PErrorOverride* – This bit controls the phase error override feature. This bit must not be set during a bmATACBActionSelect TaskFileRead.<br>0 = Data accesses are halted if a phase error is detected<br>1 = Data accesses are not halted if a phase error is detected<br>Bit 2 *PollAltStatOverride* – This bit determines whether or not the Alternate Status register is polled and the BSY bit is used to qualify the ATACB operation.<br>0 = The AltStat register is polled until BSY=0 before proceeding with the ATACB operation<br>1 = The ATACB operation is executed without polling the AltStat register.<br>Bit 1 *DeviceSelectionOverride* – This bit determines when the device selection is performed in relation to the command register write accesses.<br>0 = Device selection is performed before command register write accesses<br>1 = Device selection is performed following command register write accesses<br>Bit 0 *TaskFileRead* – This bit determines whether or not the taskfile register data selected in bmATACBRegisterSelect is returned. If this bit is set, the dCBWDataTransferLength field must be set to 8.<br>0 = Execute ATACB command and data transfer (if any)<br>1 = Only read taskfile registers selected in bmATACBRegisterSelect and return 0x00h for all others. The format of the 8 bytes of returned data is as follows:<br>❒ Address offset 0x00 (0x3F6) – Alternate Status<br>❒ Address offset 0x01 (0x1F1) – Features/Error<br>❒ Address offset 0x02 (0x1F2) – Sector Count<br>❒ Address offset 0x03 (0x1F3) – Sector Number<br>❒ Address offset 0x04 (0x1F4) – Cylinder Low<br>❒ Address offset 0x05 (0x1F5) – Cylinder High<br>❒ Address offset 0x06 (0x1F6) – Device/Head<br>❒ Address offset 0x07 (0x1F7) – Command/Status |



[+] Feedback

**Table 6. ATACB Field Descriptions** (continued)

| Byte | Field Name | Field Description |
|---|---|---|
| 3 | bmATACBRegisterSelect | This field controls which of the taskfile register read or write accesses occur. Taskfile read data is always 8 bytes in length, and unselected register data are returned as 0x00. Register accesses occur in sequential order as outlined here (0 to 7):<br>Bit 0 *(0x3F6)* Device Control/Alternate Status<br>Bit 1 *(0x1F1)* Features/Error<br>Bit 2 *(0x1F2)* Sector Count<br>Bit 3 *(0x1F3)* Sector Number<br>Bit 4 *(0x1F4)* Cylinder Low<br>Bit 5 *(0x1F5)* Cylinder High<br>Bit 6 *(0x1F6)* Device/Head<br>Bit 7 *(0x1F7)* Command/Status |
| 4 | bATACBTransferBlockCount | This value indicates the maximum requested block size be in 512-byte increments. This value must be set to the last value used for the 'Sectors per block' in the SET_MULTIPLE_MODE command. Legal values are 0, 1, 2, 4, 8, 16, 32, 64, and 128 where 0 indicates 256 sectors per block. A command failed status is returned if an illegal value is used in the ATACB. |
| 5–12 | bATACBTaskFileWriteData | These bytes contain ATA register data used with ATA command or PIO write operations. Only registers selected in bmATACBRegisterSelect are required to hold valid data when accessed. The registers are as follows.<br>ATACB Address Offset 0x05 *(0x3F6)* – Device Control<br>ATACB Address Offset 0x06 *(0x1F1)* – Features<br>ATACB Address Offset 0x07 *(0x1F2)* – Sector Count<br>ATACB Address Offset 0x08 *(0x1F3)* – Sector Number<br>ATACB Address Offset 0x09 *(0x1F4)* – Cylinder Low<br>ATACB Address Offset 0x0A *(0x1F5)* – Cylinder High<br>ATACB Address Offset 0x0B *(0x1F6)* – Device<br>ATACB Address Offset 0x0C *(0x1F7)* – Command |
| 13–15 | Reserved | These bytes must be set to 0x00 for ATACB commands. |



[+] Feedback

## Operating Modes

The different modes of operation and EEPROM information are presented in the following sections.

### Operational Mode Selection Flow

During the power up sequence, the AT2LP queries the $I^2C$ bus for an EEPROM. The AT2LP then selects a pinout configuration as shown here, and checks to see if ARESET# is configured for Board Manufacturing Test Mode.

- If no EEPROM is detected, the AT2LP uses the values in the factory-programmable (fused) memory space. See "Fused Memory Data" on page 19 for more information. This is not a valid mode of operation if no factory programming has been done.
- If an EEPROM signature of 0x4D4D is found, the CY7C68300C/CY7C68301C uses the same pinout and EEPROM format as the CY7C68300A (EZ-USB AT2+).
- If an EEPROM signature of 0x534B is found, the AT2LP uses the values stored in the EEPROM to configure the USB descriptors for normal operation.
- If an EEPROM is detected, but an invalid signature is read, the AT2LP defaults into Board Manufacturing Test Mode.

**Figure 10. Operational Mode Selection Flow**

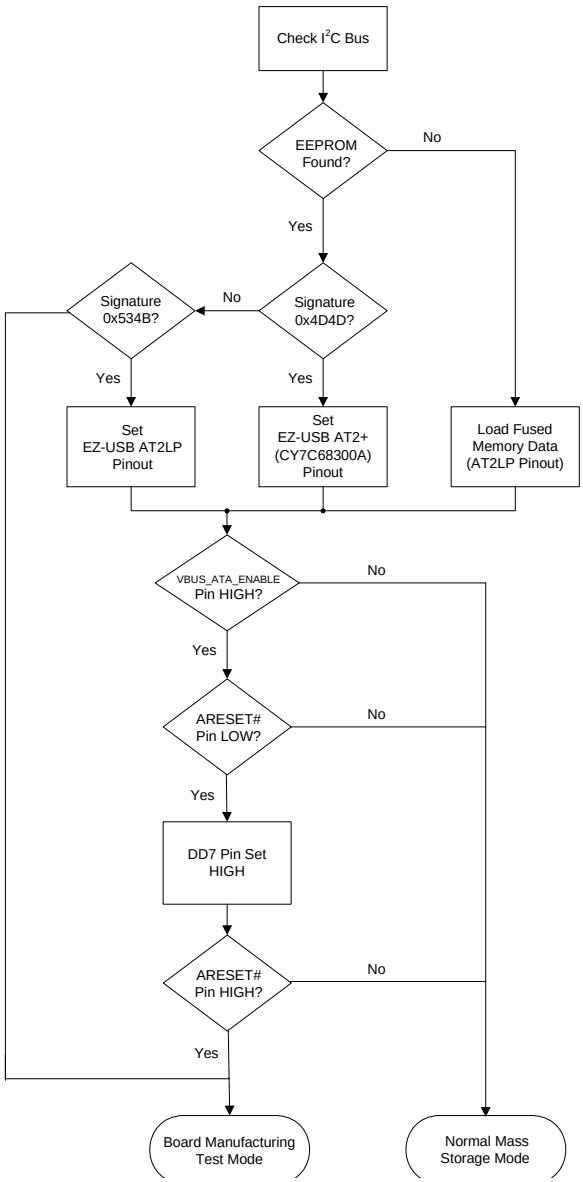




[+] Feedback

## Fused Memory Data

When no EEPROM is detected at startup, the AT2LP enumerates with the VID/PID/DID values that are stored in the fused memory space. These values can be programmed into the AT2LP during chip manufacturing for high volume applications to avoid the need for an external EEPROM in some designs. Contact your local Cypress Semiconductor sales office for more information on this feature.

If no factory programming has been done, the values returned from the fused memory space would all be 0x00, which is not a valid mode of operation. In this case the chip uses the manufacturing mode and return the default descriptors (VID/PID of 0x4B4/0x6830). An EEPROM must be used with designs that do not use factory-programmed chips in order to identify the device as your company's product.

## Normal Mass Storage Mode

In Normal Mass Storage Mode, the chip behaves as a USB 2.0 to ATA/ATAPI bridge. This includes all typical USB device states (powered, configured, etc.). The USB descriptors are returned according to the values stored in the external EEPROM or fused memory space. A unique serial number is required for Mass Storage Class Bulk-Only Transport compliance, which is one reason why an EEPROM or factory-programmed part is needed.

## Board Manufacturing Test Mode

In Board Manufacturing Test Mode the AT2LP behaves as a USB 2.0 device but the ATA/ATAPI interface is not fully active. This mode must not be used for mass storage operation in a finished design. In this mode, the AT2LP enable reading from and writing to the EEPROM, and for board level testing, through vendor specific ATAPI commands utilizing the CBW Command Block as described in the USB *Mass Storage Class Bulk-Only Transport Specification*. There is a vendor-specific ATAPI command for EEPROM accesses (CfgCB) and one for board level testing (MfgCB), as described in the following sections.

There is a convenient method available for starting the AT2LP in Board Manufacturing Test Mode to enable reprogramming of EEPROMs without a mass storage device attached. If the ATA Reset (ARESET#) line is LOW on power up, the AT2LP enters Board Manufacturing Test Mode. It is recommended that a 10k resistor be used to pull ARESET# to LOW. An easy way to pull the ARESET# line LOW is to short pins 1 and 3 on the 40-pin ATA connector with a 10k resistor, that ties the ARESET# line to the required pull down on DD7.

### *CfgCB*

The cfg_load and cfg_read vendor-specific commands are passed down through the bulk pipe in the CBWCB portion of the CBW. The format of this CfgCB is shown as follows. Byte 0 is a vendor-specific command designator whose value is configurable and set in the configuration data (address 0x04). Byte 1 must be set to 0x26 to identify it as a CfgCB command. Byte 2 is reserved and must be set to zero. Byte 3 is used to determine the memory source to write/read. For the AT2LP, this byte must be set to 0x02, indicating the EEPROM is present. Bytes 4 and 5 are used to determine the start address, which must always be 0x0000. Bytes 6 through 15 are reserved and must be set to zero.

The data transferred to the EEPROM must be in the format specified in Table 11 of this data sheet. Maximum data transfer size is 255 bytes.

The data transfer length is determined by the CBW Data Transfer Length specified in bytes 8 through 11 (dCBWDataTransferLength) of the CBW (refer to Table 7). The type/direction of the command is determined by the direction bit specified in byte 12, bit 7 (bmCBWFlags) of the CBW (refer to Table 7).

**Table 7. Command Block Wrapper**

| | Bits | | | | | | | |
|---|---|---|---|---|---|---|---|---|
| **Offset** | **7** | **6** | **5** | **4** | **3** | **2** | **1** | **0** |
| 0–3 | DCBWSignature | | | | | | | |
| 4–7 | dCBWTag | | | | | | | |
| **8–11** (08h–0Bh) | dCBWDataTransferLength | | | | | | | |
| **12** (0Ch) | bwCBWFLAGS | | | | | | | |
| | Dir | Obsolete | Reserved (0) | | | | | |
| 13 (0Dh) | Reserved (0) | | | | bCBWLUN | | | |
| 14 (0Eh) | Reserved (0) | | | bCBWCBLength | | | | |
| 15–30 (0Fh1Eh) | CBWCB (CfgCB or MfgCB) | | | | | | | |



[+] Feedback

**Table 8. Example CfgCB**

| Offset | CfgCB Byte Descriptions | Bits | | | | | | | |
|---|---|---|---|---|---|---|---|---|---|
| | | 7 | 6 | 5 | 4 | 3 | 2 | 1 | 0 |
| 0 | bVSCBSignature (set in configuration bytes) | 0 | 0 | 1 | 0 | 0 | 1 | 0 | 0 |
| 1 | bVSCBSubCommand (must be 0x26) | 0 | 0 | 1 | 0 | 0 | 1 | 1 | 0 |
| 2 | Reserved (must be set to zero) | 0 | 0 | 0 | 0 | 0 | 0 | 0 | 0 |
| 3 | Data Source (must be set to 0x02) | 0 | 0 | 0 | 0 | 0 | 0 | 1 | 0 |
| 4 | Start Address (LSB) (must be set to zero) | 0 | 0 | 0 | 0 | 0 | 0 | 0 | 0 |
| 5 | Start Address (MSB) (must be set to zero) | 0 | 0 | 0 | 0 | 0 | 0 | 0 | 0 |
| 6–15 | Reserved (must be set to zero) | 0 | 0 | 0 | 0 | 0 | 0 | 0 | 0 |

*MfgCB*

The mfg_load and mfg_read vendor-specific commands are passed down through the bulk pipe in the CBWCB portion of the CBW. The format of this MfgCB is shown as follows. Byte0 is a vendor-specific command designator whose value is configurable and set in the AT2LP configuration data. Byte 1 must be 0x27 to identify a MfgCB. Bytes 2 through 15 are reserved and must be set to zero.

The data transfer length is determined by the CBW Data Transfer Length specified in bytes 8 through 11 (dCBWDataTransferLength) of the CBW. The type and direction of the command is determined by the direction bit specified in byte 12, bit 7 (bmCBWFlags) of the CBW.

**Table 9. Example MfgCB**

| Offset | MfgCB Byte Description | Bits | | | | | | | |
|---|---|---|---|---|---|---|---|---|---|
| | | 7 | 6 | 5 | 4 | 3 | 2 | 1 | 0 |
| 0 | 0 bVSCBSignature (set in configuration bytes) | 0 | 0 | 1 | 0 | 0 | 1 | 0 | 0 |
| 1 | 1 bVSCBSubCommand (hardcoded 0x27) | 0 | 0 | 1 | 0 | 0 | 1 | 1 | 1 |
| 2–15 | 2–15 Reserved (must be zero) | 0 | 0 | 0 | 0 | 0 | 0 | 0 | 0 |

Mfg_load

During a Mfg_load, the AT2LP enters into Manufacturing Test Mode. Manufacturing Test Mode is provided as a means to implement board or system level interconnect tests. During Manufacturing Test Mode operation, all outputs not directly associated with USB operation are controllable. Normal control of the output pins are disabled. Control of the select AT2LP I/O pins and their tri-state controls are mapped to the ATAPI data packet associated with this request. (See Table 10 for an explanation of the required Mfg_load data format.) Any data length can be specified, but only bytes 0 through 3 are mapped to pins, so a length of 4 bytes is recommended. To exit Manufacturing Test Mode, a hard reset (toggle RESET#) is required.

Mfg_read

This USB request returns a 'snapshot' of select AT2LP input pins. AT2LP input pins not directly associated with USB operation can be sampled at any time during Manufacturing Test Mode operation. See Table 10 for an explanation of the Mfg_read data format. Any data length can be specified, but only bytes 0 through 3 contain usable information, so a length of 4 bytes is recommended.

**Table 10. Mfg_read and Mfg_load Data Format**

| Byte | Bits | Read/Load | Function |
|---|---|---|---|
| 0 | 7 | R/L | ARESET# |
| | 6 | R | DA2 |
| | 5:4 | R/L | CS#[1:0] |
| | 3 | R/L | DRVPWRVLD |
| | 2:1 | R/L | DA[1:0] |
| | 0 | R | INTRQ |
| 1 | 7 | L | DD[15:0] High-Z Status<br>0 = Hi-Z all DD pins<br>1 = Drive DD pins |
| | 6 | R | MFG_SEL<br>0 = Mass Storage Mode<br>1 = Manufacturing Mode |
| | 5 | R | VBUS_ATA_ENABLE |
| | 4 | R | DMARQ |
| | 3 | R | IORDY |
| | 2 | R/L | DMACK# |
| | 1 | R/L | DIOR# |
| | 0 | R/L | DIOW# |
| 2 | 7:0 | R/L | DD[7:0] |
| 3 | 7:0 | R/L | DD[15:8] |



[+] Feedback

## EEPROM Organization

The contents of the recommended 256-byte (2048-bit) $I^2C$ EEPROM are arranged as follows. In Table 11, the column labeled 'Required Contents' contains the values that must be used for proper operation of the AT2LP. The column labeled 'Variable Contents' contains suggested entries and values that may vary (such as string lengths) according to the EEPROM data. Some values, such as the Vendor ID, Product ID and device serial number, must be customized to meet USB compliance. The 'AT2LP Blaster' tool in the CY4615C kit can be used to edit and program these values into an AT2LP-based product (refer to Figure 11). The 'AT2LP Primer' tool can be used to program AT2LP-based products in a manufacturing environment and provides for serial number randomization. See "Board Manufacturing Test Mode" on page 19 for details on how to use vendor-specific ATAPI commands to read and program the EEPROM.

The address pins on the serial EEPROM must be set such that the EEPROM is at physical address 2 (A0 = 0, A1 = 1, A2 = 0) or address 4 (A0 = 0, A1 = 0, A2 = 1) for EEPROM devices that are internally byte-addressed memories. It is recommended that the address pins be set this way even on EEPROMs that may indicate that the address pins are internal no-connects.

**Figure 11. Snapshot of 'AT2LP Blaster' Utility**

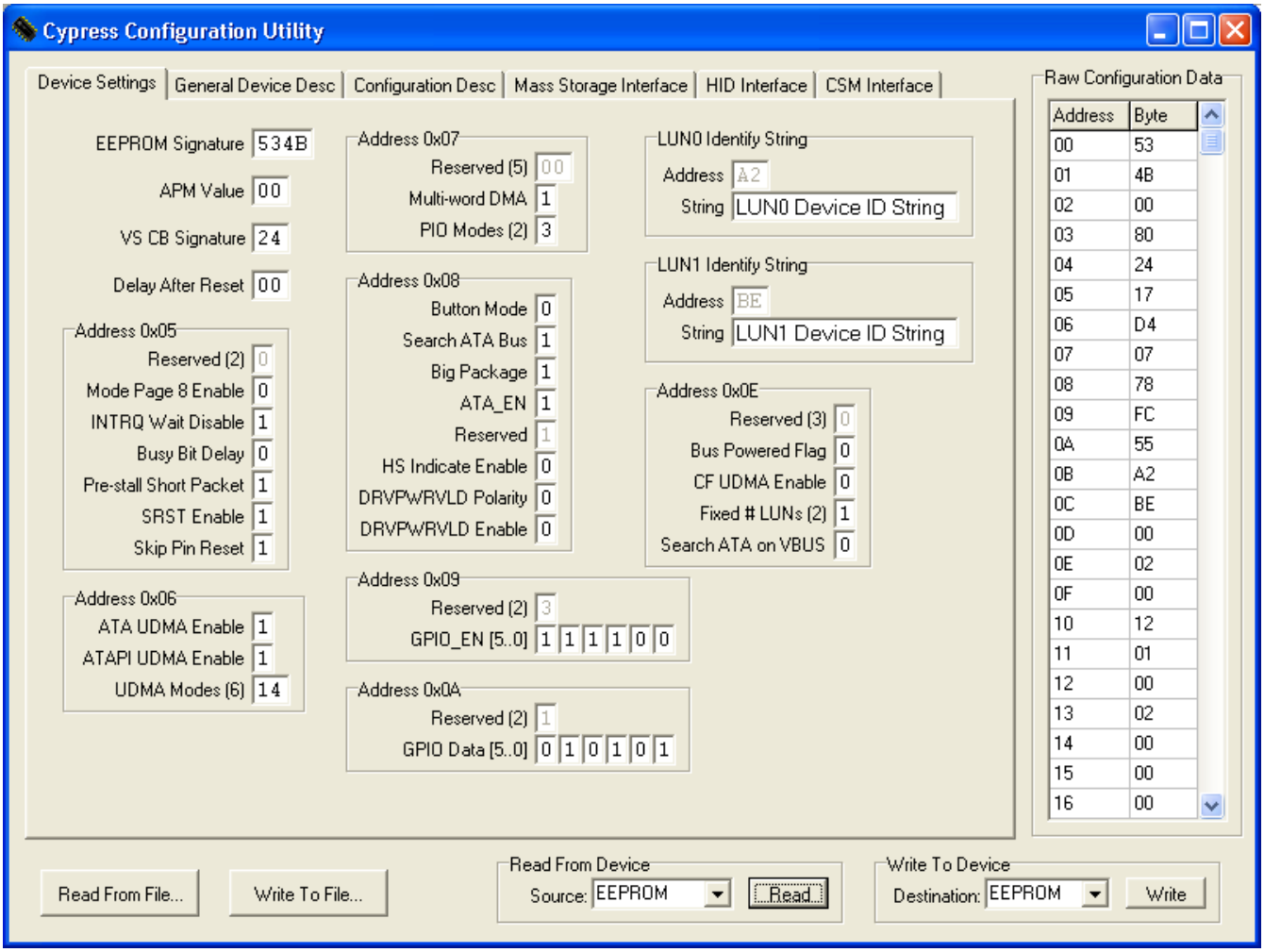




[+] Feedback

**Table 11. Configuration Data Organization**

| Byte Address | Configuration Item Name | Configuration Item Description | Required Contents | Variable Contents |
|---|---|---|---|---|
| **Note** Devices running in Backward Compatibility (CY7C68300A) Mode must use the CY7C68300A EEPROM organization, and not the format shown in this document. Refer to the *CY7C68300A data sheet* for the CY7C68300A EEPROM format. | | | | |
| **AT2LP Configuration** | | | | |
| 0x00 | EEPROM signature byte 0 | $I^2C$ EEPROM signature byte 0. This byte must be 0x53 for proper AT2LP pin configuration. | 0x53 | |
| 0x01 | EEPROM signature byte 1 | $I^2C$ EEPROM signature byte 1. This byte must be 0x4B for proper AT2LP pin configuration. | 0x4B | |
| 0x02 | APM Value | ATA Device Automatic Power Management Value. If an attached ATA device supports APM and this field contains other than 0x00, the AT2LP issues a SET_FEATURES command to Enable APM with this value during the drive initialization process. Setting APM Value to 0x00 disables this functionality. This value is ignored with ATAPI devices. | | 0x00 |
| 0x03 | Reserved | Must be set to 0x00. | | 0x00 |
| 0x04 | bVSCBSignature Value | Value in the first byte of the CBW CB field that designates that the CB is to be decoded as vendor specific ATA commands instead of the ATAPI command block. See "Functional Overview" on page 15 for more detail on how this byte is used. | | 0x24 |
| 0x05 | Reserved | Bits 7:6 | | 0x07 |
| | Enable mode page 8 | Bit 5<br>Enable the write caching mode page (page 8). If this page is enabled, Windows disables write caching by default, which limits write performance.<br>0= Disable mode page 8.<br>1= Enable mode page 8. | | |
| | Disable wait for INTRQ | Bit 4<br>Poll status register rather than waiting for INTRQ. Setting this bit to 1 improves USB BOT test results but may introduce compatibility problems with some devices.<br>0 = Wait for INTRQ.<br>1 = Poll status register instead of using INTRQ. | | |
| | BUSY Bit Delay | Bit 3<br>Enable a delay of up to 120 ms at each read of the DRQ bit where the device data length does not match the host data length. This enables the CY7C68300C/CY7C68301C to work with most devices that incorrectly clear the BUSY bit before a valid status is present.<br>0 = No BUSY bit delay.<br>1 = Use BUSY bit delay. | | |
| | Short Packet Before Stall | Bit 2<br>Determines if a short packet is sent before the STALL of an IN endpoint. The USB *Mass Storage Class Bulk-Only Specification* enables a device to send a short or zero-length IN packet before returning a STALL handshake for certain cases. Certain host controller drivers may require a short packet before STALL.<br>0 = Do not force a short packet before STALL.<br>1 = Force a short packet before STALL. | | |



[+] Feedback

**Table 11. Configuration Data Organization** (continued)

| Byte Address | Configuration Item Name | Configuration Item Description | Required Contents | Variable Contents |
|---|---|---|---|---|
| | SRST Enable | Bit 1<br>Determines if the AT2LP is to do an SRST reset during drive initialization. At least one reset must be enabled. Do not set SRST to 0 and Skip Pin Reset to 1 at the same time.<br>0 = Do not perform SRST during initialization.<br>1 = Perform SRST during initialization. | | |
| | Skip Pin Reset | Bit 0<br>Skip ARESET# assertion. When this bit is set, the AT2LP bypasses ARESET# during any initialization other than power up. Do not set SRST Enable to 0 and Skip Pin Reset to 1 at the same time.<br>0 = Allow ARESET# assertion for all device resets.<br>1 = Disable ARESET# assertion except for chip reset cycles. | | |
| 0x06 | ATA UDMA Enable | Bit 7<br>Enable Ultra DMA data transfer support for ATA devices. If enabled, and if the ATA device reports UDMA support for the indicated modes, the AT2LP uses UDMA data transfers at the highest negotiated rate possible.<br>0 = Disable ATA device UDMA support.<br>1 = Enable ATA device UDMA support. | | 0xD4 |
| | ATAPI UDMA Enable | Bit 6<br>Enable Ultra DMA data transfer support for ATAPI devices. If enabled, and if the ATAPI device reports UDMA support for the indicated modes, the AT2LP uses UDMA data transfers at the highest negotiated rate possible.<br>0 = Disable ATAPI device UDMA support.<br>1 = Enable ATAPI device UDMA support. | | |
| | UDMA Modes | Bits 5:0<br>These bits select which UDMA modes are enabled. The AT2LP operates in the highest enabled UDMA mode supported by the device. The AT2LP supports UDMA modes 2, 3, and 4 only.<br>Bit 5 = Reserved. Must be set to 0.<br>Bit 4 = Enable UDMA mode 4.<br>Bit 3 = Enable UDMA mode 3.<br>Bit 2 = Enable UDMA mode 2.<br>Bit 1 = Reserved. Must be set to 0.<br>Bit 0 = Reserved. Must be set to 0. | | |
| 0x07 | Reserved | Bits 7:3<br>Must be set to 0. | | 0x07 |
| | Multi-word DMA mode | Bit 2<br>This bit enables multi-word DMA support. If this bit is set and the drive supports it, multi-word DMA is used. | | |
| | PIO Modes | Bits 1:0<br>These bits select which PIO modes are enabled. Setting to '1' enables use of that mode with the attached drive, if the drive supports it. Multiple bits may be set. The AT2LP operates in the highest enabled PIO mode supported by the device. The AT2LP supports PIO modes 0, 3, and 4 only. PIO mode 0 is always enabled and has no corresponding configuration bit.<br>Bit 1 = Enable PIO mode 4.<br>Bit 0 = Enable PIO mode 3. | | |



[+] Feedback

**Table 11. Configuration Data Organization** (continued)

| Byte Address | Configuration Item Name | Configuration Item Description | Required Contents | Variable Contents |
|---|---|---|---|---|
| 0x08 | BUTTON_MODE | Bit 7<br>Button mode (100-pin package only). Sets ATAPUEN, PWR500# and DRVPWRVLD to become button inputs returned on bits 2, 1, and 0 of EP1IN. This bit must be set to '0' if the 56-pin packages are used.<br>0 = Disable button mode.<br>1 = Enable button mode. | | 0x78 |
| | SEARCH_ATA_BUS | Bit 6<br>Search ATA bus after RESET to detect non-removable ATA and ATAPI devices. Systems with only a removable device (such as CF readers) must set this bit to '0'. Systems with at least one non-removable device must set this bit to '1'.<br>0 = Do not search for ATA devices.<br>1 = Search for ATA devices. | | |
| | BIG_PACKAGE | Bit 5<br>Selects the 100- or 56-pin package pinout configuration. Using the wrong pinout may result in unpredictable behavior.<br>0 = Use 56-pin package pinout.<br>1 = Use 100-pin package pinout. | | |
| | ATA_EN | Bit 4<br>Drive ATA bus when AT2LP is in suspend. For designs in which the ATA bus is shared between the AT2LP and another ATA master (such as an MP3 player), the AT2LP can place the ATA interface pins in a Hi-Z state when it enters suspend. For designs that do not share the ATA bus, the ATA signals must be driven while the AT2LP is in suspend to avoid floating signals.<br>0 = Drive ATA signals when AT2LP is in suspend.<br>1 = Set ATA signals to Hi-Z when AT2LP is in suspend. | | |
| | Reserved | Bit 3<br>Reserved. This bit must be set to '0'. | | |
| | Reserved | Bit 2<br>Reserved. This bit must be set to '0' | | |
| | Drive Power Valid Polarity | Bit 1<br>Configure the logical polarity of the DRVPWRVLD input pin.<br>0 = Active LOW ('connector ground' indication)<br>1 = Active HIGH (power indication from device) | | |
| | Drive Power Valid Enable | Bit 0<br>Enable the DRVPWRVLD pin. When this pin is enabled, the AT2LP enumerates a removable ATA device, such as CompactFlash or MicroDrive, as the IDE master device. Enabling this pin also affects other pins related to removable device operation.<br>0 = Disable removable ATA device support.<br>1 = Enable removable ATA device support. | | |



[+] Feedback

**Table 11. Configuration Data Organization** (continued)

| Byte Address | Configuration Item Name | Configuration Item Description | Required Contents | Variable Contents |
|---|---|---|---|---|
| 0x09 | Reserved<br><br>General Purpose I/O Pin Output Enable | Bits 7:6<br>Reserved. Must be set to zero.<br>Bits 5:0<br>GPIO[5:0] Input and output control. GPIOs can be individually set as inputs or outputs using these bits.<br>0 = Hi-Z (pin is an input). The state of the signal connected to GPIO input pins is reported in the SYSIRQ or HID data.<br>1 = Output enabled (pin is an output). The state of GPIO output pins is controlled by the value in address 0x0A. | | 0x00 |
| 0x0A | Reserved<br><br>GPIO Output Pin State | Bits 7:6<br>Reserved. Must be set to zero.<br>Bits 5:0<br>These bits select the value driven on the GPIO pins that are configured as outputs in configuration address 0x09.<br>0 = Drive the GPIO pin LOW<br>1 = Drive the GPIO pin HIGH | | 0x00 |
| 0x0B | LUN0 Identify String | This byte is a pointer to the start of a 24 byte ASCII (non-Unicode) string in the EEPROM that is used as the LUN0 device identifier. This string is used by many operating systems as the user-visible name for the drive. If this byte is 0x00, the Identify Device data from the drive is used instead. | | 0x00 |
| 0x0C | LUN1 Identify String | This byte is a pointer to the start of a 24 byte ASCII (non-Unicode) string in the EEPROM that is used as the LUN1 device identifier. This string is used by many operating systems as the user-visible name for the drive. If this byte is 0x00, the Identify Device data from the drive is used instead. | | 0x00 |
| 0x0D | Delay After Reset | Number of 20-ms ticks to wait between AT2LP startup or reset, and the first attempt to access any drives. | | 0x00 |
| 0x0E | Reserved<br><br>Bus-Powered Flag<br><br><br><br><br>CF UDMA Enable<br><br><br><br><br><br>Fixed Number of Logical | Bits 7:5<br>Must be set to zero.<br>Bit 4<br>Enable bus-powered HDD support. This bit enables the use of DRVPWRVLD features without reporting the LUN0 device as removable media.<br>0 = LUN0 is removable media or DRVPWRVLD is disabled<br>1 = LUN0 device is bus-powered and non-removable<br>Bit 3<br>Enable UDMA transfers for removable devices. Some CF devices interfere with UDMA transfers when more than one drive is connected to the ATA bus.<br>0 = Do not use UDMA transfers with removable devices (UDMA signals are not connected to the CF pins).<br>1 = Allow UDMA transfers to be used with removable devices (UDMA signals are connected to the CF pins).<br>Bits 2:1<br>Assume the presence of devices and do not perform a search of the ATA bus to discover the number of LUNs.<br>00 = Search ATA bus and determine number of LUNs<br>01 = Assume only LUN0 present; no ATA bus search<br>10 = Assume LUN0 and LUN1 present; no ATA bus search<br>11 = Assume LUN0 and LUN1 present; no ATA bus search | | 0x00 |



[+] Feedback

**Table 11. Configuration Data Organization** (continued)

| Byte Address | Configuration Item Name | Configuration Item Description | Required Contents | Variable Contents |
|---|---|---|---|---|
| | Search ATA on VBUS | Bit 0<br>Search for ATA devices when VBUS returns. If this bit is set, the ATA bus is searched for ATA devices every time VBUS_ATA_ENABLE is asserted. This feature enables the AT2LP to be used in designs where the drive may be physically removed (such as docking stations or port replicators).<br>0 = Search ATA bus on VBUS_ATA_ENABLE assertion<br>1 = No ATA bus search on VBUS_ATA_ENABLE assertion | | |
| 0x0F | Reserved | Must be set to 0x00 | 0x00 | |
| **Device Descriptor** | | | | |
| 0x10 | bLength | Length of device descriptor in bytes | 0x12 | |
| 0x11 | bDescriptor Type | Descriptor type. | 0x01 | |
| 0x12 | bcdUSB (LSB) | USB Specification release number in BCD | 0x00 | |
| 0x13 | bcdUSB (MSB) | | 0x02 | |
| 0x14 | bDeviceClass | Device class | 0x00 | |
| 0x15 | bDeviceSubClass | Device subclass | 0x00 | |
| 0x16 | bDeviceProtocol | Device protocol | 0x00 | |
| 0x17 | bMaxPacketSize0 | USB packet size supported for default pipe | 0x40 | |
| 0x18 | idVendor (LSB) | Vendor ID. Cypress' Vendor ID may only be used for evaluation purposes, and not in released products. | | Your Vendor ID |
| 0x19 | idVendor (MSB) | | | |
| 0x1A | idProduct (LSB) | Product ID | | Your Product ID |
| 0x1B | idProduct (MSB) | | | |
| 0x1C | bcdDevice (LSB) | Device release number in BCD LSB (product release number) | | Your release number |
| 0x1D | bcdDevice (MSB) | Device release number in BCD MSB (silicon release number) | | |
| 0x1E | iManufacturer | Index to manufacturer string. This entry must equal half of the address value where the string starts or 0x00 if the string does not exist. | | 0x53 |
| 0x1F | iProduct | Index to product string. This entry must equal half of the address value where the string starts or 0x00 if the string does not exist. | | 0x69 |
| 0x20 | iSerialNumber | Index to serial number string. This entry must equal half of the address value where the string starts or 0x00 if the string does not exist. The USB *Mass Storage Class Bulk-Only Transport Specification* requires a unique serial number (in upper case, hexadecimal characters) for each device. | | 0x75 |
| 0x21 | bNumConfigurations | Number of configurations supported<br>1 for mass storage: 2 for HID: 3 for CSM | | 0x03 |
| **Device Qualifier** | | | | |
| 0x22 | bLength | Length of device descriptor in bytes | 0x0A | |
| 0x23 | bDescriptor | Type Descriptor type | 0x06 | |
| 0x24 | bcdUSB (LSB) | USB Specification release number in BCD | 0x00 | |
| 0x25 | bcdUSB (MSB) | USB Specification release number in BCD | 0x02 | |
| 0x26 | bDeviceClass | Device class | 0x00 | |
| 0x27 | bDeviceSubClass | Device subclass | 0x00 | |
| 0x28 | bDeviceProtocol | Device protocol | 0x00 | |



[+] Feedback

**Table 11. Configuration Data Organization** (continued)

| Byte Address | Configuration Item Name | Configuration Item Description | Required Contents | Variable Contents |
|---|---|---|---|---|
| 0x29 | bMaxPacketSize0 | USB packet size supported for default pipe | 0x40 | |
| 0x2A | bNumConfigurations | Number of configurations supported | 0x01 | |
| 0x2B | bReserved | Reserved for future use. Must be set to zero | 0x00 | |
| **Configuration Descriptor** | | | | |
| 0x2C | bLength | Length of configuration descriptor in bytes | 0x09 | |
| 0x2D | bDescriptorType | Descriptor type | 0x02 | |
| 0x2E | bTotalLength (LSB) | Number of bytes returned in this configuration. This includes the configuration descriptor plus all the interface and endpoint descriptors. | | 0x20 |
| 0x2F | bTotalLength (MSB) | | | 0x00 |
| 0x30 | bNumInterfaces | Number of interfaces supported | | 0x01 |
| 0x31 | bConfiguration Value | The value to use as an argument to Set Configuration to select the configuration. This value must be set to 0x01. | 0x01 | |
| 0x32 | iConfiguration | Index to the configuration string. This entry must equal half of the address value where the string starts, or 0x00 if the string does not exist. | | 0x00 |
| 0x33 | bmAttributes | Device attributes for this configuration<br>Bit 7 Reserved. Must be set to 1<br>Bit 6 Self-powered. See Table 4 for reported value<br>Bit 5 Remote wakeup. Must be set to 0<br>Bits 4–0 Reserved. Must be set to 0 | | 0xC0 |
| 0x34 | bMaxPower | Maximum power consumption for this configuration. Units used are mA*2 (i.e., 0x31 = 98 mA, 0xF9 = 498 mA). The value entered here is only used by the 56-pin packages and affect the reported value of bit 6 of address 0x33 in that case. See Table 4 on page 14 for a description of what value is reported to the host by the AT2LP. | | 0x01 |
| **Interface and Endpoint Descriptors** | | | | |
| *Interface Descriptor* | | | | |
| 0x35 | bLength | Length of interface descriptor in bytes | 0x09 | |
| 0x36 | bDescriptorType | Descriptor type | 0x04 | |
| 0x37 | bInterfaceNumber | Interface number | 0x00 | |
| 0x38 | bAlternateSetting | Alternate setting | 0x00 | |
| 0x39 | bNumEndpoints | Number of endpoints | | 0x02 |
| 0x3A | bInterfaceClass | Interface class | 0x08 | |
| 0x3B | bInterfaceSubClass | Interface subclass | | 0x06 |
| 0x3C | bInterfaceProtocol | Interface protocol | 0x50 | |
| 0x3D | iInterface | Index to first interface string. This entry must equal half of the address value where the string starts or 0x00 if the string does not exist. | | 0x00 |
| *USB Bulk Out Endpoint* | | | | |
| 0x3E | bLength | Length of this descriptor in bytes | 0x07 | |
| 0x3F | bDescriptorType | Endpoint descriptor type | 0x05 | |
| 0x40 | bEndpointAddress | This is an Out endpoint, endpoint number 2. | 0x02 | |
| 0x41 | bmAttributes | This is a bulk endpoint. | 0x02 | |
| 0x42 | wMaxPacketSize (LSB) | Max data transfer size. To be set by speed (Full speed 0x0040; High speed 0x0200) | | 0x00 |
| 0x43 | wMaxPacketSize (MSB) | | | 0x02 |



[+] Feedback

**Table 11. Configuration Data Organization** (continued)

| Byte Address | Configuration Item Name | Configuration Item Description | Required Contents | Variable Contents |
|---|---|---|---|---|
| 0x44 | bInterval | High speed interval for polling (maximum NAK rate) | 0x00 | |
| *USB Bulk In Endpoint* | | | | |
| 0x45 | bLength | Length of this descriptor in bytes | 0x07 | |
| 0x46 | bDescriptorType | Endpoint descriptor type | 0x05 | |
| 0x47 | bEndpointAddress | This is an In endpoint, endpoint number 6 | 0x86 | |
| 0x48 | bmAttributes | This is a bulk endpoint | 0x02 | |
| 0x49 | wMaxPacketSize (LSB) | Max data transfer size. Automatically set by AT2 (Full speed 0x0040; High speed 0x0200) | | 0x00 |
| 0x4A | wMaxPacketSize (MSB) | | | 0x02 |
| 0x4B | bInterval | High speed interval for polling (maximum NAK rate) | 0x00 | |
| **(Optional) HID Interface Descriptor** | | | | |
| 0x4C | bLength | Length of HID interface descriptor | | 0x09 |
| 0x4D | bDescriptorTypes | Interface descriptor type | | 0x04 |
| 0x4E | bInterfaceNumber | Number of interfaces (2) | | 0x02 |
| 0x4F | bAlternateSetting | Alternate setting | | 0x00 |
| 0x50 | bNumEndpoints | Number of endpoints used by this interface | | 0x01 |
| 0x51 | bInterfaceClass | Class code | | 0x03 |
| 0x52 | bInterfaceSubClass | Sub class | | 0x00 |
| 0x53 | bInterfaceSubSubClass | Sub Sub class | | 0x00 |
| 0x54 | iInterface | Index of string descriptor | | 0x00 |
| **USB Interrupt In Endpoint** | | | | |
| 0x5E | bLength | Length of this descriptor in bytes | 0x07 | |
| 0x5F | bDescriptorType | Endpoint descriptor type | 0x05 | |
| 0x60 | bEndpointAddress | This is an In endpoint, endpoint number 1 | 0x81 | |
| 0x61 | bmAttributes | This is an interrupt endpoint | 0x03 | |
| 0x62 | wMaxPacketSize (LSB) | Max data transfer size | 0x02 | |
| 0x63 | wMaxPacketSize (MSB) | | 0x00 | |
| 0x64 | bInterval | Interval for polling (max. NAK rate) | | 0x10 |
| **(Optional) HID Descriptor** | | | | |
| 0x55 | bLength | Length of HID descriptor | | 0x09 |
| 0x56 | bDescriptorType | Descriptor Type HID | | 0x21 |
| 0x57 | bcdHID (LSB) | HID Class Specification release number (1.10) | | 0x10 |
| 0x58 | bcdHID (MSB) | | | 0x01 |
| 0x59 | bCountryCode | Country Code | | 0x00 |
| 0x5A | bNumDescriptors | Number of class descriptors (1 report descriptor) | | 0x01 |
| 0x5B | bDescriptorType | Descriptor Type | | 0x22 |
| 0x5C | wDescriptorLength (LSB) | Length of HID report descriptor | | 0x22 |
| 0x5D | wDescriptorLength (MSB) | | | 0x00 |
| **Terminator Descriptors** | | | | |
| 0x65 | Terminator | | 0x00 | |
| **(Optional) HID Report Descriptor** | | | | |



[+] Feedback

**Table 11. Configuration Data Organization** (continued)

| Byte Address | Configuration Item Name | Configuration Item Description | Required Contents | Variable Contents |
|---|---|---|---|---|
| 0x66 | Usage_Page | Vendor defined | | 0x06 |
| 0x67 | | | | 0xA0 |
| 0x68 | | | | 0xFF |
| 0x69 | Usage | Vendor defined | | 0x09 |
| 0x6A | | | | 0xA5 |
| 0x6B | Collection | Application | | 0xA1 |
| 0x6C | | | | 0x01 |
| 0x6D | Usage | Vendor defined | | 0x09 |
| 0x6E | | | | 0xA6 |
| **Input Report** | | | | |
| 0x6F | Usage | Vendor defined | | 0x09 |
| 0x70 | | | | 0xA7 |
| 0x71 | Logical_Minimum | –128 | | 0x15 |
| 0x72 | | | | 0x80 |
| 0x73 | Logical_Maximum | 127 | | 0x25 |
| 0x74 | | | | 0x7F |
| 0x75 | Report_Size | 8 bits | | 0x75 |
| 0x76 | | | | 0x08 |
| 0x77 | Report_Count | 2 fields | | 0x95 |
| 0x78 | | | | 0x02 |
| 0x79 | Input | Input (Data, Variable, Absolute) | | 0x81 |
| 0x7A | | | | 0x02 |
| **Output Report** | | | | |
| 0x7B | Usage | Usage - vendor defined | | 0x09 |
| 0x7C | | | | 0xA9 |
| 0x7D | Logical_Minimum | Logical Minimum (–128) | | 0x15 |
| 0x7E | | | | 0x80 |
| 0x7F | Logical_Maximum | Logical Maximum (127) | | 0x25 |
| 0x80 | | | | 0x7F |
| 0x81 | Report_Size | Report Size 8 bits | | 0x75 |
| 0x82 | | | | 0x08 |
| 0x83 | Report_Count | Report Count 2 fields | | 0x95 |
| 0x84 | | | | 0x02 |
| 0x85 | Output | Output (Data, Variable, Absolute) | | 0x91 |
| 0x86 | | | | 0x02 |
| 0x87 | | End Collection | | 0xC0 |
| **(optional) Standard Content Security Interface Descriptor** | | | | |
| 0x88 | bLength | Byte length of this descriptor | | 0x09 |
| 0x89 | bDescriptorType | Interface Descriptor type | | 0x0D |
| 0x8A | bInterfaceNumber | Number of interface | | 0x02 |
| 0x8B | bAlternateSetting | Value used to select an alternate setting for the interface identified in prior field | | 0x00 |



[+] Feedback

**Table 11. Configuration Data Organization** (continued)

| Byte Address | Configuration Item Name | Configuration Item Description | Required Contents | Variable Contents |
|---|---|---|---|---|
| 0x8C | bNumEndpoints | Number of endpoints used by this interface (excluding endpoint 0) that are CSM dependent | | 0x02 |
| 0x8D | bInterfaceClass | | | 0x0D |
| 0x8E | bInterfaceSubClass | Must be set to zero | | 0x00 |
| 0x8F | bInterfaceProtocol | Must be set to zero | | 0x00 |
| 0x90 | iInterface | Index of a string descriptor that describes this Interface | | 0x00 |
| **Channel Descriptor** | | | | |
| 0x91 | bLength | Length of this descriptor in bytes | | 0x09 |
| 0x92 | bDescriptorType | Channel descriptor type | | 0x22 |
| 0x93 | bChannelID | Number of the channel, must be a zero based value that is unique across the device | | 0x00 |
| 0x94 | bmAttributes | Bits7:5<br>Reserved. Must be set to zero<br>Bits 4:0 | | 0x01 |
| 0x95 | bRecipient | Identifier of the target recipient<br>If Recipient type field of bmAttributes = 1 then bRecipient field is the bInterfaceNumber<br>If Recipient type field of bmAttributes = 2 then bRecipient field is an endpoint address, where:<br>D7: Direction (0 = Out, 1 = IN)<br>D6...D4: Reserved and set to zero<br>D3...D0: Endpoint number | | 0x00 |
| 0x96 | bRecipientAlt | alternate setting for the interface to which this channel applies | | 0x00 |
| 0x97 | bRecipientLogicalUnit | Recipient Logical Unit | | 0x00 |
| 0x98 | bMethod | Index of a class-specific CSM descriptor That describes one of the Content Security Methods (CSM) offered by the device | | 0x01 |
| 0x99 | bMethodVariant | CSM Variant descriptor | | 0x00 |
| **CSM Descriptor** | | | | |
| 0x9A | bLength | Byte length of this descriptor | | 0x06 |
| 0x9B | bDescriptorType | CSM Descriptor type | | 0x23 |
| 0x9C | bMethodID | Index of a class-specific CSM descriptor that describes on of the Content Security Methods offered by the device | | 0x01 |
| 0x9D | iCSMDescriptor | Index of string descriptor that describes the Content Security Method | | 0x00 |
| 0x9E | bcdVersion (LSB) | CSM Descriptor Version number | | 0x10 |
| 0x9F | bcsVersion (MSB) | | | 0x02 |
| 0xA0 | Terminator | | 0x00 | |
| **USB String Descriptor–Index 0 (LANGID)** | | | | |
| 0xA1 | bLength | LANGID string descriptor length in bytes | 0x04 | |
| 0xA2 | bDescriptorType | Descriptor type | 0x03 | |
| 0xA3 | LANGID (LSB) | Language supported. The CY7C68300B supports one LANGID value. | | 0x09 |
| 0xA4 | LANGID (MSB) | | | 0x04 |
| **USB String Descriptor–Manufacturer** | | | | |
| 0xA5 | bLength | String descriptor length in bytes (including bLength) | | 0x2C |
| 0xA6 | bDescriptorType | Descriptor type | 0x03 | |



[+] Feedback

**Table 11. Configuration Data Organization** (continued)

| Byte Address | Configuration Item Name | Configuration Item Description | Required Contents | Variable Contents |
|---|---|---|---|---|
| 0xA7 | bString | Unicode character LSB | | 'C' 0x43 |
| 0xA8 | bString | Unicode character MSB | | 0x00 |
| 0xA9 | bString | Unicode character LSB | | 'y' 0x79 |
| 0xAA | bString | Unicode character MSB | | 0x00 |
| 0xAB | bString | Unicode character LSB | | 'p' 0x70 |
| 0xAC | bString | Unicode character MSB | | 0x00 |
| 0xAD | bString | Unicode character LSB | | 'r' 0x72 |
| 0xAE | bString | Unicode character MSB | | 0x00 |
| 0xAF | bString | Unicode character LSB | | 'e' 0x65 |
| 0xB0 | bString | Unicode character MSB | | 0x00 |
| 0xB1 | bString | Unicode character LSB | | 's' 0x73 |
| 0xB2 | bString | Unicode character MSB | | 0x00 |
| 0xB3 | bString | Unicode character LSB | | 's' 0x73 |
| 0xB4 | bString | Unicode character MSB | | 0x00 |
| 0xB5 | bString | Unicode character LSB | | ' ' 0x20 |
| 0xB6 | bString | Unicode character MSB | | 0x00 |
| 0xB7 | bString | Unicode character LSB | | 'S' 0x53 |
| 0xB8 | bString | Unicode character MSB | | 0x00 |
| 0xB9 | bString | Unicode character LSB | | 'e' 0x65 |
| 0xBA | bString | Unicode character MSB | | 0x00 |
| 0xBB | bString | Unicode character LSB | | 'm' 0x6D |
| 0xBC | bString | Unicode character MSB | | 0x00 |
| 0xBD | bString | Unicode character LSB | | 'i' 0x69 |
| 0xBE | bString | Unicode character MSB | | 0x00 |
| 0xBF | bString | Unicode character LSB | | 'c' 0x63 |
| 0xC0 | bString | Unicode character MSB | | 0x00 |
| 0xC1 | bString | Unicode character LSB | | 'o' 0x6F |
| 0xC2 | bString | Unicode character MSB | | 0x00 |
| 0xC3 | bString | Unicode character LSB | | 'n' 0x6E |
| 0xC4 | bString | Unicode character MSB | | 0x00 |
| 0xC5 | bString | Unicode character LSB | | 'd' 0x64 |
| 0xC6 | bString | Unicode character MSB | | 0x00 |
| 0xC7 | bString | Unicode character LSB | | 'u' 0x75 |
| 0xC8 | bString | Unicode character MSB | | 0x00 |
| 0xC9 | bString | Unicode character LSB | | 'c' 0x63 |
| 0xCA | bString | Unicode character MSB | | 0x00 |
| 0xCB | bString | Unicode character LSB | | 't' 0x74 |
| 0xCC | bString | Unicode character MSB | | 0x00 |
| 0xCD | bString | Unicode character LSB | | 'o' 0x6F |
| 0xCE | bString | Unicode character MSB | | 0x00 |
| 0xCF | bString | Unicode character LSB | | 'r' 0x72 |
| 0xD0 | bString | Unicode character MSB | | 0x00 |



[+] Feedback

**Table 11. Configuration Data Organization** (continued)

| Byte Address | Configuration Item Name | Configuration Item Description | Required Contents | Variable Contents |
|---|---|---|---|---|
| **USB String Descriptor–Product** | | | | |
| 0xD1 | bLength | String descriptor length in bytes (including bLength) | | 0x2C |
| 0xD2 | bDescriptorType | Descriptor type. | 0x03 | |
| 0xD3 | bString | Unicode character LSB | | 'U' 0x55 |
| 0xD4 | bString | Unicode character MSB | | 0x00 |
| 0xD5 | bString | Unicode character LSB | | 'S' 0x53 |
| 0xD6 | bString | Unicode character MSB | | 0x00 |
| 0xD7 | bString | Unicode character LSB | | 'B' 0x42 |
| 0xD8 | bString | Unicode character MSB | | 0x00 |
| 0xD9 | bString | Unicode character LSB | | '2' 0x32 |
| 0xDA | bString | Unicode character MSB | | 0x00 |
| 0xDB | bString | Unicode character LSB | | '.' 0x2E |
| 0xDC | bString | Unicode character MSB | | 0x00 |
| 0xDD | bString | Unicode character LSB | | '0' 0x30 |
| 0xDE | bString | Unicode character MSB | | 0x00 |
| 0xDF | bString | Unicode character LSB | | ' ' 0x20 |
| 0xE0 | bString | Unicode character MSB | | 0x00 |
| 0xE1 | bString | Unicode character LSB | | 'D' 0x53 |
| 0xE2 | bString | Unicode character MSB | | 0x00 |
| 0xE3 | bString | Unicode character LSB | | 'i' 0x74 |
| 0xE4 | bString | Unicode character MSB | | 0x00 |
| 0xE5 | bString | Unicode character LSB | | 's' 0x6F |
| 0xE6 | bString | Unicode character MSB | | 0x00 |
| 0xE7 | bString | Unicode character LSB | | 'k' 0x72 |
| 0xE8 | bString | Unicode character MSB | | 0x00 |
| **USB String Descriptor–Serial Number** (**Note**: The USB Mass Storage Class specification requires a unique serial number in each device. If you do not provide a unique serial number, the operating system may crash. The serial number must be at least 12 characters, but some USB hosts only use the least significant 12 characters of the serial number as a unique identifier. | | | | |
| 0xE9 | bLength | String descriptor length in bytes (including bLength). | | 0x22 |
| 0xEA | bDescriptor Type | Descriptor type. | 0x03 | |
| 0XEB | bString | Unicode character LSB | | '1' 0x31 |
| 0XEC | bString | Unicode character MSB | | 0x00 |
| 0XED | bString | Unicode character LSB | | '2' 0x32 |
| 0XEE | bString | Unicode character MSB | | 0x00 |
| 0XEF | bString | Unicode character LSB | | '3' 0x33 |
| 0XF0 | bString | Unicode character MSB | | 0x00 |
| 0xF1 | bString | Unicode character LSB | | '4' 0x34 |
| 0xF2 | bString | Unicode character MSB | | 0x00 |
| 0xF3 | bString | Unicode character LSB | | '5' 0x35 |
| 0xF4 | bString | Unicode character MSB | | 0x00 |
| 0xF5 | bString | Unicode character LSB | | '6' 0x36 |
| 0xF6 | bString | Unicode character MSB | | 0x00 |
| 0xF7 | bString | Unicode character LSB | | '7' 0x37 |



[+] Feedback

**Table 11. Configuration Data Organization** (continued)

| Byte Address | Configuration Item Name | Configuration Item Description | Required Contents | Variable Contents |
|---|---|---|---|---|
| 0xF8 | bString | Unicode character MSB | | 0x00 |
| 0xF9 | bString | Unicode character LSB | | '8' 0x38 |
| 0xFA | bString | Unicode character MSB | | 0x00 |
| 0xFB | bString | Unicode character LSB | | '9' 0x39 |
| 0xFC | bString | Unicode character MSB | | 0x00 |
| 0xFD | bString | Unicode character LSB | | '0' 0x30 |
| 0xFE | bString | Unicode character MSB | | 0x00 |
| 0xFF | bString | Unicode character LSB | | 'A' 0x41 |
| 0Xxx | bString | Unicode character MSB | | 0x00 |
| 0Xxx | bString | Unicode character LSB | | 'B' 0x42 |
| 0Xxx | bString | Unicode character MSB | | 0x00 |
| **Identify Device String** (**Note**: This is not a Unicode string. It is the ASCII string returned by the device in the Identify Device information. It is a fixed length (24 bytes). Changing this string may cause CD authoring software to incorrectly identify the device.) | | | | |
| 0Xxx | Device name byte 1 | ASCII Character | | 'C' 0x43 |
| 0Xxx | Device name byte 2 | ASCII Character | | 'y' 0x79 |
| 0Xxx | Device name byte 3 | ASCII Character | | 'p' 0x70 |
| 0Xxx | Device name byte 4 | ASCII Character | | 'r' 0x72 |
| 0Xxx | Device name byte 5 | ASCII Character | | 'e' 0x65 |
| 0Xxx | Device name byte 6 | ASCII Character | | 's' 0x73 |
| 0Xxx | Device name byte 7 | ASCII Character | | 's' 0x73 |
| 0Xxx | Device name byte 8 | ASCII Character | | ' ' 0x20 |
| 0Xxx | Device name byte 9 | ASCII Character | | 'C' 0x43 |
| 0Xxx | Device name byte 10 | ASCII Character | | 'u' 0x75 |
| 0Xxx | Device name byte 11 | ASCII Character | | 's' 0x73 |
| 0Xxx | Device name byte 12 | ASCII Character | | 't' 0x74 |
| 0Xxx | Device name byte 13 | ASCII Character | | 'o' 0x6f |
| 0Xxx | Device name byte 14 | ASCII Character | | 'm' 0x6d |
| 0Xxx | Device name byte 15 | ASCII Character | | ' ' 0x20 |
| 0Xxx | Device name byte 16 | ASCII Character | | 'N' 0x4e |
| 0Xxx | Device name byte 17 | ASCII Character | | 'a' 0x61 |
| 0Xxx | Device name byte 18 | ASCII Character | | 'm' 0x6d |
| 0Xxx | Device name byte 19 | ASCII Character | | 'e' 0x65 |
| 0Xxx | Device name byte 20 | ASCII Character | | ' ' 0x20 |
| 0Xxx | Device name byte 21 | ASCII Character | | 'L' 0x4c |
| 0Xxx | Device name byte 22 | ASCII Character | | 'U' 0x55 |
| 0Xxx | Device name byte 23 | ASCII Character | | 'N' 0x4e |
| 0Xxx | Device name byte 24 | ASCII Character | | '0' 0x30 |
| 0Xxx | Unused ROM Space | Amount of unused ROM space varies depending on strings. | | 0xFF |

**Note**: More than 0X100 bytes of configuration are shown for example only. The AT2LP only supports addresses up to 0xFF.



[+] Feedback

## Programming the EEPROM

There are three methods of programming the EEPROM:

- Stand-alone EEPROM programmer
- Vendor-specific USB commands, listed in Table 12
- In-system programming (for example, bed-of-nails tester)

Any vendor-specific USB write request to the Serial ROM device configuration space simultaneously update internal configuration register values as well. If the $I^2C$ device is programmed without vendor specific USB commands, the AT2LP must be synchronously reset (toggle RESET#) before configuration data is reloaded.

The AT2LP supports a subset of the 'slow mode' specification (100 KHz) required for 24LCXXB EEPROM family device support. Features such as 'Multi-Master,' 'Clock Synchronization' (the SCL pin is output only), '10-bit addressing,' and 'CBUS device support' are not supported. Vendor-specific USB commands enable the AT2LP to address up to 256 bytes of EEPROM data.

*LOAD_CONFIG_DATA*

This request enables writes to the AT2LP's configuration data space. The wIndex field specifies the starting address and the wLength field denotes the data length in bytes.

Legal values for wValue are as follows:

- 0x0000 Internal Config bytes, address range 0x2 – 0xF
- 0x0002 External $I^2C$ memory device

Internal Config byte writes must be constrained to addresses 0x2 through 0xF, as shown in Table 12. Attempts to write outside this address space result in undefined operation. Internal Config byte writes only overwrite AT2LP Configuration Byte registers, the original data source ($I^2C$ memory device) remains unchanged.

**Table 12. EEPROM-related Vendor-specific Commands**

| Label | bmRequestType | bRequest | wValue | wIndex | wLength | Data |
|---|---|---|---|---|---|---|
| LOAD_CONFIG_DATA | 0x40 | 0x01 | 0x0000 | 30x02 – 0x0F | Data Length | Configuration Data |
| READ_CONFIG_DATA | 0xC0 | 0x02 | Data Source | Starting Address | Data Length | Configuration Data |

*READ_CONFIG_DATA*

This USB request enables data retrieval from the data source specified by the wValue field. Data is retrieved beginning at the address specified by the wIndex field (see Table 12). The wLength field denotes the length in bytes of data requested from the data source.

Legal values for wValue are as follows:

- 0x0000 Configuration bytes, addresses 0x0 – 0xF only
- 0x0002 External $I^2C$ memory device

Illegal values for wValue result in an undefined operation. Attempted reads from an $I^2C$ memory device when none is connected result in an undefined operation. Attempts to read configuration bytes with starting addresses greater than 0xF also, result in an undefined operation.



[+] Feedback

## Absolute Maximum Ratings

Exceeding maximum ratings may impair the useful life of the device. These user guidelines are not tested.

Storage Temperature ..... –65°C to +150°C

Ambient Temperature with Power Supplied..... 0°C to +70°C

Supply Voltage to Ground Potential.....–0.5V to +4.0V

DC Input Voltage to Any Input Pin ..... 5.25V

DC Voltage Applied to Outputs in Hi-Z State–0.5V to $V_{CC}$ + 0.5V

Power Dissipation..... 300 mW

Static Discharge Voltage..... > 2000V

Max Output Current Per I/O Port (D0-D7, D8-15, ATA control)..... 10 mA

## Operating Conditions

$T_A$ (Ambient Temperature Under Bias) ..... 0°C to +70°C

Supply Voltage.....+3.00V to +3.60V

Ground Voltage..... 0V

$F_{osc}$ (Oscillator or Crystal Frequency) .... 24 MHz ± 100 ppm, Parallel Resonant

## DC Characteristics

| Parameter | Description | Conditions | Min | Typ | Max | Unit |
|---|---|---|---|---|---|---|
| $V_{CC}$ | Supply Voltage | | 3.00 | 3.3 | 3.60 | V |
| $V_{CC}$ Ramp | Supply Ramp Up 0V to 3.3V | | 200 | | | µs |
| $V_{IH}$ | Input High Voltage | | 2 | | 5.25 | V |
| $V_{IL}$ | Input Low Voltage | | –0.5 | | 0.8 | V |
| $I_I$ | Input Leakage Current | $0 < V_{IH} < V_{CC}$ | | | ±10 | µA |
| $V_{IH_X}$ | Crystal Input HIGH Voltage | | 2 | | 5.25 | V |
| $V_{IL_X}$ | Crystal Input LOW Voltage | | –0.5 | | 0.8 | V |
| $V_{OH}$ | Output Voltage High | $I_{OUT}$ = 4 mA | 2.4 | | | V |
| $V_{OL}$ | Output Voltage Low | $I_{OUT}$ = –4 mA | | | 0.4 | V |
| $I_{OH}$ | Output Current High | | | | 4 | mA |
| $I_{OL}$ | Output Current Low | | | | 4 | mA |
| $C_{IN}$ | Input Pin Capacitance | All but DPLUS/DMINUS | | | 10 | pF |
| | | DPLUS/DMINUS | | | 15 | pF |
| $I_{SUSP}$ | Suspend Current CY7C68300C/CY7C68320C | Connected | | 0.5 | 1.2 | mA |
| | | Disconnected | | 0.3 | 1.0 | mA |
| | Suspend Current CY7C68301C/CY7C68321C | Connected | | 300 | 380 | µA |
| | | Disconnected | | 100 | 150 | µA |
| $I_{CC}$ | Supply Current | USB High Speed | | 50 | 85 | mA |
| | | USB Full Speed | | 35 | 65 | mA |
| $I_{UNCONFIG}$ | Unconfigured Current | Current before device is granted full amount requested in bMaxPower | | 43 | | mA |
| $T_{RESET}$ | Reset Time After Valid Power | $V_{CC}$ > 3.0V | 5.0 | | | ms |
| | Pin Reset After Power Up | | 200 | | | µs |

## AC Electrical Characteristics

### ATA Timing Characteristics

The ATA interface supports ATA PIO modes 0, 3, and 4, Ultra DMA modes 2, 3, and 4, and multi-word DMA mode 2, per the ATA/ATAPI 6 Specification. The highest enabled transfer rate common to both the AT2LP and the attached mass storage device is used. The AT2LP automatically determines the transfer rates during drive initialization based upon the values in the AT2LP configuration space and the data reported by the drives in response to an IDENTIFY DEVICE command.

### USB Transceiver Characteristics

Complies with the USB 2.0 specification for full- and high speed modes of operation.

## Ordering Information

| Part Number | Package Type | GPIO Pins |
|---|---|---|
| CY7C68300C-56PVXC | 56 SSOP Pb-free for self and bus powered designs | – |
| CY7C68301C-56PVXC | 56 SSOP Pb-free for battery-powered designs | – |
| CY7C68300C-56LFXC | 56 QFN Pb-free for self and bus powered designs | – |
| CY7C68300C-56LTXC | 56 QFN Sawn | – |
| CY7C68301C-56LFXC | 56 QFN Pb-free for battery-powered designs | – |
| CY7C68301C-56LTXC | 56 QFN Sawn | – |
| CY7C68320C-56LFXC | 56 QFN Pb-free for self and bus powered designs | 3[4] |
| CY7C68320C-56PVXC | 56 SSOP Pb-free for self and bus powered designs | 3[4] |
| CY7C68320C-56LTXC | 56 QFN Sawn | – |
| CY7C68321C-56LFXC | 56 QFN Pb-free for battery-powered designs | 3[4] |
| CY7C68321C-56LTXC | 56 QFN Sawn | – |
| CY7C68320C-100AXC | 100 TQFP Pb-free for self and bus powered designs | 6 |
| CY7C68321C-100AXC | 100 TQFP Pb-free for battery-powered designs | 6 |
| CY4615B | EZ-USB AT2LP Reference Design Kit | n/a |

**Note**
4. The General Purpose inputs can be enabled on ATAPUEN, PWR500#, and DRVPWRVLD with EEPROM byte 8, bit 7 on CY7C68320C/CY7C68321C.



[+] Feedback

## Package Diagrams

**Figure 12. 100-Pin Thin Plastic Quad Flatpack (14 x 20 x 1.4 mm) A101**

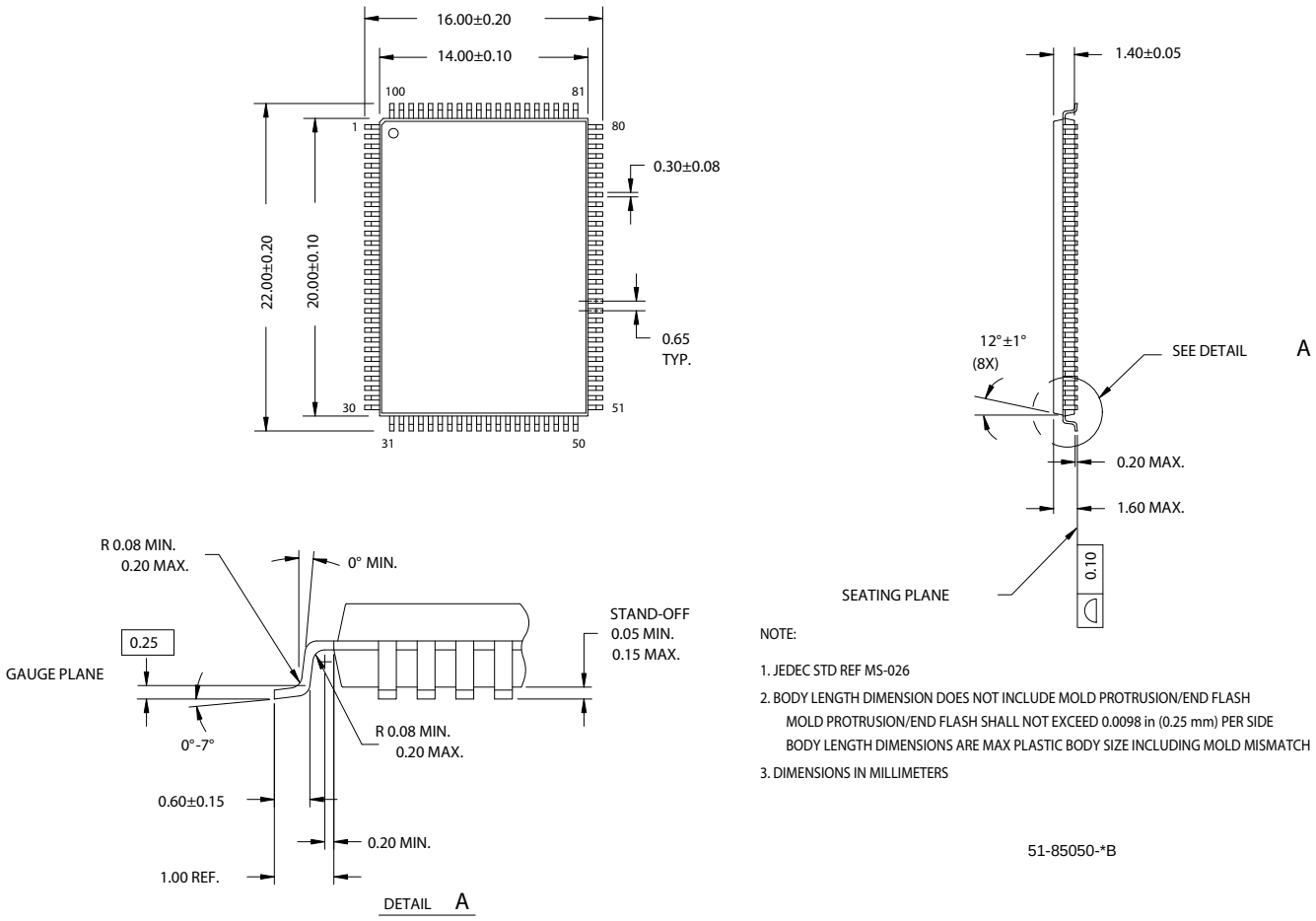


NOTE:

1. JEDEC STD REF MS-026
2. BODY LENGTH DIMENSION DOES NOT INCLUDE MOLD PROTRUSION/END FLASH
   MOLD PROTRUSION/END FLASH SHALL NOT EXCEED 0.0098 in (0.25 mm) PER SIDE
   BODY LENGTH DIMENSIONS ARE MAX PLASTIC BODY SIZE INCLUDING MOLD MISMATCH
3. DIMENSIONS IN MILLIMETERS

51-85050-*B



[+] Feedback

## Package Diagrams (continued)

**Figure 13. 56-Pin Shrunk Small Outline Package 056**

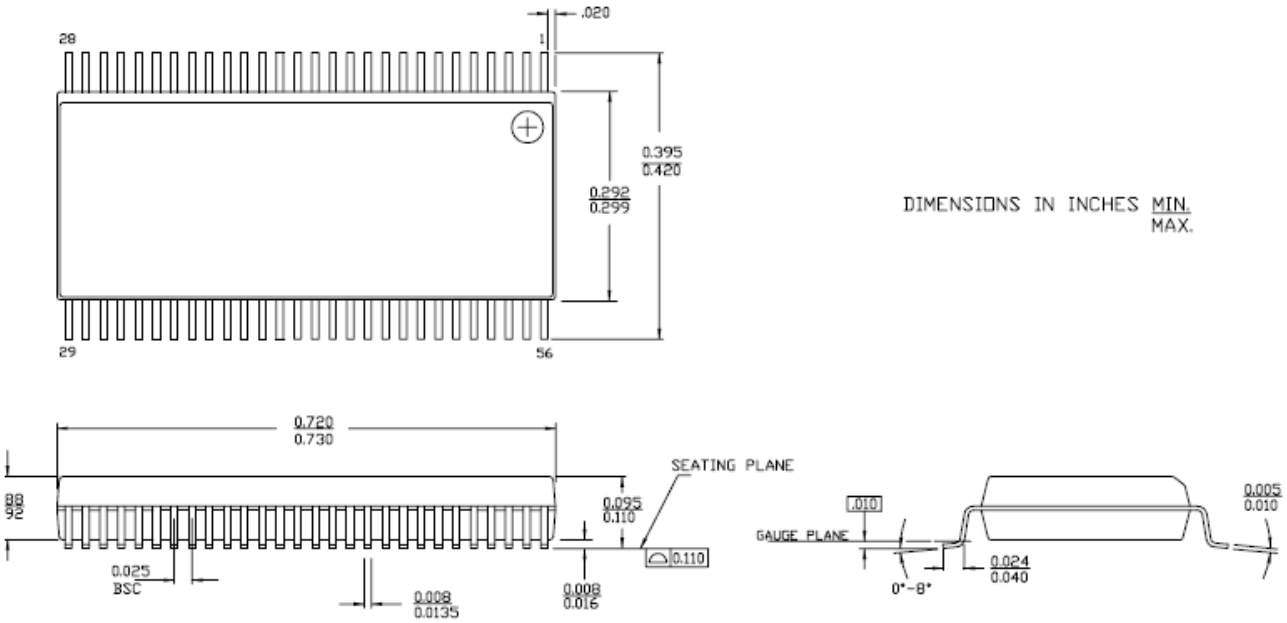


51-85062 *C



[+] Feedback

## Package Diagrams (continued)

**Figure 14. 56-Pin QFN 8 x 8 mm LF56A**

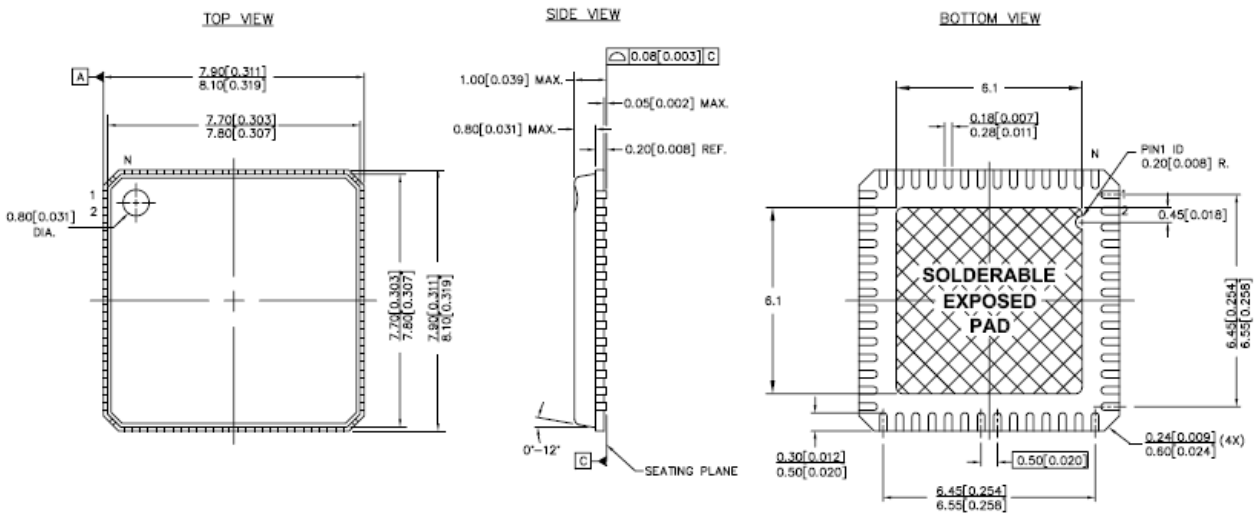


**NOTES:**

1. HATCH AREA IS SOLDERABLE EXPOSED METAL.
2. REFERENCE JEDEC#: MO-220
3. PACKAGE WEIGHT: 0.162g
4. ALL DIMENSIONS ARE IN MM [MIN/MAX]
5. PACKAGE CODE

| PART # | DESCRIPTION |
|---|---|
| LF56 | STANDARD |
| LY56 | PB-FREE |

51-85144 *G

**Figure 15. 56-Pin QFN (8 X 8 X 0.9 MM) - Sawn**

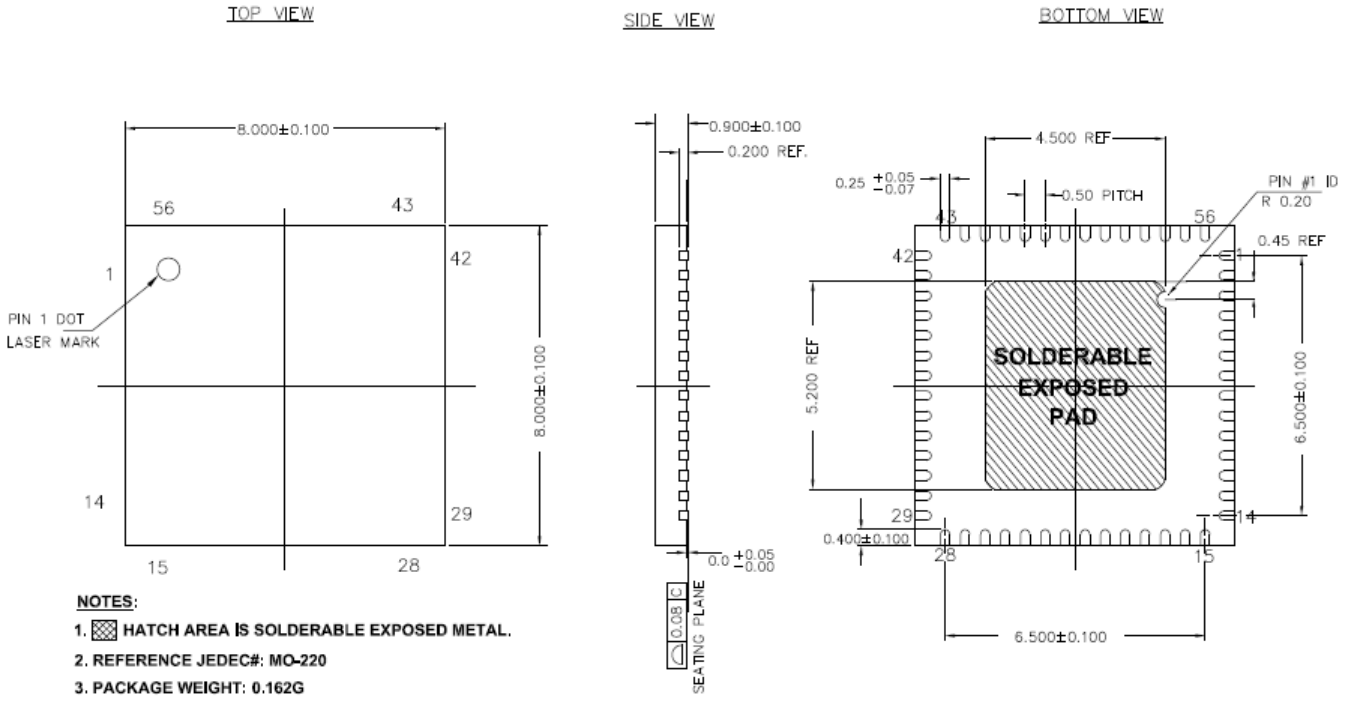


**NOTES:**

1. HATCH AREA IS SOLDERABLE EXPOSED METAL.
2. REFERENCE JEDEC#: MO-220
3. PACKAGE WEIGHT: 0.162G
4. ALL DIMENSIONS ARE IN MILLIMETERS

001-53450 **



[+] Feedback

## General PCB Layout Recommendations for USB Mass Storage Designs

The following recommendations must be followed to ensure reliable high-performance operation:

- Use at least a four-layer, impedance controlled board to maintain signal quality.
- Specify specific impedance targets (ask your board vendor what they can achieve).
- Maintain uniform trace widths and trace spacing to control impedance.
- Minimize reflected signals by avoiding using stubs and vias.
- Connect the USB connector shell and signal ground as near to the USB connector as possible.
- Use bypass/flyback capacitors on VBUS near the connector.
- Keep DPLUS and DMINUS trace lengths to within 2 mm of each other in length, with a preferred length of 20–30 mm.
- Maintain a solid ground plane under the DPLUS and DMINUS traces. Do not allow the plane to be split under these traces.
- Do not place vias on the DPLUS or DMINUS trace routing for a more stable design.
- Isolate the DPLUS and DMINUS traces from all other signal traces by no less than 10 mm.
- Source for recommendations:
  - *EZ-USB FX2LP PCB Design Recommendations*
    www.cypress.com/?docID=4696
  - *High speed USB Platform Design Guidelines*
    http://www.usb.org/developers/docs/hs_usb_pdg_r1_0.pdf

## Quad Flat Package No Leads (QFN) Package Design Notes

Electrical contact of the part to the Printed Circuit Board (PCB) is made by soldering the leads on the bottom surface of the package to the PCB. Hence, special attention is required to the heat transfer area below the package to provide a good thermal bond to the circuit board. A Copper (Cu) fill must be designed into the PCB as a thermal pad under the package. Heat is transferred from the AT2LP through the device's metal paddle on the bottom side of the package. Heat from here is conducted to the PCB at the thermal pad. It is then conducted from the thermal pad to the PCB inner ground plane by a 5 x 5 array of vias. A via is a plated through-hole in the PCB with a finished diameter of 13 mil. The QFN's metal die paddle must be soldered to the PCB's thermal pad. Solder mask is placed on the board top side over each via to resist solder flow into the via. The mask on the top side also minimizes outgassing during the solder reflow process.

For further information on this package design, refer to the application note *Surface Mount Assembly of AMKOR's MicroLeadFrame (MLF) Technology.* The application note provides detailed information on board mounting guidelines, soldering flow, rework process, etc.

Figure 16 displays a cross-sectional area underneath the package. The cross section is of only one via. The solder paste template needs to be designed to enable at least 50% solder coverage. The thickness of the solder paste template must be 5 mil. It is recommended that 'No Clean,' type 3 solder paste is used for mounting the part. Nitrogen purge is recommended during reflow.

**Figure 16. Cross-Section of the Area Under the QFN Package**

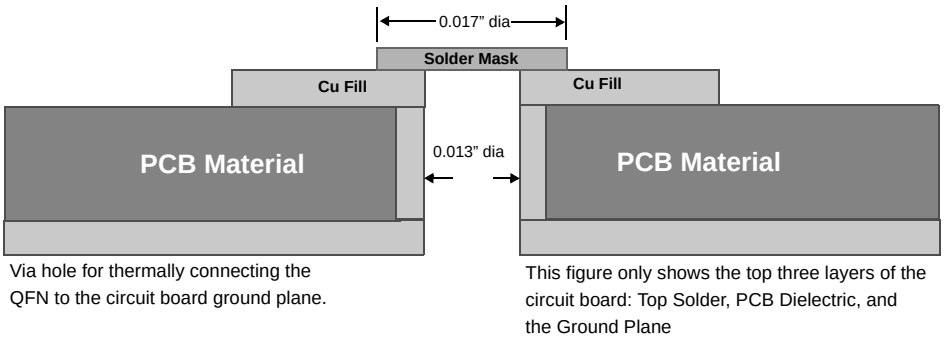




[+] Feedback

Figure 17 is a plot of solder mask pattern and Figure 18 displays an X-Ray image of assembly (darker areas indicate solder).

**Figure 17. Plot of the Solder Mask (White Area)**

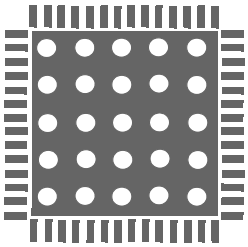

**Figure 18. X-Ray Image of the Assembly**

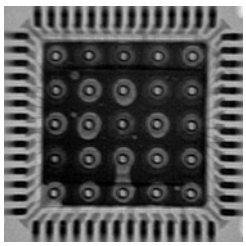

## Other Design Considerations

Certain design considerations must be followed to ensure proper operation of the CY7C68300C/CY7C68301C. The following items must be taken into account when designing a USB device with the CY7C68300C/CY7C68301C.

### Proper Power Up Sequence

Power must be applied to the CY7C68300C/CY7C68301C before, or at the same time as the ATA/ATAPI device. If power is supplied to the drive first, the CY7C68300C/CY7C68301C startup in an undefined state. Designs that utilize separate power supplies for the CY7C68300C/CY7C68301C and the ATA/ATAPI device are not recommended.

### IDE Removable Media Devices

The AT2LP does not fully support IDE removable media devices. Changes in media state are not reported to the operating system so users are unable to eject/reinsert media properly. This may result in lost or corrupted data. Note that standard ATAPI optical drives and ATA CompactFlash-type devices are not part of this group.

### Devices With Small Buffers

The size of the drive's buffer can greatly affect the overall data transfer performance. Care must be taken to ensure that drives have large enough buffers to handle the flow of data to and from it. The exact buffer size needed depends on a number of variables, but a good rule of thumb is:

(aprox min buffer) = (data rate) * (seek time + rotation time + other)

where 'other' may include things such as the time required to switch heads, power up a laser, etc. Drives with buffers that are too small to handle the extra data may perform considerably slower than expected.



[+] Feedback

## Document History Page

| Description Title: CY7C68300C/CY7C68301C/CY7C68320C/CY7C68321C EZ-USB AT2LP™ USB 2.0 to ATA/ATAPI Bridge<br>Document Number: 001-05809 | | | | |
|---|---|---|---|---|
| **REV.** | **ECN NO.** | **Submission Date** | **Orig. of Change** | **Description of Change** |
| ** | 409321 | See ECN | GIR | New data sheet. |
| *A | 611658 | See ECN | ARI/KKU | Implemented new template. Added part number CY7C68320C-56PVXC to the Ordering Information. Corrected part numbers on figure 5 and 6. Moved figure titles to the top of each figure per new template requirements. Made grammatical corrections. Changed the Fused Memory Data section. Added new figure: 56-pin SSOP (CY7C68320C/CY7C68321C).<br>Changed figure 10 to reflect actual Flow for Operational Mode. Changes made between “VBUS_ATA_ENABLE PIN HIGH?” and “Board Manufacturing Test Mode”. Formatted “0=”, “1=” lines in Configuration Data Organization to always show up in the same order. Re-worded 3rd bullet point in the Operation Selection Flow section.<br>GPIO2_nHS function removed and corrected the sense of ATA_EN to allow drive on ‘0’ and Hi-Z on ‘1’. |
| *B | 2717536 | DPT | 06/11/2009 | Added 56 QFN (8 X 8 mm) package diagram and added CY7C68300C-56LTXC, CY7C68301C-56LTXC, CY7C68320C-56LTXC, and CY7C68321C-56LTXC parts in the Ordering Information table |

## Sales, Solutions, and Legal Information

### Worldwide Sales and Design Support

Cypress maintains a worldwide network of offices, solution centers, manufacturer’s representatives, and distributors. To find the office closest to you, visit us at cypress.com/sales.

### Products

| | |
|---|---|
| PSoC | psoc.cypress.com |
| Clocks & Buffers | clocks.cypress.com |
| Wireless | wireless.cypress.com |
| Memories | memory.cypress.com |
| Image Sensors | image.cypress.com |

© Cypress Semiconductor Corporation, 2006-2009. The information contained herein is subject to change without notice. Cypress Semiconductor Corporation assumes no responsibility for the use of any circuitry other than circuitry embodied in a Cypress product. Nor does it convey or imply any license under patent or other rights. Cypress products are not warranted nor intended to be used for medical, life support, life saving, critical control or safety applications, unless pursuant to an express written agreement with Cypress. Furthermore, Cypress does not authorize its products for use as critical components in life-support systems where a malfunction or failure may reasonably be expected to result in significant injury to the user. The inclusion of Cypress products in life-support systems application implies that the manufacturer assumes all risk of such use and in doing so indemnifies Cypress against all charges.

Any Source Code (software and/or firmware) is owned by Cypress Semiconductor Corporation (Cypress) and is protected by and subject to worldwide patent protection (United States and foreign), United States copyright laws and international treaty provisions. Cypress hereby grants to licensee a personal, non-exclusive, non-transferable license to copy, use, modify, create derivative works of, and compile the Cypress Source Code and derivative works for the sole purpose of creating custom software and or firmware in support of licensee product to be used only in conjunction with a Cypress integrated circuit as specified in the applicable agreement. Any reproduction, modification, translation, compilation, or representation of this Source Code except as specified above is prohibited without the express written permission of Cypress.

Disclaimer: CYPRESS MAKES NO WARRANTY OF ANY KIND, EXPRESS OR IMPLIED, WITH REGARD TO THIS MATERIAL, INCLUDING, BUT NOT LIMITED TO, THE IMPLIED WARRANTIES OF MERCHANTABILITY AND FITNESS FOR A PARTICULAR PURPOSE. Cypress reserves the right to make changes without further notice to the materials described herein. Cypress does not assume any liability arising out of the application or use of any product or circuit described herein. Cypress does not authorize its products for use as critical components in life-support systems where a malfunction or failure may reasonably be expected to result in significant injury to the user. The inclusion of Cypress’ product in a life-support systems application implies that the manufacturer assumes all risk of such use and in doing so indemnifies Cypress against all charges.

Use may be limited by and subject to the applicable Cypress software license agreement.


Purchase of I2C components from Cypress or one of its sublicensed Associated Companies conveys a license under the Philips I2C Patent Rights to use these components in an I2C system, provided that the system conforms to the I2C Standard Specification as defined by Philips. All products and company names mentioned in this document may be the trademarks of their respective holders.

[+] Feedback