Infineon® Basic LED Driver Family Demo Board

Smart Features and Easy to Design In!

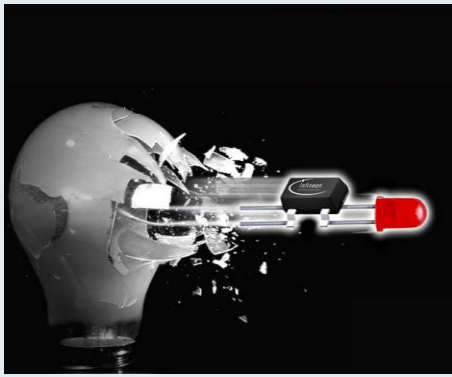

2013-07-26

http://www.infineon.com/automotive-leddrivers

Infineon® Basic LED Driver Family Demo Board - Agenda



- Infineon® Basic LED Driver Family Product Overview
- Infineon® Basic LED Driver Family Demo Board

Copyright © Infineon Technologies AG 2013. All rights reserved.

Infineon® Basic LED Driver Family Demo Board - Agenda



- Infineon® Basic LED Driver Family Product Overview
- Infineon® Basic LED Driver Family Demo Board

Copyright © Infineon Technologies AG 2013. All rights reserved.

Infineon® Basic LED Driver Family Overview

General Information

- 1 and 3 channel high side driver ICs with integrated output stages (current sources)
  - 1 channel: 180mA
  - 3 channel: 60mA

Basic features

- Output current adjustable through external low power resistors
- Wide supply voltage range 5.5…40V
- Over Load and Over Temperature protection
- PWM via external PWM signal via EN or VS

Optional features

- N-1 detection functionality or Open Load and Short Circuit Detection
- Diagnosis enable feature
- Integrated PWM dimming engine to provide two LED brightness levels only with RC-network
- Matrix setup with DC/DC buck or boost converter – Infineon® Dynamic Overhead Control
- Integrated short circuit protection with high temperature current reduction

Block diagram 3ch/1 input

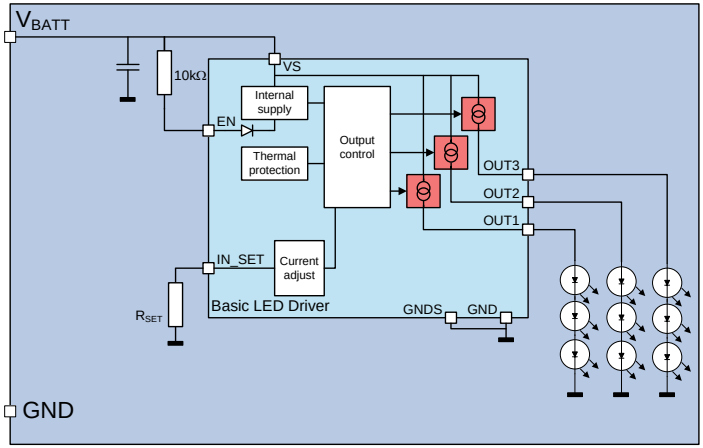



Exposed Pad

Copyright © Infineon Technologies AG 2013. All rights reserved.

Infineon® Basic LED Driver Family
Load current definition

- Load current can be adjusted by external SET-resistor RSET:

$$I_{OUT} = \frac{k^*}{R_{SET}}$$

* According to data sheet parameter "output current accuracy", typ. 750 for 3 channel devices, typ. 2250 for single channel devices

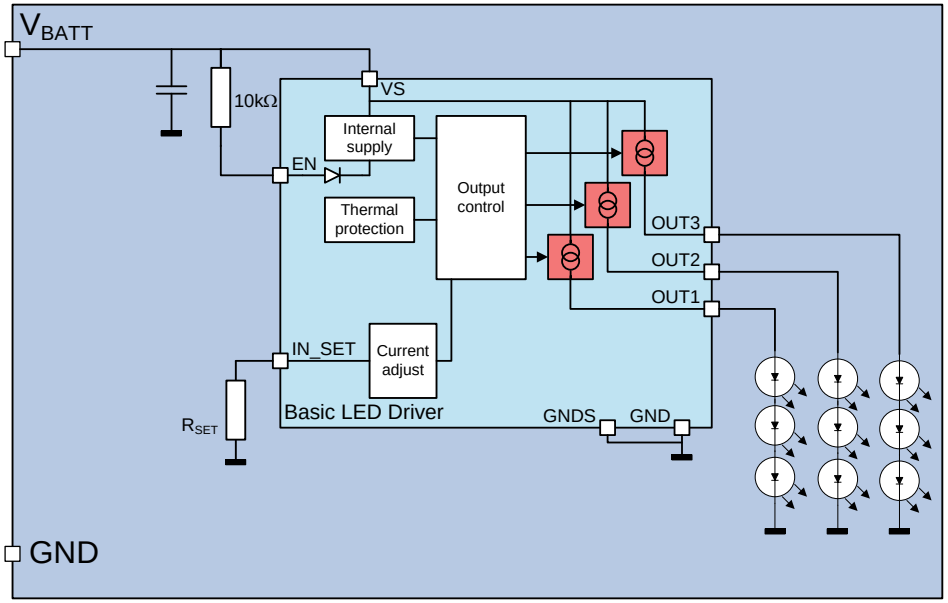

Up to 180mA load current in total!
Per channel up to 120mA!

Copyright © Infineon Technologies AG 2013. All rights reserved.

Infineon® Basic LED Driver
A modular & flexible family setup

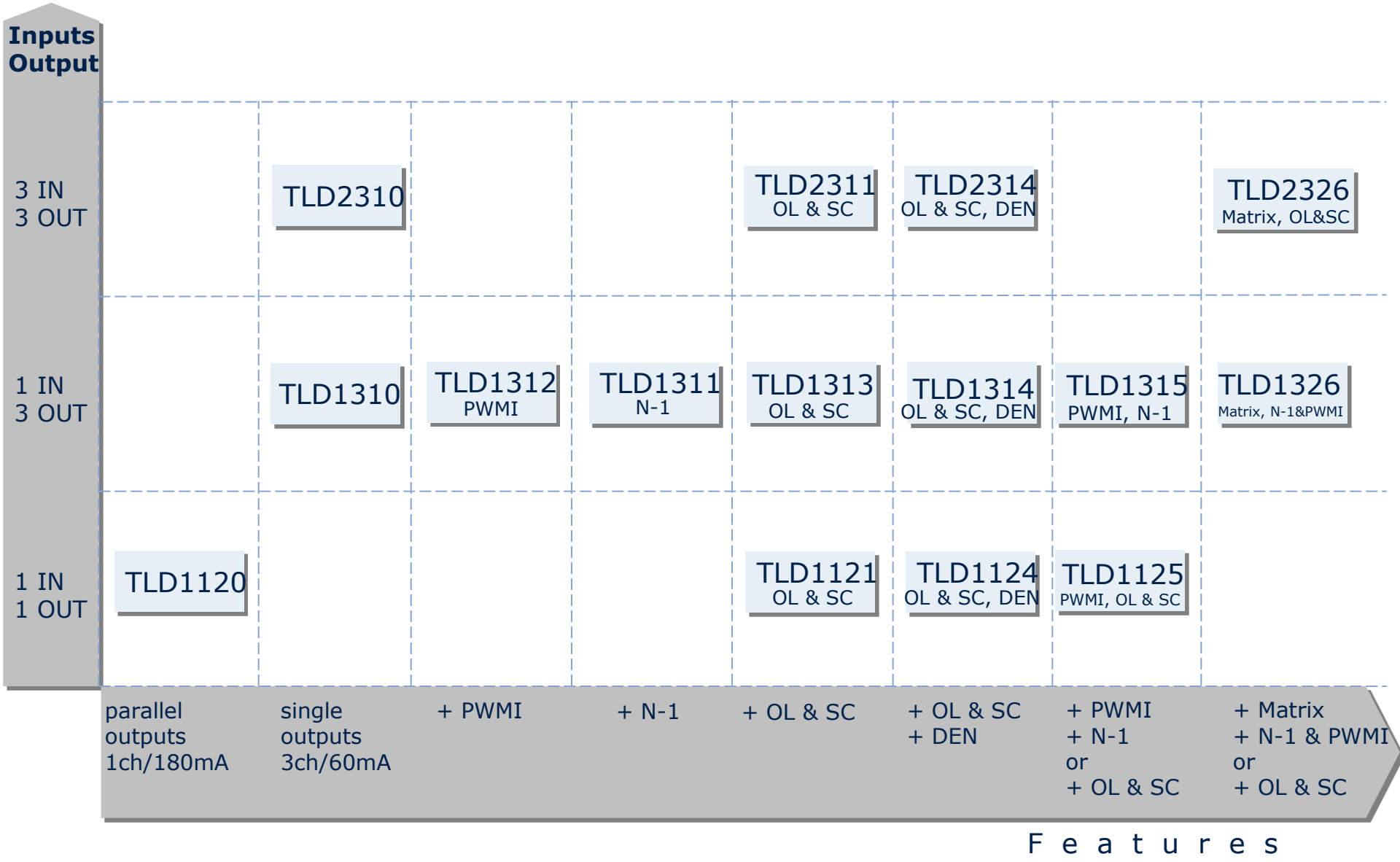

Copyright © Infineon Technologies AG 2013. All rights reserved.

Infineon® Basic LED Driver Device Nomenclature

TLDabcd

a - IN_SET:

1: 1 IN_SET pin

2: 3 IN_SET pin

b - Number of channels

c - Output current class:

1: 60mA class

2: 180mA class

d - Features:

0: Basic

1: N-1 or OL & SC detection

2: PWMI

3: OL&SC

4: OL&SC + DEN

5: PWMI + N-1 or OL & SC

6: PWMI + N-1 or OL & SC + Matrix

Legend:

N-1: Open load detection with latching diagnosis

OL & SC: Open load and short circuit detection with non latching diagnosis (auto-restart)

PWMI: Integrated PWM Generator with ext. RC network

Matrix: Operation in combination with DC/DC with dynamic overhead control

Copyright © Infineon Technologies AG 2013. All rights reserved.

Infineon® Basic LED Driver Family
Basic features (with all products)

- **Enable Function**
  - Device function enabled. The resistor connected at IN_SET defines the output current
  - Used also to supply driver's internal logic in case of very low voltages

- **IN_SET Output Current Control Function**
  - The resistor connected at IN_SET defines the output current
  - Further providing SMART IN_SET functionalities

Copyright © Infineon Technologies AG 2013. All rights reserved.

Infineon® Basic LED Driver Family
Optional add-on feature (product specific)

- **N-1 Detection**
  - If one of the activated LED chains is disconnected/broken, all channels are turned off after a configurable time
  - Time until turn off defined by external capacitor at N-1 pin
  - SMART IN_SET is switched to 5V
  - PWMI is switching off all outputs as soon as it is pulled to 5V
- **OL – Open Load Detection**
  - Open Load (OL) feedback via SMART IN_SET functionality
  - SMART IN_SET pin is pulled to 5V in case of OL
- **SC – Short circuit to GND detection**
  - The device detects short circuit to GND condition
  - Reporting of fault via SMART IN_SET pins for each channel
- **DEN – Diagnosis Enable function**
  - The supply voltage for activating the diagnosis can be defined

Copyright © Infineon Technologies AG 2013. All rights reserved.

Infineon® Basic LED Driver Family
Optional add-on feature (product specific)

- **PWMI – PWM Dimming Engine Input**
  - PWM frequency defined via low cost external hardware (one external resistor and capacitor)
  - PWMI charging capacitor, if voltage across the threshold the outputs are turned off and the capacitor is discharged via the resistor
- **Matrix Feature**
  - Matrix setup with DC/DC buck or boost converter (→ Infineon® Power LED Driver) for optimized power and voltage management
  - Infineon® Basic LED Driver providing feedback to buck or boost converter for voltage control via FB pin for smart voltage drop management across Basic LED current source

Copyright © Infineon Technologies AG 2013. All rights reserved.

The Infineon® Basic LED Driver Family offers Maximum Design Flexibility by Cross-Device Feature & Pin-Out Compatibility

Pin Compatibility



PG-SSOP14EP

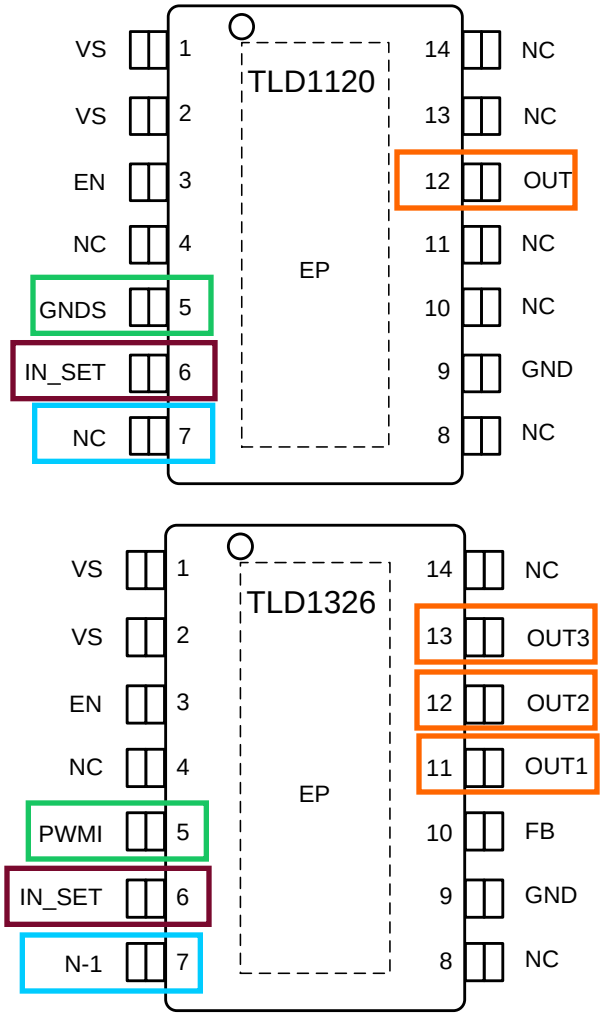

Identical Feature Set

- All members of the family provide the same features on the Supply / EN pin (+ identical pin-out)
- Family members with / without PWMI functionality can use the same PCB design
- Same IN_SET behavior / pin-out for all devices in the family
- Family members with / without N-1 or OL functionality can use the same PCB design
- 1 channel / 3 channel devices can use the same PCB design (using 0Ohm resistor)

→ If you know 1 device, you know the whole family!

Copyright © Infineon Technologies AG 2013. All rights reserved.

Infineon® Basic LED Driver Family Demo Board - Agenda



- Infineon® Basic LED Driver Family Product Overview
- Infineon® Basic LED Driver Family Demo Board

Copyright © Infineon Technologies AG 2013. All rights reserved.

Demo Boards Types

- Demo Boards are available for the following products
  - TLD1124EL
  - TLD1125EL
  - TLD1311EL
  - TLD1314EL
  - TLD1315EL
  - TLD1326EL
  - TLD2311EL
  - TLD2314EL

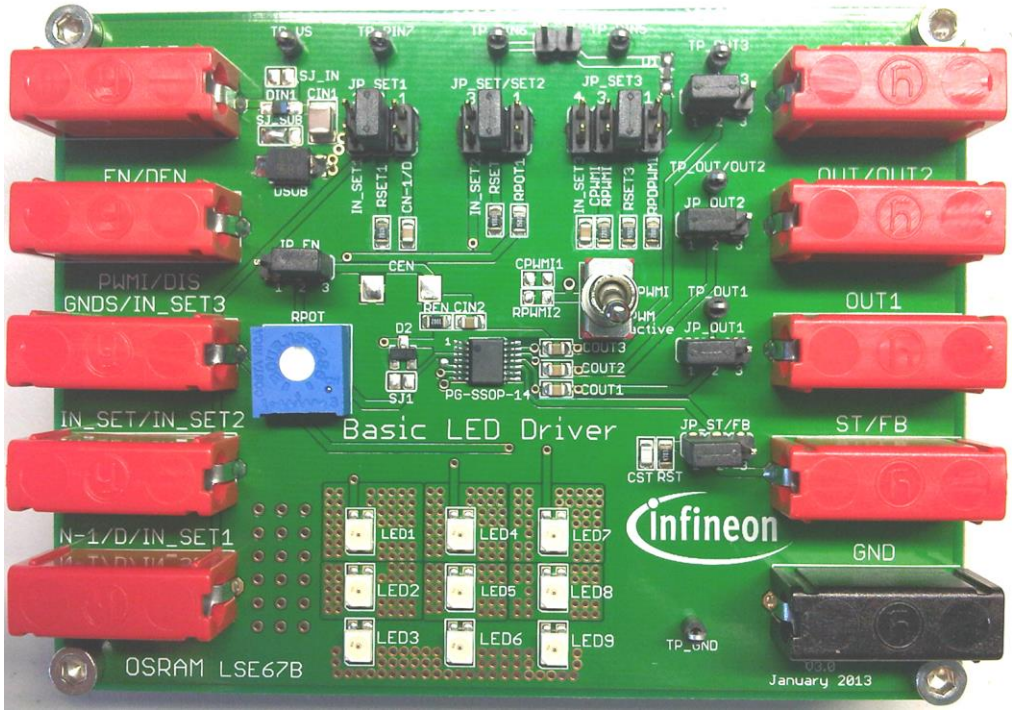

- Demo board can be used for all other products of the Basic LED Driver Family as well!

Copyright © Infineon Technologies AG 2013. All rights reserved.

Demo Boards Connectors

- All required device pins can be connected via test sockets
- One PCB can be used for all device types. Therefore, test sockets have multiple names
  - E.g. device pin 6 is used as IN_SET-pin for the TLD1311EL and as IN_SET2-pin for TLD2311EL

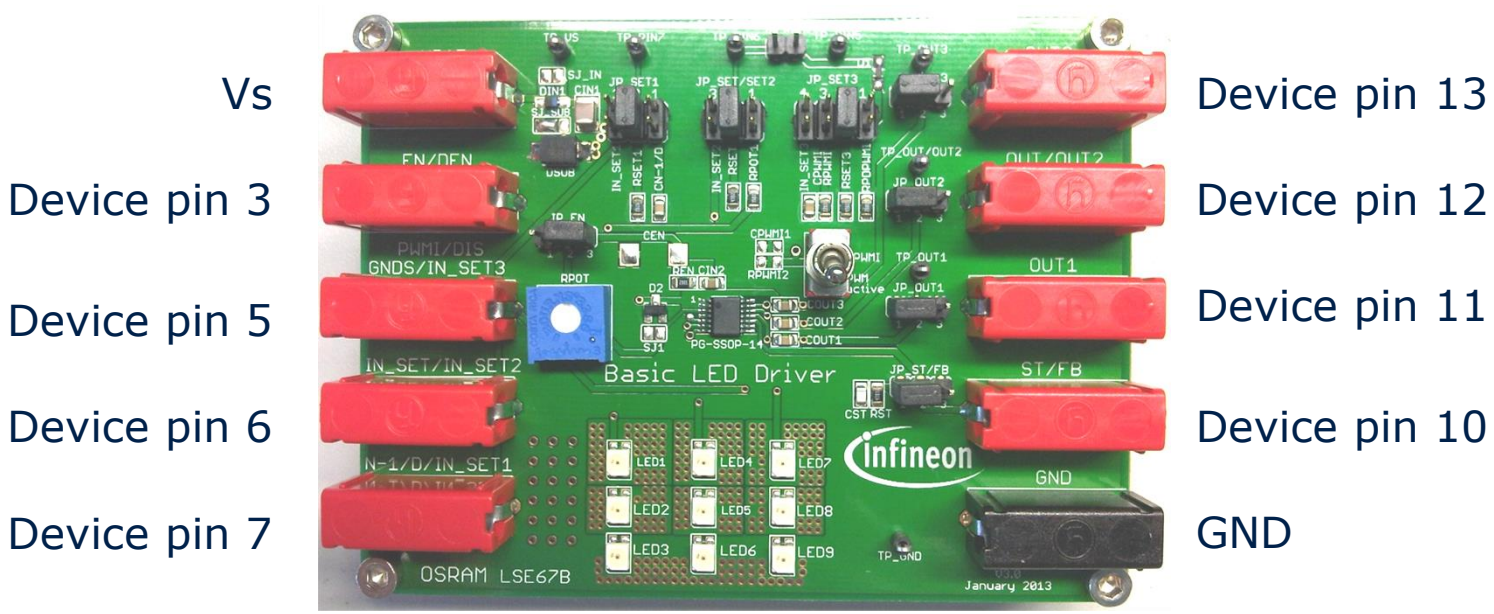

Copyright © Infineon Technologies AG 2013. All rights reserved.

Demo Boards Jumpers

- JP_EN: Connects the device's enable or DEN-pin to VS (position 2-3) or to EN-test socket (position 1-2)
- JP_OUTx: Connects the device's OUT-pins to on board LEDs (position 1-2) or OUTx-test sockets (position 2-3)

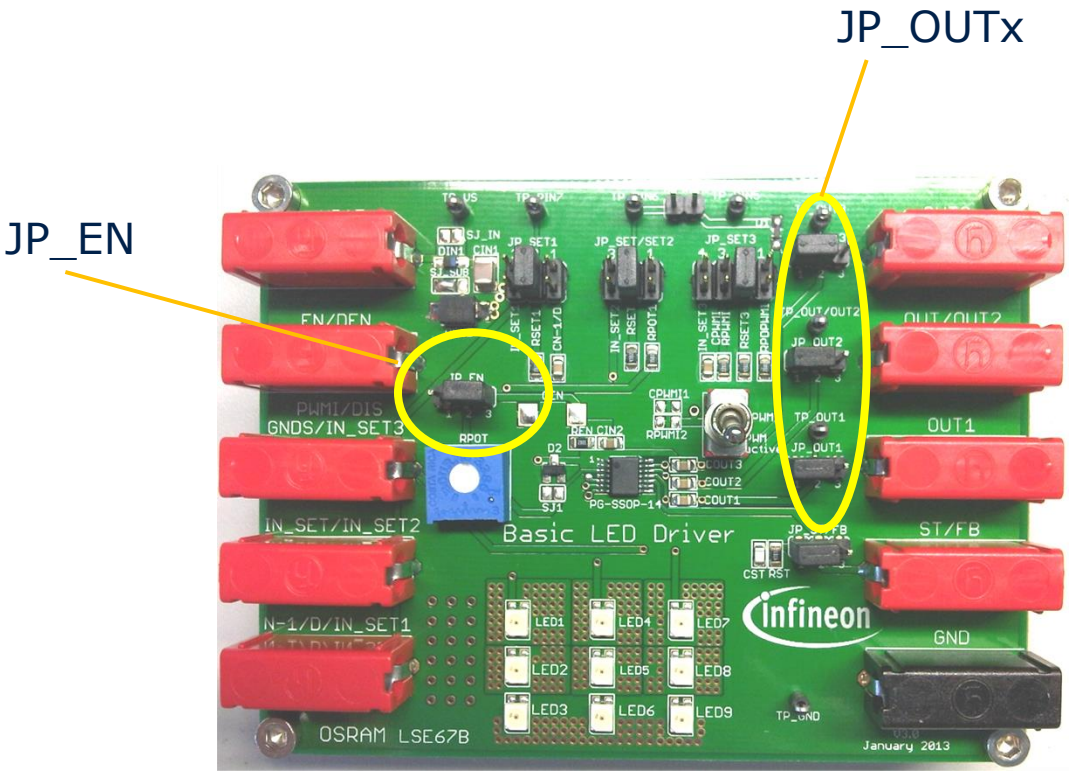

Copyright © Infineon Technologies AG 2013. All rights reserved.

Demo Boards Jumpers cont'd

- JP_SET1: Connects the device's pin 7 to
  - 1: C_{N-1}/D capacitor
  - 2: R_{SET1} resistor 47kΩ
  - 3: test socket
- JP_SET/SET2: Connects the device's pin 6 to
  - 1: R_{SET} potentiometer 15k…200kΩ
  - 2: R_{SET2} resistor 47kΩ
  - 3: test socket
- JP_SET3: Connects the device's pin 5 to
  - 1: R_{PWMI} pull down resistor and connection to IN_SET for N-1 configuration
  - 2: R_{SET3} resistor 47kΩ
  - 3: PWMI circuit (R_{PWMI} and C_{PWMI}), deactivation of PWMI via switch SPWMI
  - 4: test socket
- Switch SPWMI: Activates or deactivates internal PWM generation (only for devices with PWMI-feature and jumper JP_SET3 in position 3)

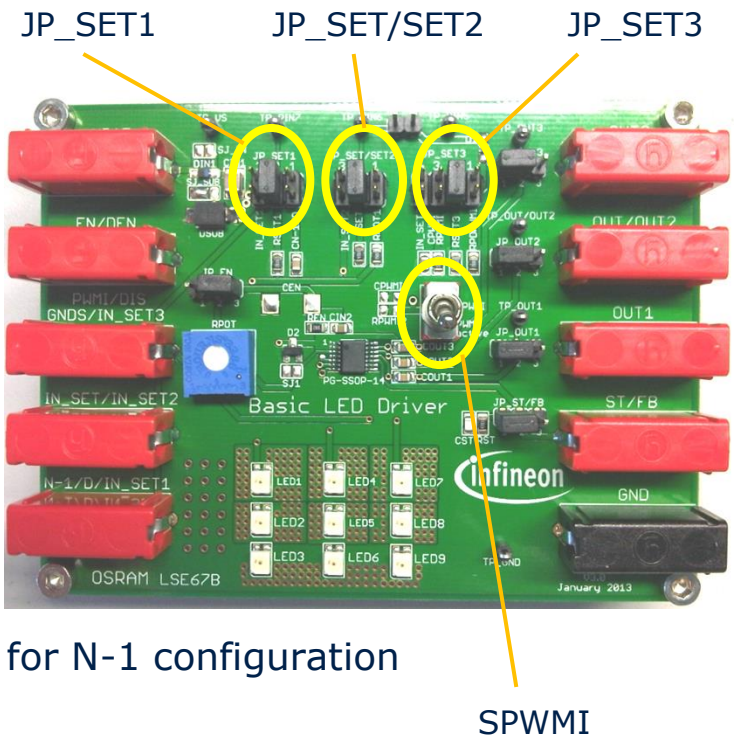

Copyright © Infineon Technologies AG 2013. All rights reserved.

Jumper Settings using onboard Components

Device	Jumper JP_EN	Jumper JP_SET1	Jumper JP_SET/SET2	Jumper JP_SET3
TLD1124EL	1-2	Not required	1 or 2	Not required
TLD1125EL	1-2 or 2-3*	1	1 or 2	3
TLD1311EL	1-2 or 2-3*	1	1 or 2	1
TLD1314EL	1-2	Not required	1 or 2	Not required
TLD1315EL	1-2 or 2-3*	1	1 or 2	3**
TLD1326EL	1-2 or 2-3*	1	1 or 2	3**
TLD2311EL	1-2 or 2-3*	2	1 or 2	2
TLD2314EL	1-2	2	1 or 2	2

* EN connected to onboard VS in position 2-3
** For PWMI feature use jumper position 3, for N-1 feature use position 1

The numbers in the table above indicate the jumper position as written on the demo board. The picture shows jumper position 1:

Jumper position

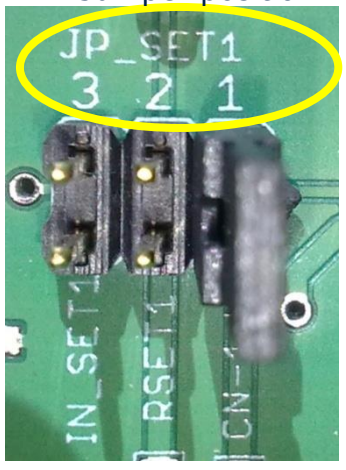

Copyright © Infineon Technologies AG 2013. All rights reserved.

Demo Board Schematic

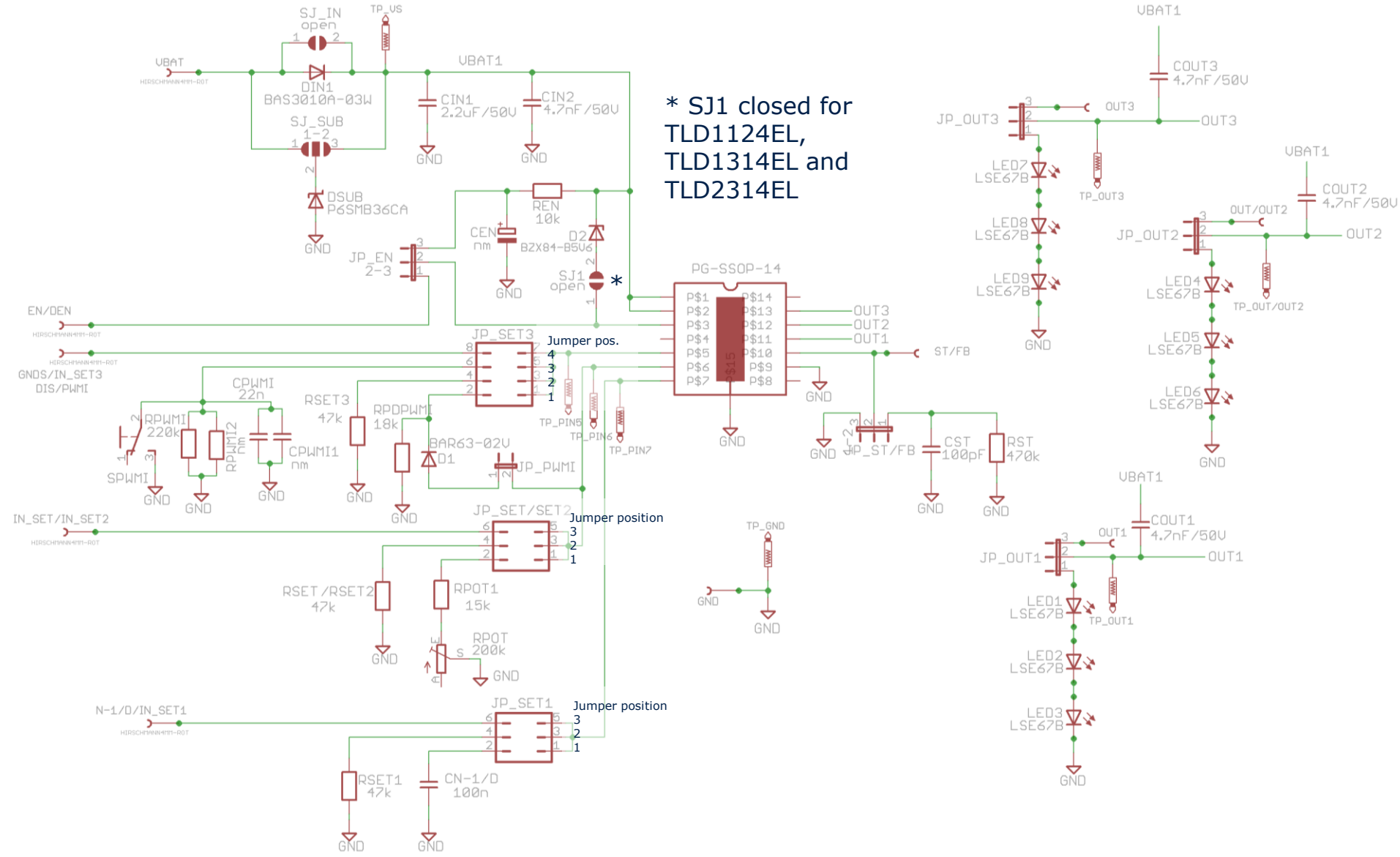

Copyright © Infineon Technologies AG 2013. All rights reserved.

ENERGY EFFICIENCY
MOBILITY
SECURITY

Innovative semiconductor solutions for energy efficiency, mobility and security.



