MOSFET

600V CoolMOS™ P7 Power Transistor

PG - TO220 FullPAK WideCreepage



The CoolMOS™ 7th generation platform is a revolutionary technology for high voltage power MOSFETs, designed according to the superjunction (SJ) principle and pioneered by Infineon Technologies. The 600V CoolMOS™ P7 series is the successor to the CoolMOS™ P6 series. It combines the benefits of a fast switching SJ MOSFET with excellent ease of use, e.g. very low ringing tendency, outstanding robustness of body diode against hard commutation and excellent ESD capability. Furthermore, extremely low switching and conduction losses make switching applications even more efficient, more compact and much cooler.

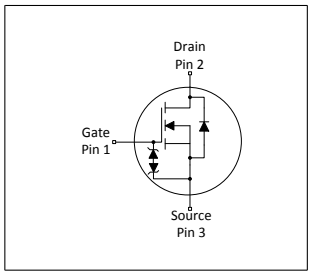

Features

- Suitable for hard and soft switching (PFC and LLC) due to an outstanding commutation ruggedness
- Significant reduction of switching and conduction losses
- Excellent ESD robustness >2kV (HBM) for all products
- Better $R_{DS(on)}$/package products compared to competition enabled by a low $R_{DS(on)}$*A (below 1Ohm*mm²)
- Product validation acc. JEDEC Standard

Benefits

- Ease of use and fast design-in through low ringing tendency and usage across PFC and PWM stages
- Simplified thermal management due to low switching and conduction losses
- Increased power density solutions enabled by using products with smaller footprint and higher manufacturing quality due to >2 kV ESD protection
- Suitable for a wide variety of applications and power ranges

Potential applications

PFC stages, hard switching PWM stages and resonant switching stages for e.g. PC Silverbox, Adapter, LCD & PDP TV, Lighting, Server, Telecom and UPS.

Please note: For MOSFET paralleling the use of ferrite beads on the gate or separate totem poles is generally recommended.

Table 1 Key Performance Parameters

Parameter	Value	Unit
V_{DS} @ $T_{j,max}$	650	V
$R_{DS(on),max}$	360	mΩ
$Q_{g,typ}$	13	nC
$I_{D,pulse}$	26	A
E_{oss} @ 400V	1.6	µJ
Body diode di_F/dt	900	A/µs

Type / Ordering Code	Package	Marking	Related Links
IPAW60R360P7S	PG -TO220 FullPAK WideCreepage	60S360P7	see Appendix A

Table of Contents

Description 1
Maximum ratings 3
Thermal characteristics 4
Electrical characteristics 5
Electrical characteristics diagrams 7
Test Circuits 11
Package Outlines 12
Appendix A 13
Revision History 14
Trademarks 14
Disclaimer 14

1 Maximum ratings

at T_j = 25°C, unless otherwise specified

Table 2 Maximum ratings

Parameter	Symbol	Values			Unit	Note / Test Condition
		Min.	Typ.	Max.		
Continuous drain current[1)]	I_D	- -	- -	9 6	A	T_C=25°C T_C=100°C
Pulsed drain current[2)]	$I_{D,pulse}$	-	-	26	A	T_C=25°C
Avalanche energy, single pulse	E_{AS}	-	-	27	mJ	I_D=2.5A; V_{DD}=50V; see table 10
Avalanche energy, repetitive	E_{AR}	-	-	0.14	mJ	I_D=2.5A; V_{DD}=50V; see table 10
Avalanche current, single pulse	I_{AS}	-	-	2.5	A	-
MOSFET dv/dt ruggedness	dv/dt	-	-	80	V/ns	V_{DS}=0...400V
Gate source voltage (static)	V_{GS}	-20	-	20	V	static;
Gate source voltage (dynamic)	V_{GS}	-30	-	30	V	AC (f>1 Hz)
Power dissipation	P_{tot}	-	-	22	W	T_C=25°C
Storage temperature	T_{stg}	-40	-	150	°C	-
Operating junction temperature	T_j	-40	-	150	°C	-
Mounting torque	-	-	-	50	Ncm	M2.5 screws
Continuous diode forward current	I_S	-	-	9	A	T_C=25°C
Diode pulse current[2)]	$I_{S,pulse}$	-	-	26	A	T_C=25°C
Reverse diode dv/dt[3)]	dv/dt	-	-	50	V/ns	V_{DS}=0...400V, I_{SD}<=9A, T_j=25°C see table 8
Maximum diode commutation speed	di_F/dt	-	-	900	A/µs	V_{DS}=0...400V, I_{SD}<=9A, T_j=25°C see table 8
Insulation withstand voltage	V_{ISO}	-	-	2500	V	V_{rms}, T_C=25°C, t=1min

[1)] Limited by $T_{j,max}$. Maximum Duty Cycle D = 0.50; TO-220 equivalent
[2)] Pulse width t_p limited by $T_{j,max}$
[3)] Identical low side and high side switch with identical R_G

2 Thermal characteristics

Table 3 Thermal characteristics

Parameter	Symbol	Values			Unit	Note / Test Condition
		Min.	Typ.	Max.		
Thermal resistance, junction - case	R_{thJC}	-	-	5.61	°C/W	-
Thermal resistance, junction - ambient	R_{thJA}	-	-	62	°C/W	leaded
Thermal resistance, junction - ambient for SMD version	R_{thJA}	-	-	-	°C/W	-
Soldering temperature, wavesoldering only allowed at leads	T_{sold}	-	-	260	°C	1.6mm (0.063 in.) from case for 10s

3 Electrical characteristics

at T_j=25°C, unless otherwise specified

Table 4 Static characteristics

Parameter	Symbol	Values			Unit	Note / Test Condition
		Min.	Typ.	Max.		
Drain-source breakdown voltage	$V_{(BR)DSS}$	600	-	-	V	V_{GS}=0V, I_D=1mA
Gate threshold voltage	$V_{(GS)th}$	3	3.5	4	V	V_{DS}=V_{GS}, I_D=0.14mA
Zero gate voltage drain current	I_{DSS}	- -	- 10	1 -	µA	V_{DS}=600V, V_{GS}=0V, T_j=25°C V_{DS}=600V, V_{GS}=0V, T_j=150°C
Gate-source leakage current	I_{GSS}	-	-	1000	nA	V_{GS}=20V, V_{DS}=0V
Drain-source on-state resistance	$R_{DS(on)}$	- -	0.300 0.702	0.360 -	Ω	V_{GS}=10V, I_D=2.7A, T_j=25°C V_{GS}=10V, I_D=2.7A, T_j=150°C
Gate resistance	R_G	-	6.2	-	Ω	f=1MHz, open drain

Table 5 Dynamic characteristics

Parameter	Symbol	Values			Unit	Note / Test Condition
		Min.	Typ.	Max.		
Input capacitance	C_{iss}	-	555	-	pF	V_{GS}=0V, V_{DS}=400V, f=250kHz
Output capacitance	C_{oss}	-	10	-	pF	V_{GS}=0V, V_{DS}=400V, f=250kHz
Effective output capacitance, energy related[1)]	$C_{o(er)}$	-	20	-	pF	V_{GS}=0V, V_{DS}=0...400V
Effective output capacitance, time related[2)]	$C_{o(tr)}$	-	214	-	pF	I_D=constant, V_{GS}=0V, V_{DS}=0...400V
Turn-on delay time	$t_{d(on)}$	-	8	-	ns	V_{DD}=400V, V_{GS}=13V, I_D=2.7A, R_G=10.0Ω; see table 9
Rise time	t_r	-	7	-	ns	V_{DD}=400V, V_{GS}=13V, I_D=2.7A, R_G=10.0Ω; see table 9
Turn-off delay time	$t_{d(off)}$	-	42	-	ns	V_{DD}=400V, V_{GS}=13V, I_D=2.7A, R_G=10.0Ω; see table 9
Fall time	t_f	-	10	-	ns	V_{DD}=400V, V_{GS}=13V, I_D=2.7A, R_G=10.0Ω; see table 9

Table 6 Gate charge characteristics

Parameter	Symbol	Values			Unit	Note / Test Condition
		Min.	Typ.	Max.		
Gate to source charge	Q_{gs}	-	3	-	nC	V_{DD}=400V, I_D=2.7A, V_{GS}=0 to 10V
Gate to drain charge	Q_{gd}	-	4	-	nC	V_{DD}=400V, I_D=2.7A, V_{GS}=0 to 10V
Gate charge total	Q_g	-	13	-	nC	V_{DD}=400V, I_D=2.7A, V_{GS}=0 to 10V
Gate plateau voltage	$V_{plateau}$	-	5.2	-	V	V_{DD}=400V, I_D=2.7A, V_{GS}=0 to 10V

[1)] $C_{o(er)}$ is a fixed capacitance that gives the same stored energy as C_{oss} while V_{DS} is rising from 0 to 400V
[2)] $C_{o(tr)}$ is a fixed capacitance that gives the same charging time as C_{oss} while V_{DS} is rising from 0 to 400V

Table 7 Reverse diode characteristics

Parameter	Symbol	Values			Unit	Note / Test Condition
		Min.	Typ.	Max.		
Diode forward voltage	V_{SD}	-	0.9	-	V	V_{GS}=0V, I_F=2.7A, T_j=25°C
Reverse recovery time	t_{rr}	-	145	-	ns	V_R=400V, I_F=1A, di_F/dt=100A/µs; see table 8
Reverse recovery charge	Q_{rr}	-	0.74	-	µC	V_R=400V, I_F=1A, di_F/dt=100A/µs; see table 8
Peak reverse recovery current	I_{rrm}	-	11	-	A	V_R=400V, I_F=1A, di_F/dt=100A/µs; see table 8

4 Electrical characteristics diagrams

Diagram 1: Power dissipation

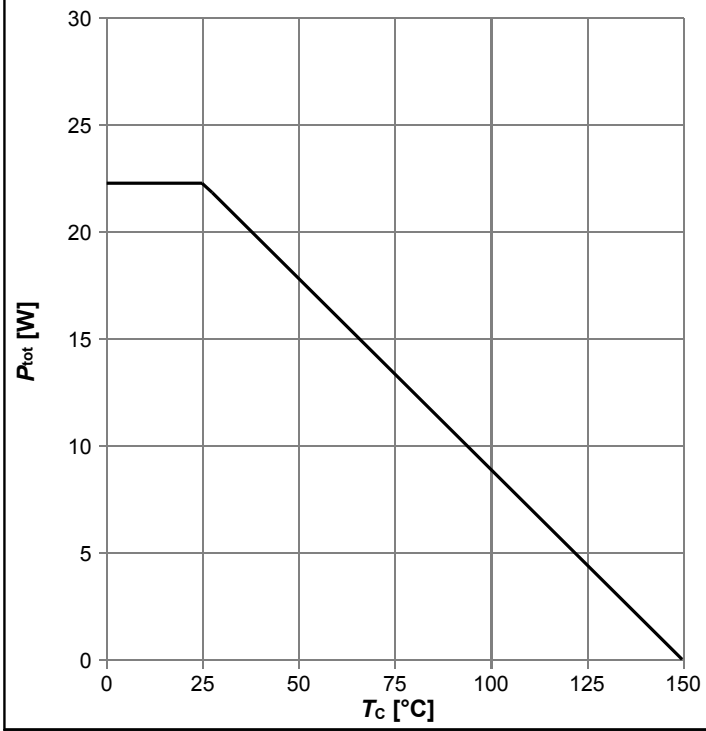

$P_{tot}=f(T_C)$

Diagram 2: Safe operating area

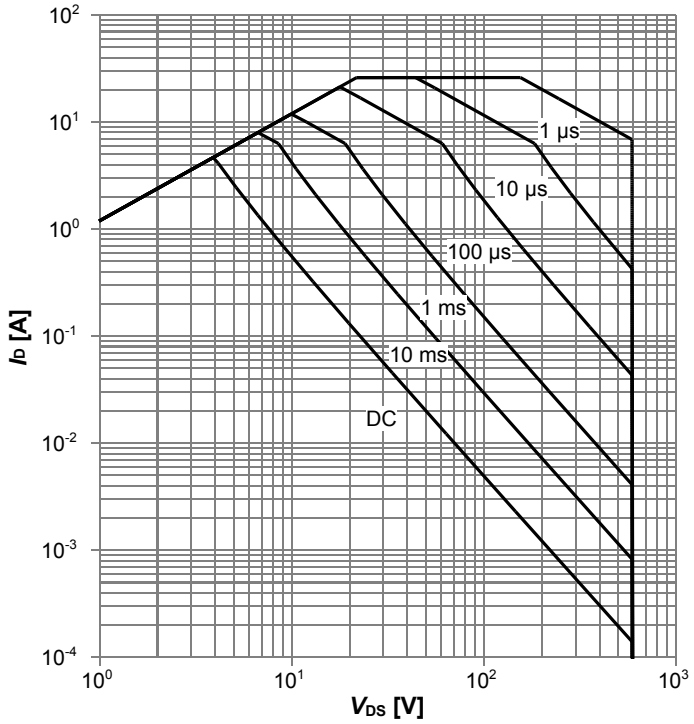

$I_D=f(V_{DS})$; T_C=25 °C; D=0; parameter: t_p

Diagram 3: Safe operating area

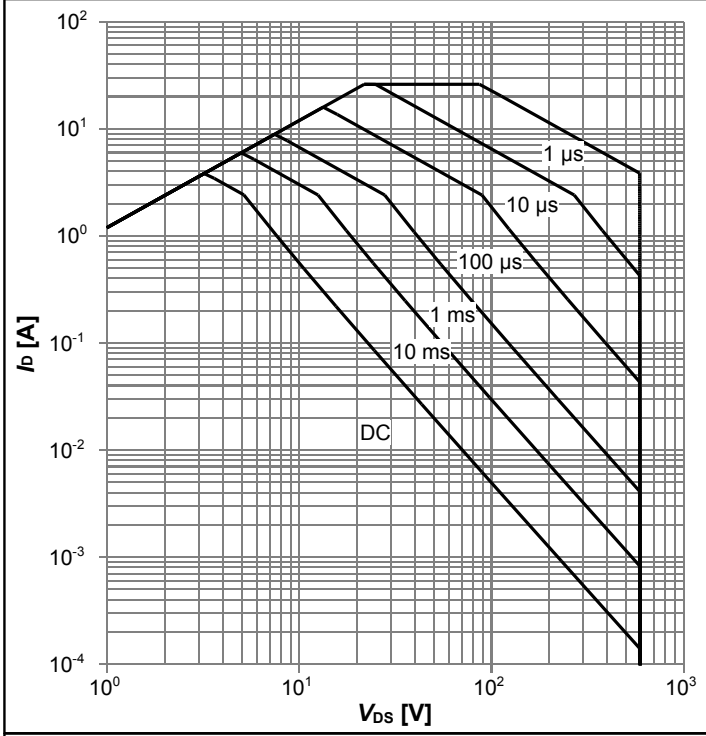

$I_D=f(V_{DS})$; T_C=80 °C; D=0; parameter: t_p

Diagram 4: Max. transient thermal impedance

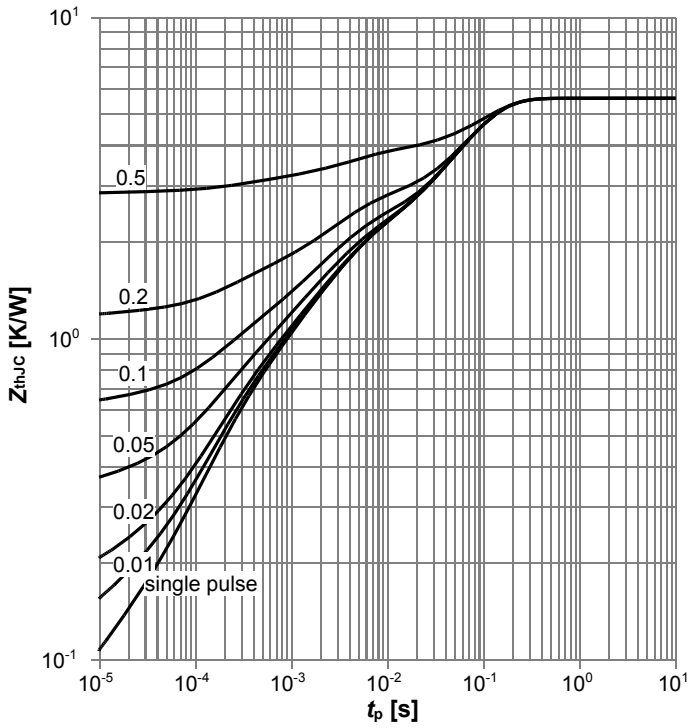

$Z_{thJC}=f(t_P)$; parameter: $D=t_p/T$

Diagram 5: Typ. output characteristics

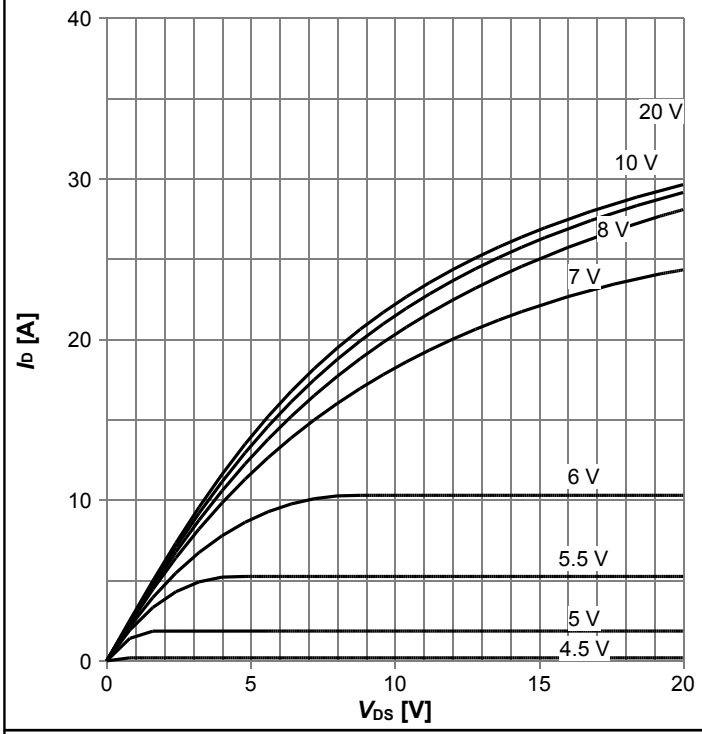

I_D=f(V_{DS}); T_j=25 °C; parameter: V_{GS}

Diagram 6: Typ. output characteristics

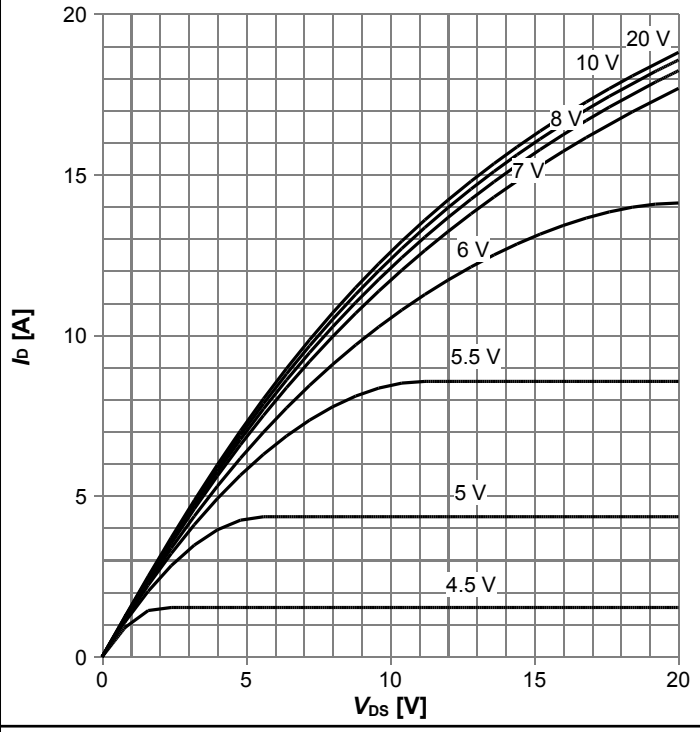

I_D=f(V_{DS}); T_j=125 °C; parameter: V_{GS}

Diagram 7: Typ. drain-source on-state resistance

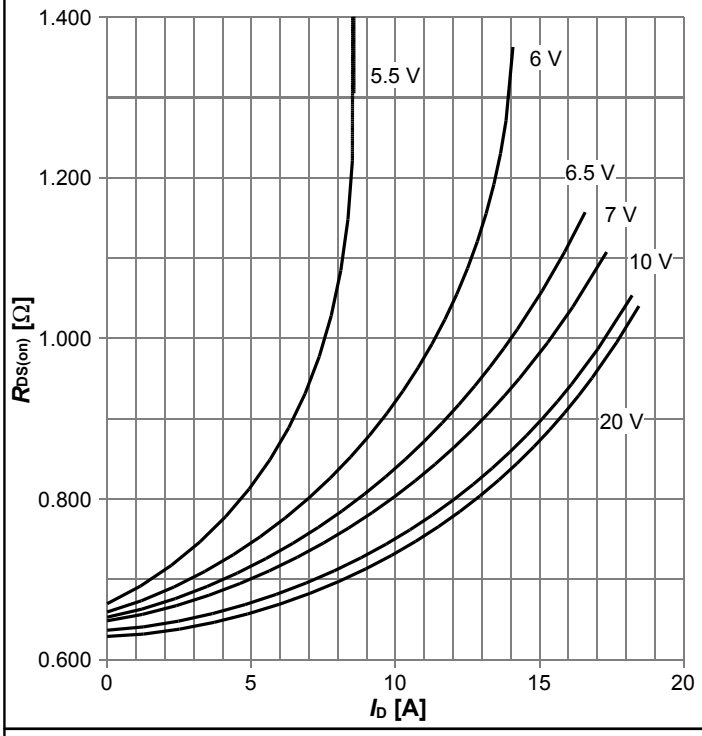

$R_{DS(on)}$=f(I_D); T_j=125 °C; parameter: V_{GS}

Diagram 8: Drain-source on-state resistance

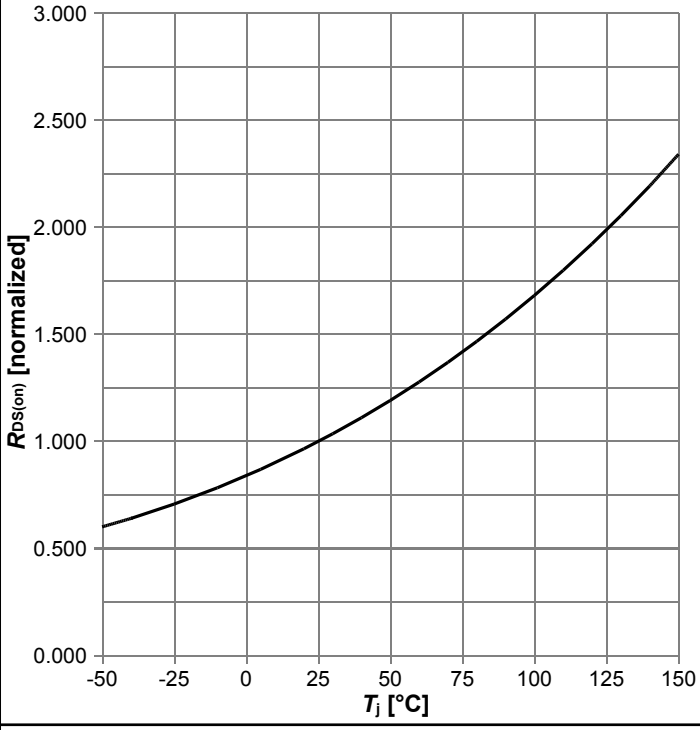

$R_{DS(on)}$=f(T_j); I_D=2.7 A; V_{GS}=10 V

Diagram 9: Typ. transfer characteristics

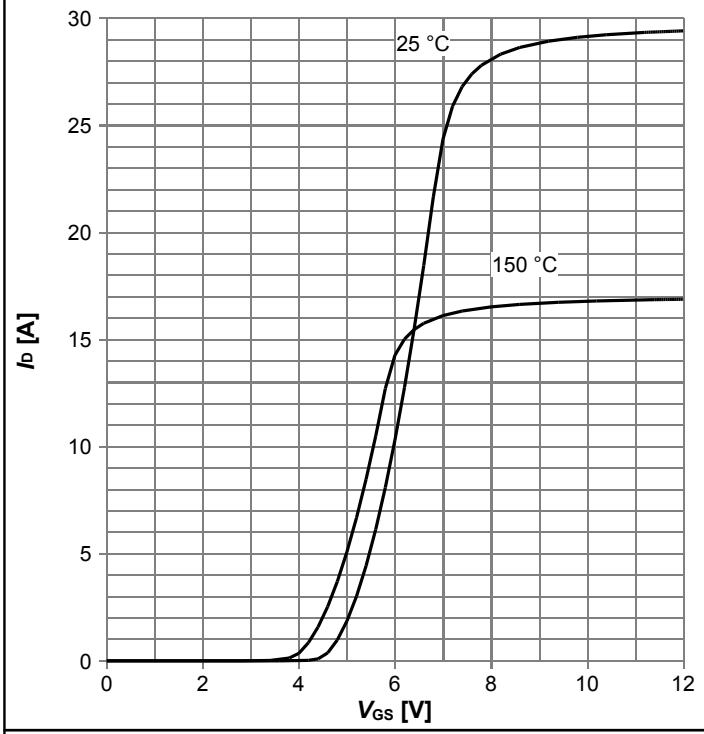

I_D=f(V_{GS}); V_{DS}=20V; parameter: T_j

Diagram 10: Typ. gate charge

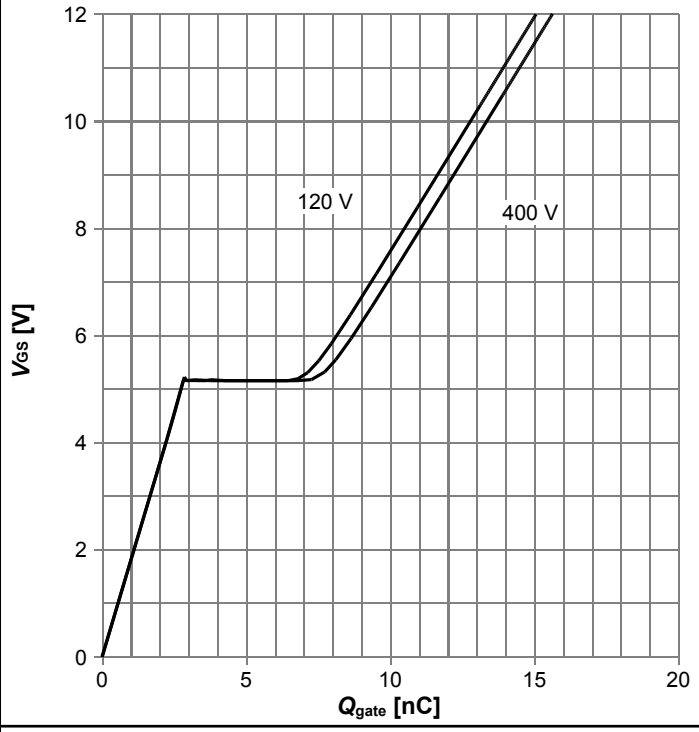

V_{GS}=f(Q_{gate}); I_D=2.7 A pulsed; parameter: V_{DD}

Diagram 11: Forward characteristics of reverse diode

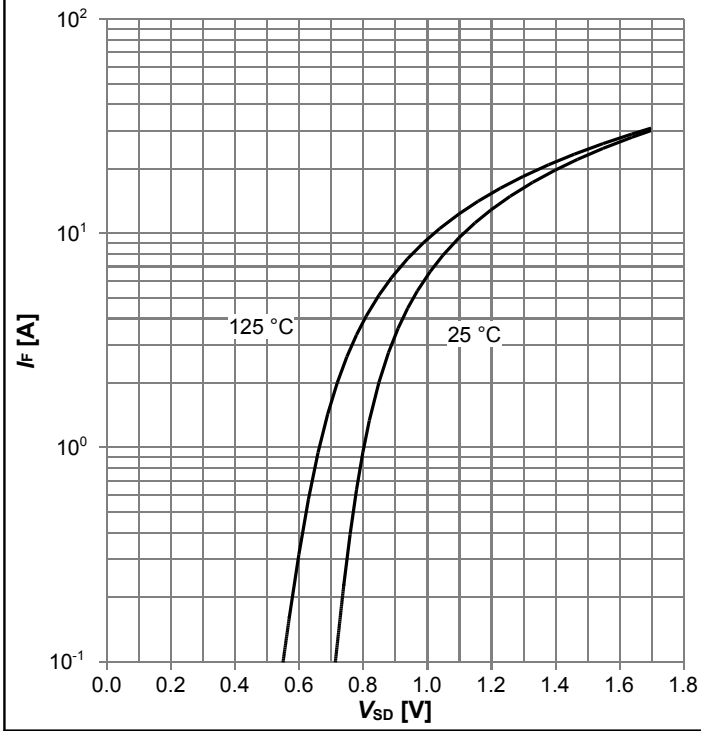

I_F=f(V_{SD}); parameter: T_j

Diagram 12: Avalanche energy

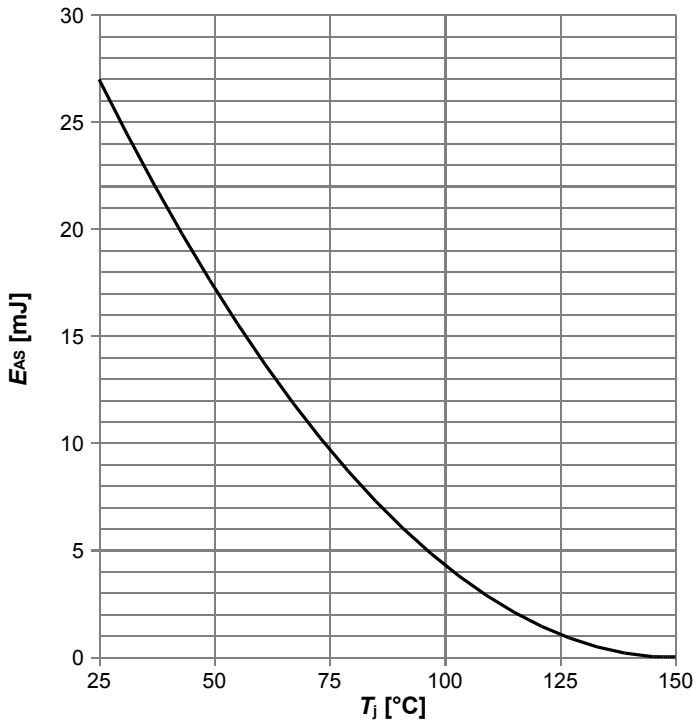

E_{AS}=f(T_j); I_D=2.5 A; V_{DD}=50 V

Diagram 13: Drain-source breakdown voltage

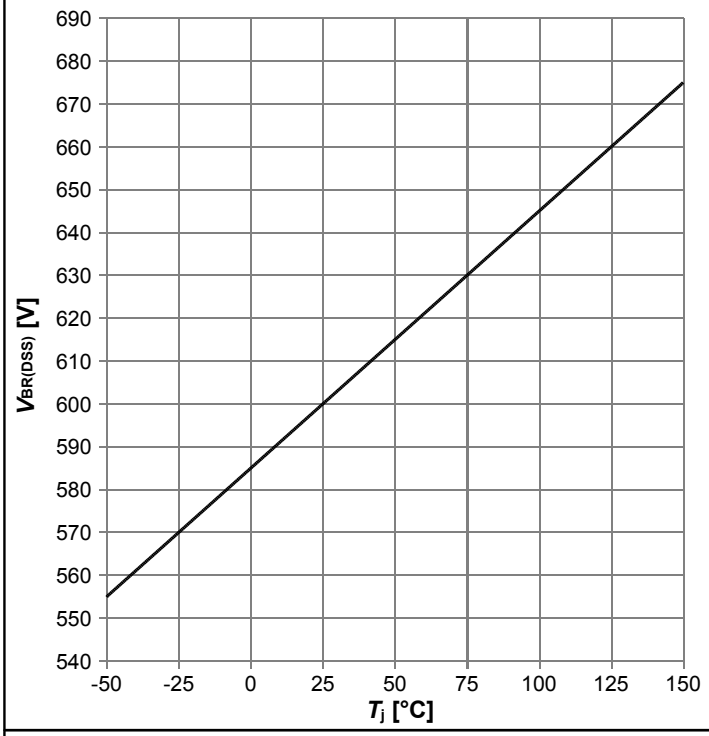

$V_{BR(DSS)}$=f(T_j); I_D=1 mA

Diagram 14: Typ. capacitances

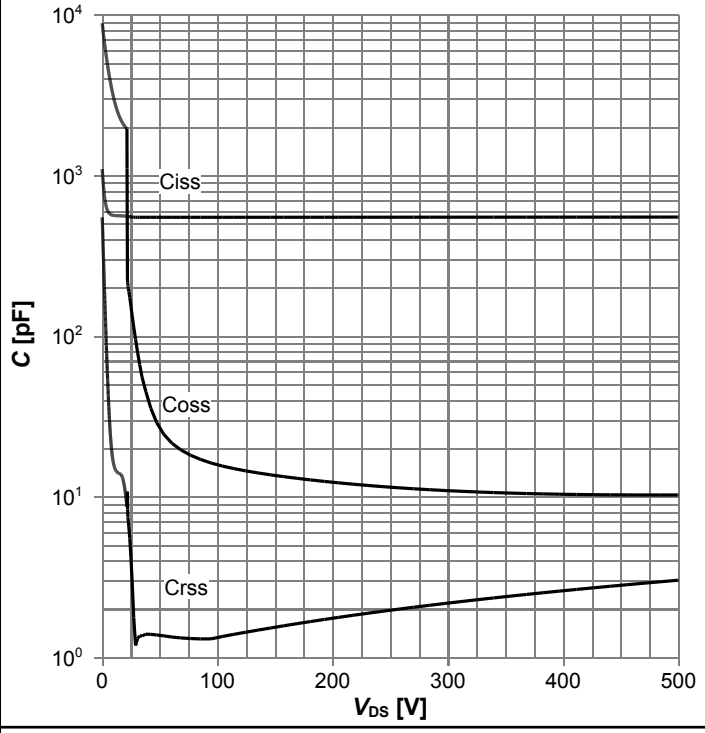

C=f(V_{DS}); V_{GS}=0 V; f=250 kHz

Diagram 15: Typ. Coss stored energy

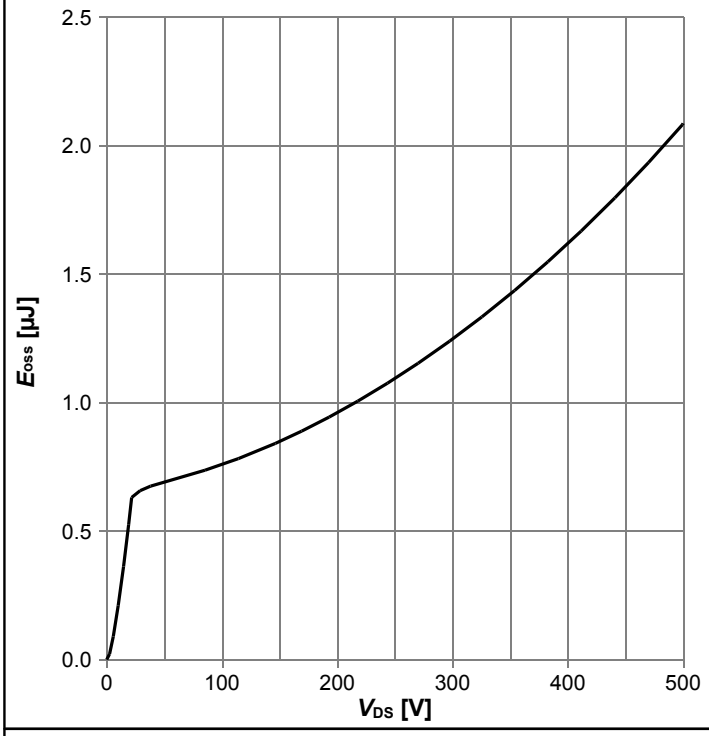

E_{oss}=f(V_{DS})

5 Test Circuits

Table 8 Diode characteristics

Test circuit for diode characteristics	Diode recovery waveform
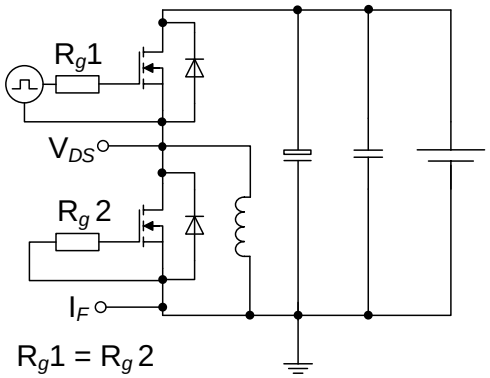	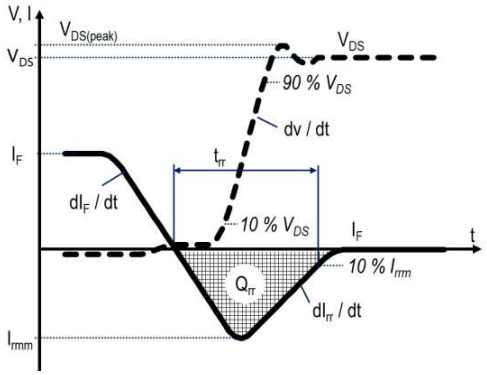

Table 9 Switching times

Switching times test circuit for inductive load	Switching times waveform
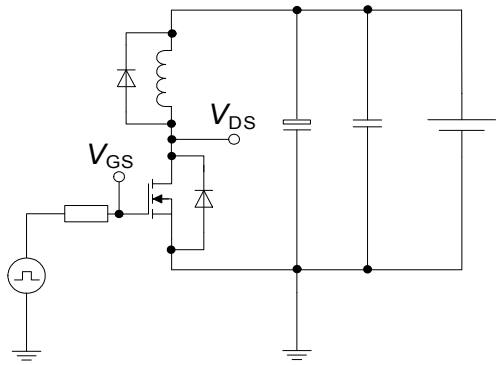	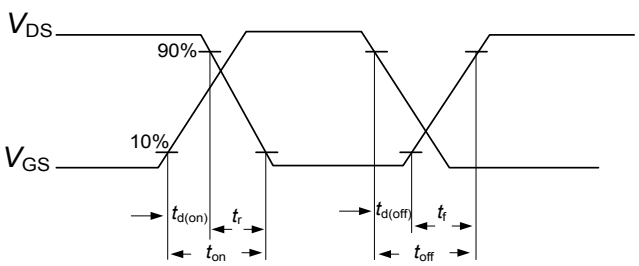

Table 10 Unclamped inductive load

Unclamped inductive load test circuit	Unclamped inductive waveform
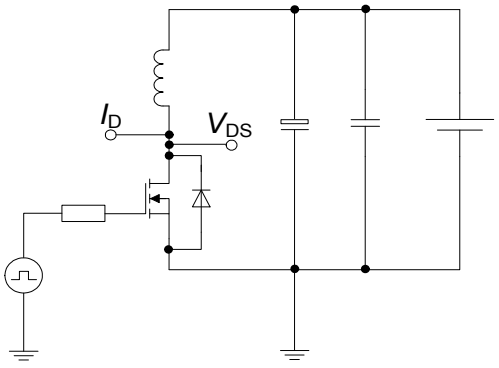	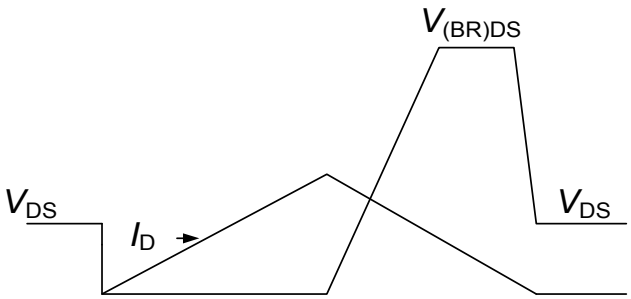

6 Package Outlines

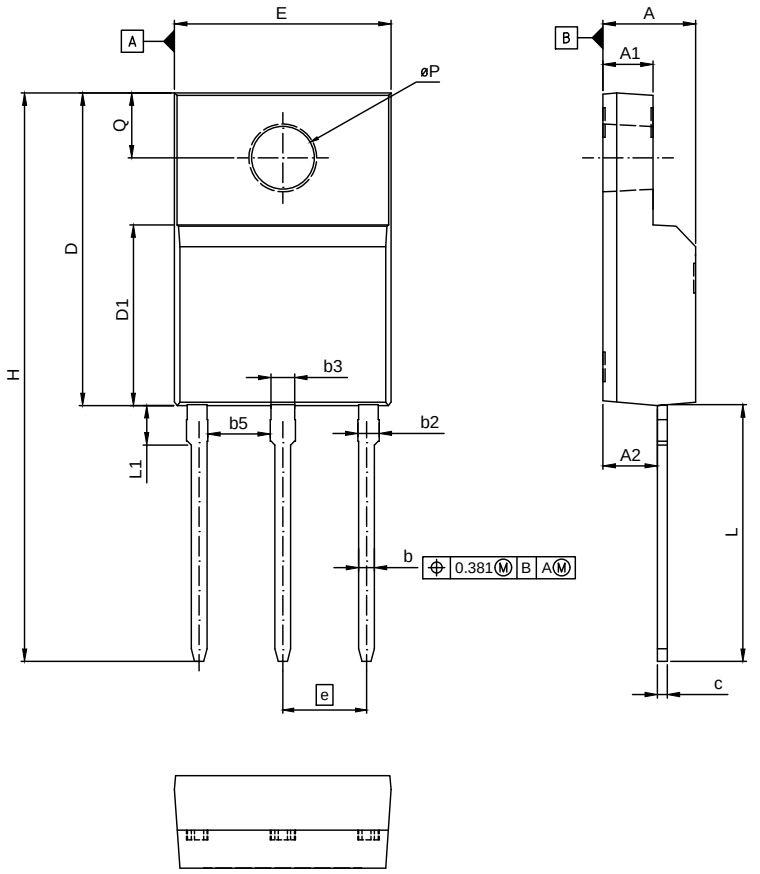

DIMENSIONS DO NOT INCLUDE MOLD FLASH, PROTRUSIONS OR GATE BURRS

DIM	MILLIMETERS		INCHES	
	MIN	MAX	MIN	MAX
A	4.50	4.90	0.177	0.193
A1	2.34	2.74	0.092	0.108
A2	2.65	2.95	0.104	0.116
b	0.75	0.90	0.030	0.035
b2	0.98	1.26	0.039	0.050
b3	1.00	1.40	0.039	0.055
b5	3.00	-	0.118	-
c	0.40	0.60	0.016	0.024
D	15.47	16.27	0.609	0.641
D1	9.17		0.361	
E	10.70	11.30	0.421	0.445
e	4.25 (BSC)		0.167 (BSC)	
N	3		3	
H	28.25	29.45	1.112	1.159
L	12.58	13.38	0.495	0.527
L1	1.70	2.30	0.067	0.091
øP	3.00	3.30	0.118	0.130
Q	3.10	3.50	0.122	0.138

DOCUMENT NO.	Z8B00176938
SCALE	0 2 0 2 4 mm
EUROPEAN PROJECTION	
ISSUE DATE	28-04-2015
REVISION	01

Figure 1 Outline PG -TO220 FullPAK WideCreepage, dimensions in mm/inches

7 Appendix A

Table 11 Related Links

- **IFX CoolMOS P7 Webpage:** www.infineon.com
- **IFX CoolMOS P7 application note:** www.infineon.com
- **IFX CoolMOS P7 simulation model:** www.infineon.com
- **IFX Design tools:** www.infineon.com

Revision History

IPAW60R360P7S

Revision: 2018-06-07, Rev. 2.2

Previous Revision

Revision	Date	Subjects (major changes since last revision)
2.0	2017-02-03	Release of final version
2.1	2017-03-02	Updated Rthjc; ID rating; SOA curves, Zth curves, y-axis lable diagram 8
2.2	2018-06-07	Updated Co(er); Co(tr); Eoss; diagram scalings; Nomenclature of product qualification grade was changed

Trademarks
All referenced product or service names and trademarks are the property of their respective owners.

We Listen to Your Comments
Any information within this document that you feel is wrong, unclear or missing at all? Your feedback will help us to continuously improve the quality of this document. Please send your proposal (including a reference to this document) to:
erratum@infineon.com

Published by
Infineon Technologies AG
81726 München, Germany
© 2018 Infineon Technologies AG
All Rights Reserved.

Legal Disclaimer
The information given in this document shall in no event be regarded as a guarantee of conditions or characteristics (“Beschaffenheitsgarantie”) .

With respect to any examples, hints or any typical values stated herein and/or any information regarding the application of the product, Infineon Technologies hereby disclaims any and all warranties and liabilities of any kind, including without limitation warranties of non-infringement of intellectual property rights of any third party.
In addition, any information given in this document is subject to customer’s compliance with its obligations stated in this document and any applicable legal requirements, norms and standards concerning customer’s products and any use of the product of Infineon Technologies in customer’s applications.
The data contained in this document is exclusively intended for technically trained staff. It is the responsibility of customer’s technical departments to evaluate the suitability of the product for the intended application and the completeness of the product information given in this document with respect to such application.

Information
For further information on technology, delivery terms and conditions and prices please contact your nearest Infineon Technologies Office (**www.infineon.com**).

Warnings
Due to technical requirements, components may contain dangerous substances. For information on the types in question, please contact the nearest Infineon Technologies Office.
The Infineon Technologies component described in this Data Sheet may be used in life-support devices or systems and/or automotive, aviation and aerospace applications or systems only with the express written approval of Infineon Technologies, if a failure of such components can reasonably be expected to cause the failure of that life-support, automotive, aviation and aerospace device or system or to affect the safety or effectiveness of that device or system. Life support devices or systems are intended to be implanted in the human body or to support and/or maintain and sustain and/or protect human life. If they fail, it is reasonable to assume that the health of the user or other persons may be endangered.