IR MOSFET
StrongIRFET™
IRF60B217

Application
- Brushed Motor drive applications
- BLDC Motor drive applications
- Battery powered circuits
- Half-bridge and full-bridge topologies
- Synchronous rectifier applications
- Resonant mode power supplies
- OR-ing and redundant power switches
- DC/DC and AC/DC converters
- DC/AC Inverters

Benefits
- Improved Gate, Avalanche and Dynamic dV/dt Ruggedness
- Fully Characterized Capacitance and Avalanche SOA
- Enhanced body diode dV/dt and dI/dt Capability
- Lead-Free*
- RoHS Compliant, Halogen-Free

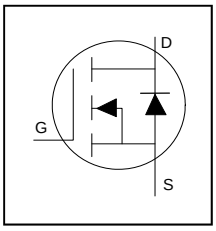

V_{DSS}	60V
$R_{DS(on)}$ typ.	7.3mΩ
max	9.0mΩ
I_D	60A



TO-220AB
IRF60B217

G	D	S
Gate	Drain	Source

Base part number	Package Type	Standard Pack		Orderable Part Number
		Form	Quantity	
IRF60B217	TO-220	Tube	50	IRF60B217

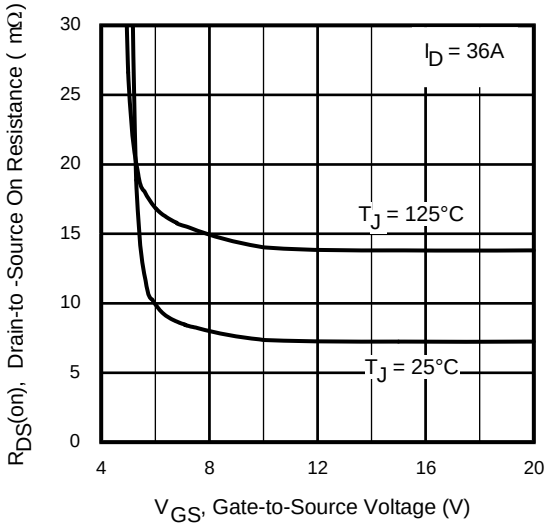

Fig 1. Typical On-Resistance vs. Gate Voltage

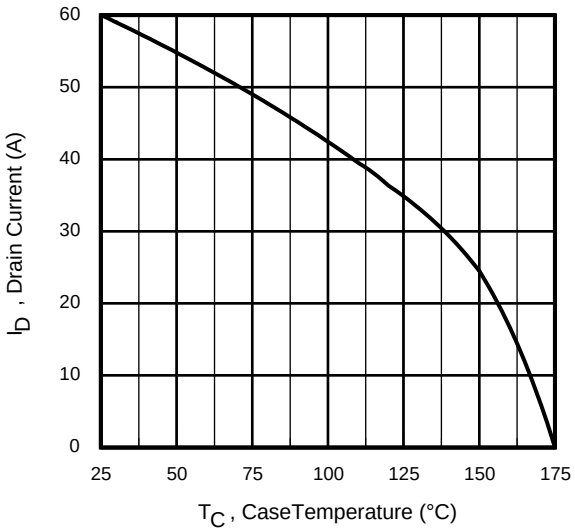

Fig 2. Maximum Drain Current vs. Case Temperature

Absolute Maximum Rating

Symbol	Parameter	Max.	Units
I_D @ T_C = 25°C	Continuous Drain Current, VGS @ 10V (Silicon Limited)	60	A
I_D @ T_C = 100°C	Continuous Drain Current, V_{GS} @ 10V (Silicon Limited)	42	
I_{DM}	Pulsed Drain Current ①	225	
P_D @T_C = 25°C	Maximum Power Dissipation	83	W
	Linear Derating Factor	0.56	W/°C
V_{GS}	Gate-to-Source Voltage	± 20	V
T_J	Operating Junction and Storage Temperature Range	-55 to + 175	°C
	Soldering Temperature, for 10 seconds (1.6mm from case)	300	
	Mounting Torque, 6-32 or M3 Screw	10 lbf·in (1.1 N·m)	

Avalanche Characteristics

$E_{AS\ (Thermally\ limited)}$	Single Pulse Avalanche Energy ②	85	mJ
$E_{AS\ (Thermally\ limited)}$	Single Pulse Avalanche Energy ⑧	124	
I_{AR}	Avalanche Current ①	See Fig 15, 16, 23a, 23b	A
E_{AR}	Repetitive Avalanche Energy ①		mJ

Thermal Resistance

Symbol	Parameter	Typ.	Max.	Units
$R_{\theta JC}$	Junction-to-Case ⑦	—	1.8	°C/W
$R_{\theta CS}$	Case-to-Sink, Flat Greased Surface	0.50	—	
$R_{\theta JA}$	Junction-to-Ambient	—	62	

Static @ T_J = 25°C (unless otherwise specified)

Symbol	Parameter	Min.	Typ.	Max.	Units	Conditions
$V_{(BR)DSS}$	Drain-to-Source Breakdown Voltage	60	—	—	V	V_{GS} = 0V, I_D = 250µA
$\Delta V_{(BR)DSS}/\Delta T_J$	Breakdown Voltage Temp. Coefficient	—	0.047	—	V/°C	Reference to 25°C, I_D = 1mA ①
$R_{DS(on)}$	Static Drain-to-Source On-Resistance	—	7.3	9.0	mΩ	V_{GS} = 10V, I_D = 36A ④
		—	9.0	—		V_{GS} = 6.0V, I_D = 18A ④
$V_{GS(th)}$	Gate Threshold Voltage	2.1	—	3.7	V	V_{DS} = V_{GS}, I_D = 50µA
I_{DSS}	Drain-to-Source Leakage Current	—	—	1.0	µA	V_{DS} =40 V, V_{GS} = 0V
		—	—	150		V_{DS} =40V,V_{GS} = 0V,T_J =125°C
I_{GSS}	Gate-to-Source Forward Leakage	—	—	100	nA	V_{GS} = 20V
	Gate-to-Source Reverse Leakage	—	—	-100		V_{GS} = -20V
R_G	Gate Resistance	—	2.0	—	Ω	

Notes:

① Repetitive rating; pulse width limited by max. junction temperature.

② Limited by T_{Jmax}, starting T_J = 25°C, L = 0.131mH, R_G = 50Ω, I_{AS} = 36A, V_{GS} =10V.

③ $I_{SD} \leq$ 36A, di/dt ≤ 630A/µs, $V_{DD} \leq V_{(BR)DSS}$, $T_J \leq$ 175°C.

④ Pulse width ≤ 400µs; duty cycle ≤ 2%.

⑤ C_{oss} eff. (TR) is a fixed capacitance that gives the same charging time as C_{oss} while V_{DS} is rising from 0 to 80% V_{DSS}.

⑥ C_{oss} eff. (ER) is a fixed capacitance that gives the same energy as C_{oss} while VDS is rising from 0 to 80% V_{DSS}.

⑦ R_θ is measured at T_J approximately 90°C.

⑧ Limited by T_{Jmax}, starting T_J = 25°C, L = 1mH, R_G = 50Ω, I_{AS} = 16A, V_{GS} =10V.

Dynamic Electrical Characteristics @ T_J = 25°C (unless otherwise specified)

Symbol	Parameter	Min.	Typ.	Max.	Units	Conditions
gfs	Forward Transconductance	150	—	—	S	V_{DS} = 10V, I_D =36A
Q_g	Total Gate Charge	—	44	66	nC	I_D = 36A
Q_{gs}	Gate-to-Source Charge	—	12	—		V_{DS} = 30V
Q_{gd}	Gate-to-Drain Charge	—	14	—		V_{GS} = 10V④
Q_{sync}	Total Gate Charge Sync. (Qg– Qgd)	—	30	—		
$t_{d(on)}$	Turn-On Delay Time	—	8.3	—	ns	V_{DD} = 30V
t_r	Rise Time	—	37	—		I_D = 36A
$t_{d(off)}$	Turn-Off Delay Time	—	24	—		R_G= 2.7Ω
t_f	Fall Time	—	20	—		V_{GS} = 10V④
C_{iss}	Input Capacitance	—	2230	—	pF	V_{GS} = 0V
C_{oss}	Output Capacitance	—	215	—		V_{DS} = 25V
C_{rss}	Reverse Transfer Capacitance	—	140	—		f = 1.0MHz, See Fig.7
$C_{oss\ eff.(ER)}$	Effective Output Capacitance (Energy Related)	—	230	—		V_{GS} = 0V, V_{DS} = 0V to 48V⑥
$C_{oss\ eff.(TR)}$	Output Capacitance (Time Related)	—	295	—		V_{GS} = 0V, V_{DS} = 0V to 48V⑤

Diode Characteristics

Symbol	Parameter	Min.	Typ.	Max.	Units	Conditions
I_S	Continuous Source Current (Body Diode)	—	—	60	A	MOSFET symbol showing the integral reverse p-n junction diode. 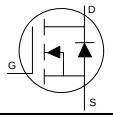
I_{SM}	Pulsed Source Current (Body Diode) ①	—	—	225		
V_{SD}	Diode Forward Voltage	—	0.9	1.2	V	T_J = 25°C,I_S = 36A,V_{GS} = 0V ④
dv/dt	Peak Diode Recovery dv/dt③	—	12	—	V/ns	T_J = 175°C,I_S = 36A,V_{DS} = 40V
t_{rr}	Reverse Recovery Time	—	26	—	ns	T_J = 25°C V_{DD} = 51V
		—	27	—		T_J = 125°C I_F = 36A,
Q_{rr}	Reverse Recovery Charge	—	24	—	nC	T_J = 25°C di/dt = 100A/µs ④
		—	25	—		T_J = 125°C
I_{RRM}	Reverse Recovery Current	—	1.7	—	A	T_J = 25°C

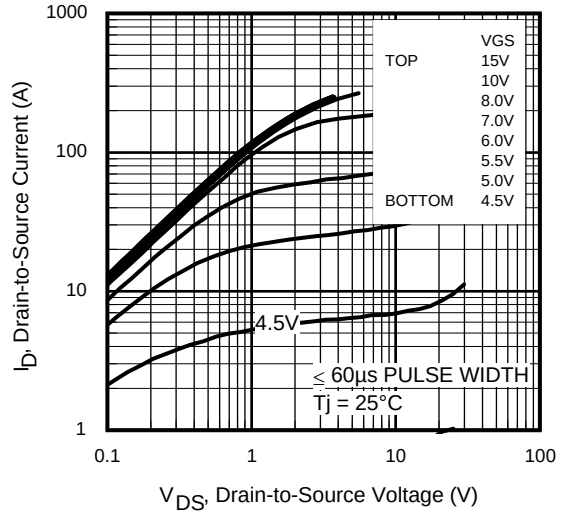

Fig 3. Typical Output Characteristics

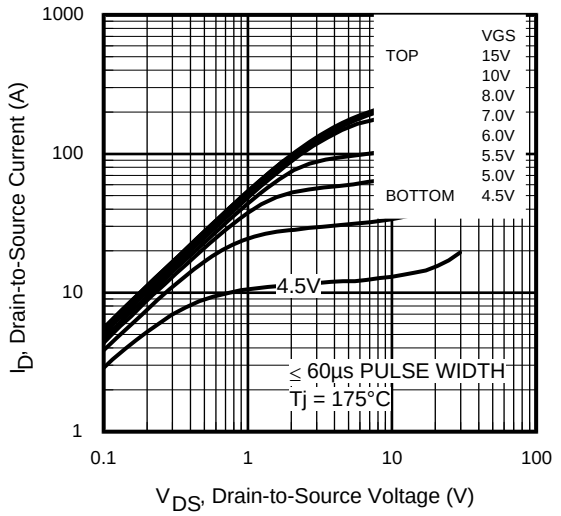

Fig 4. Typical Output Characteristics

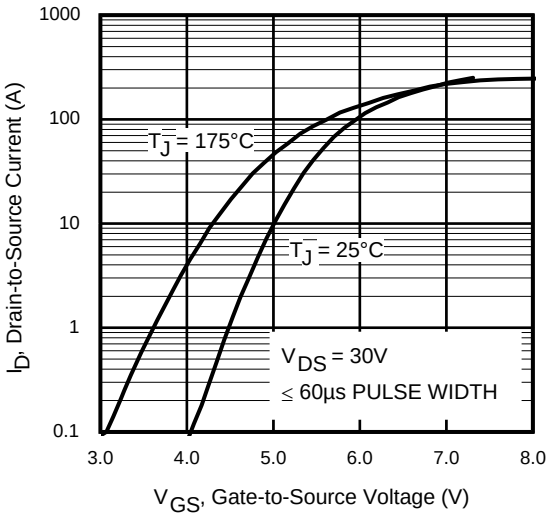

Fig 5. Typical Transfer Characteristics

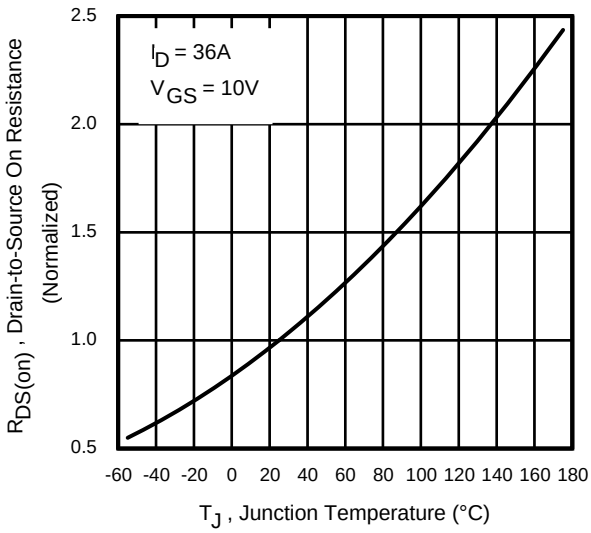

Fig 6. Normalized On-Resistance vs. Temperature

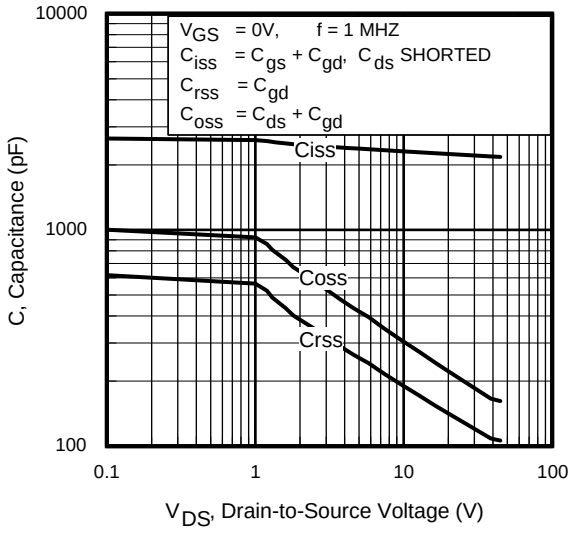

Fig 7. Typical Capacitance vs. Drain-to-Source Voltage

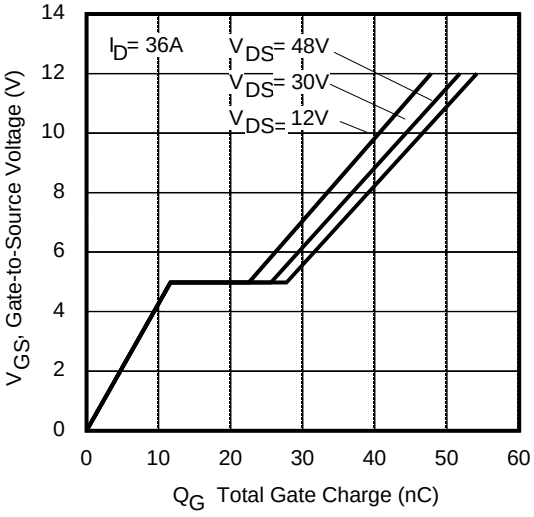

Fig 8. Typical Gate Charge vs. Gate-to-Source Voltage

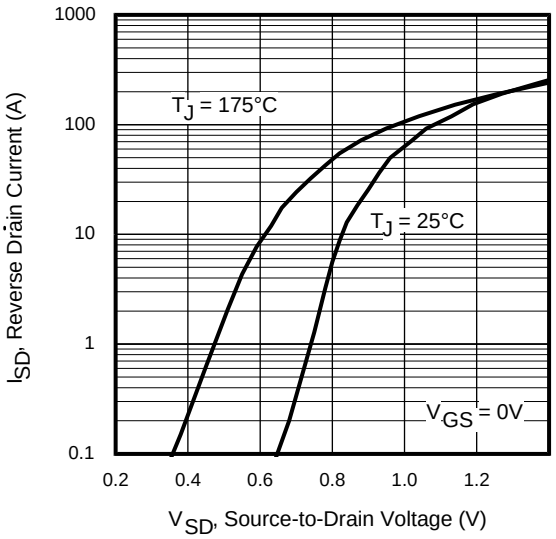

Fig 9. Typical Source-Drain Diode Forward Voltage

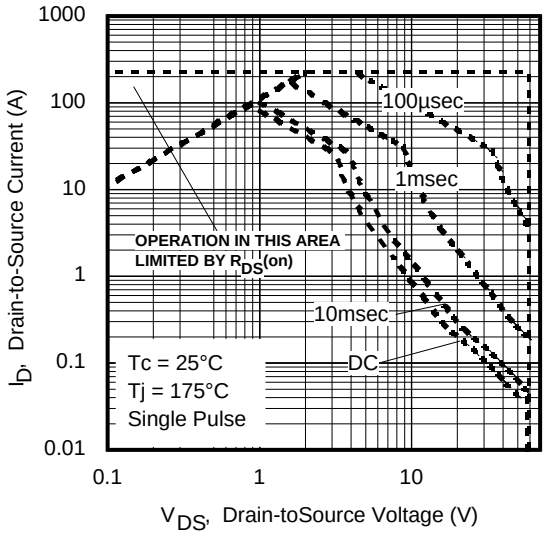

Fig 10. Maximum Safe Operating Area

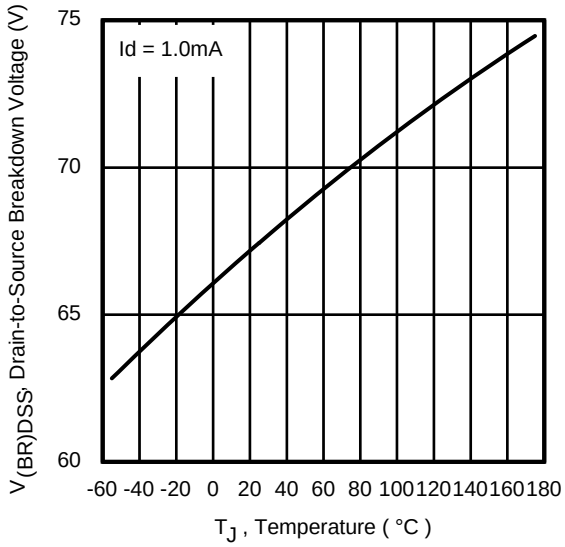

Fig 11. Drain-to-Source Breakdown Voltage

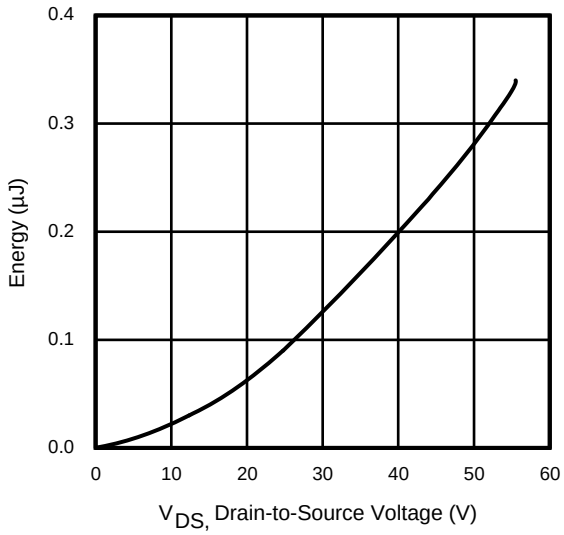

Fig 12. Typical C_{oss} Stored Energy

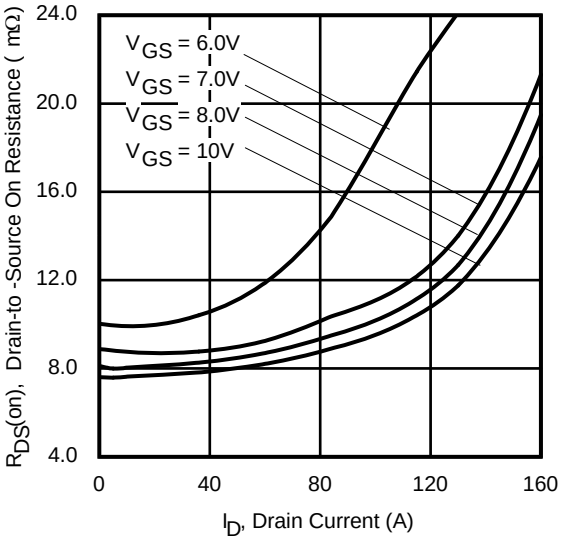

Fig 13. Typical On-Resistance vs. Drain Current

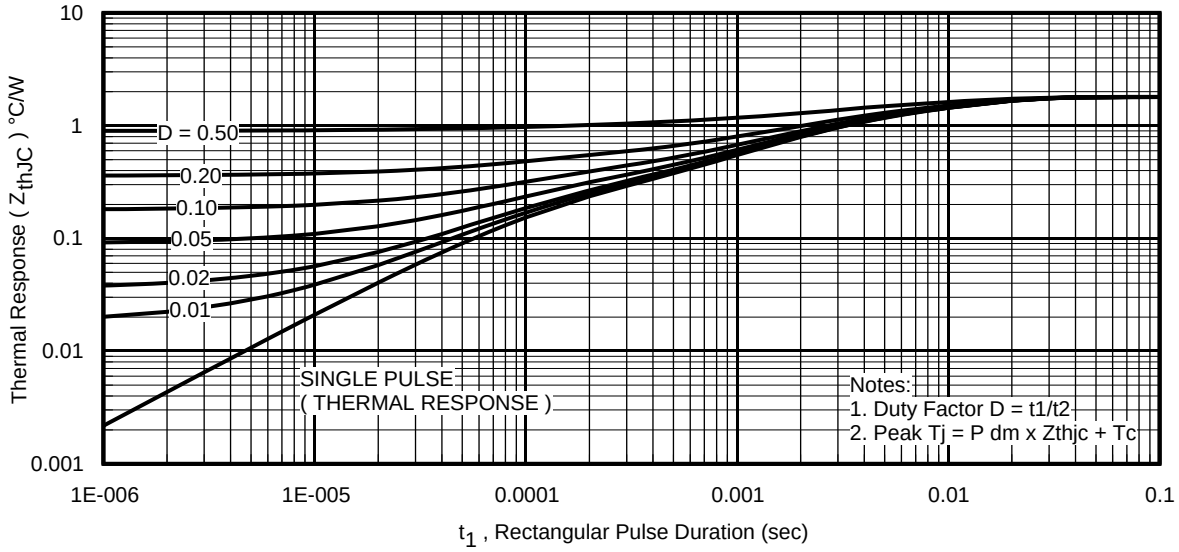

Fig 14. Maximum Effective Transient Thermal Impedance, Junction-to-Case

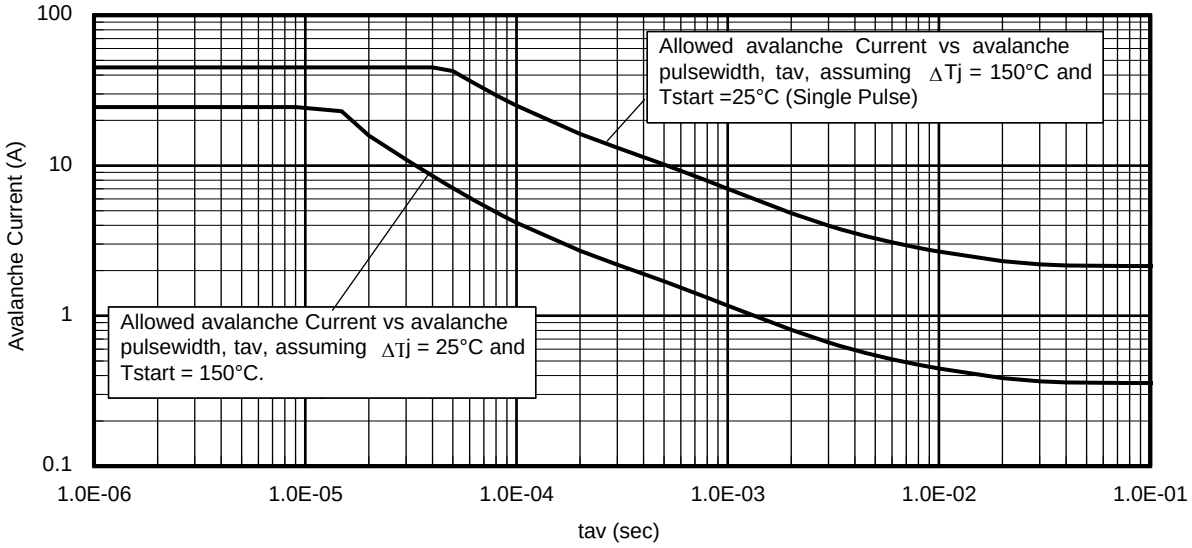

Fig 15. Avalanche Current vs. Pulse Width

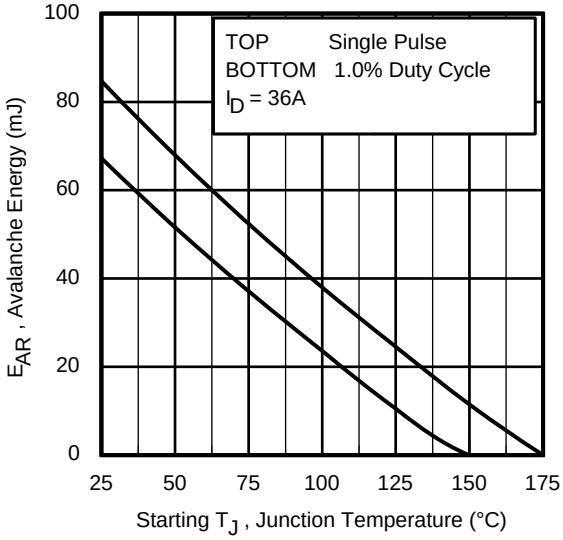

Fig 16. Maximum Avalanche Energy vs. Temperature

Notes on Repetitive Avalanche Curves , Figures 15, 16:
(For further info, see AN-1005 at www.irf.com)

1.Avalanche failures assumption:
Purely a thermal phenomenon and failure occurs at a temperature far in excess of T_{jmax}. This is validated for every part type.

2. Safe operation in Avalanche is allowed as long asT_{jmax} is not exceeded.

3. Equation below based on circuit and waveforms shown in Figures 23a, 23b.

4. $P_{D\ (ave)}$ = Average power dissipation per single avalanche pulse.

5. BV = Rated breakdown voltage (1.3 factor accounts for voltage increase during avalanche).

6. I_{av} = Allowable avalanche current.

7. ΔT = Allowable rise in junction temperature, not to exceed T_{jmax} (assumed as 25°C in Figure 14, 15).

t_{av} = Average time in avalanche.

D = Duty cycle in avalanche = tav ·f

$Z_{thJC}(D, t_{av})$ = Transient thermal resistance, see Figures 14)

PD (ave) = 1/2 (1.3·BV·I_{av}) = $\Delta T/ Z_{thJC}$

$I_{av} = 2\Delta T/ [1.3 \cdot BV \cdot Z_{th}]$

$E_{AS\ (AR)} = P_{D\ (ave)} \cdot t_{av}$

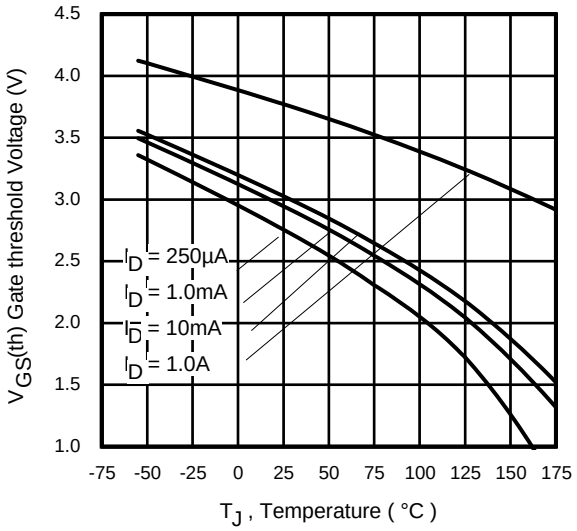

Fig 17. Threshold Voltage vs. Temperature

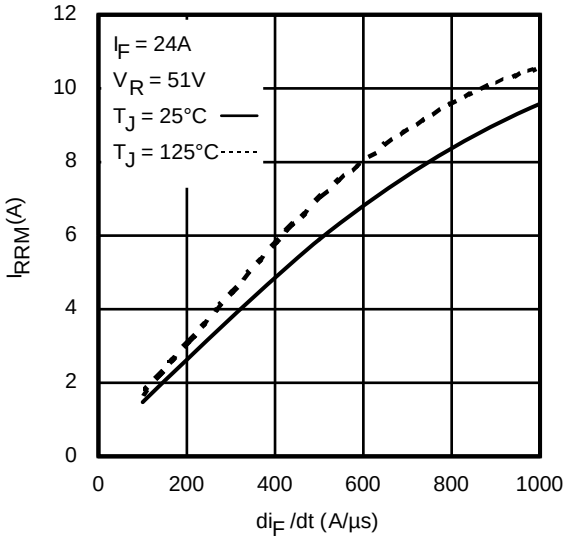

Fig 18. Typical Recovery Current vs. dif/dt

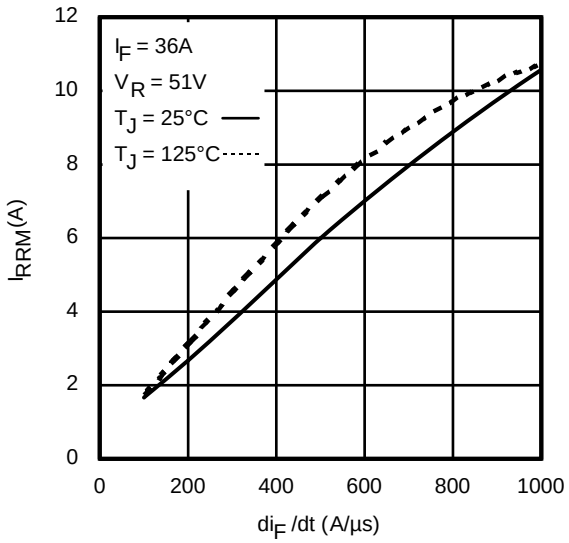

Fig 19. Typical Recovery Current vs. dif/dt

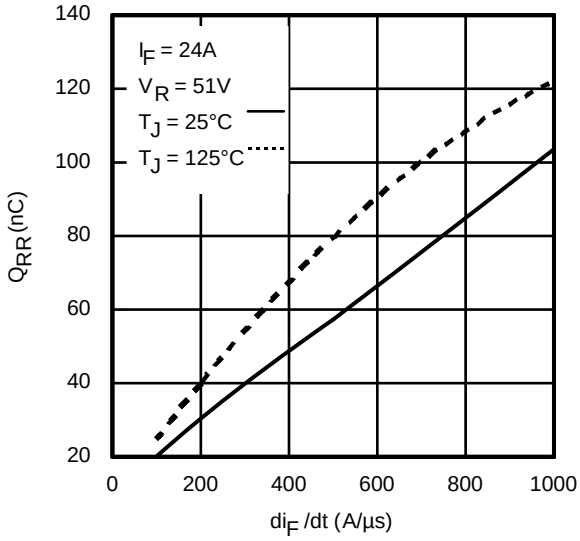

Fig 20. Typical Stored Charge vs. dif/dt

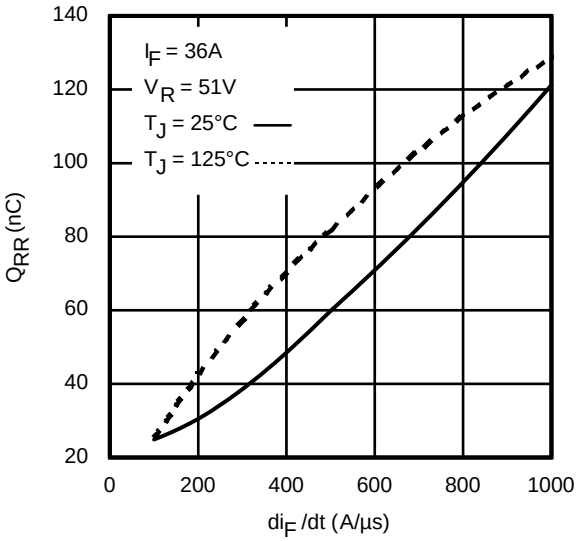

Fig 21. Typical Stored Charge vs. dif/dt

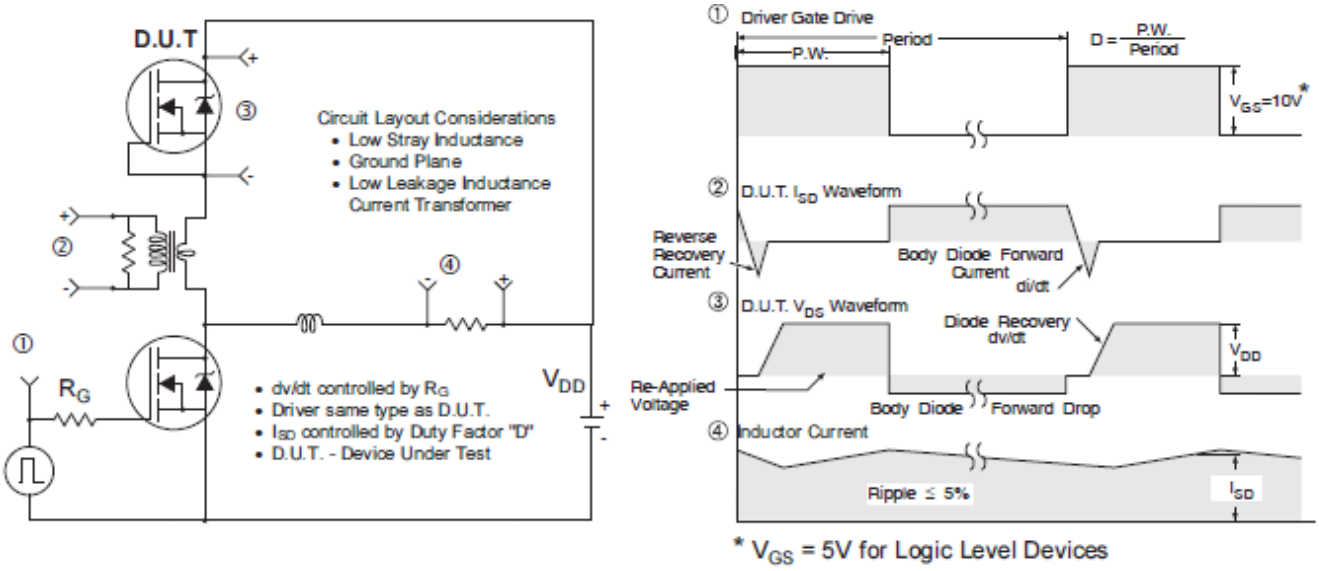

Fig 22. Peak Diode Recovery dv/dt Test Circuit for N-Channel HEXFET® Power MOSFETs

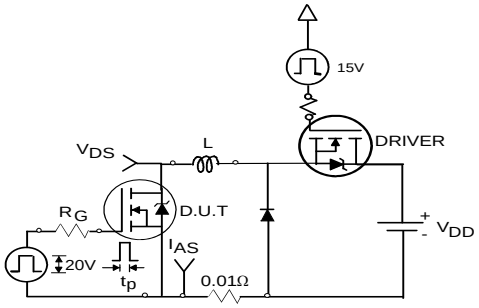

Fig 23a. Unclamped Inductive Test Circuit

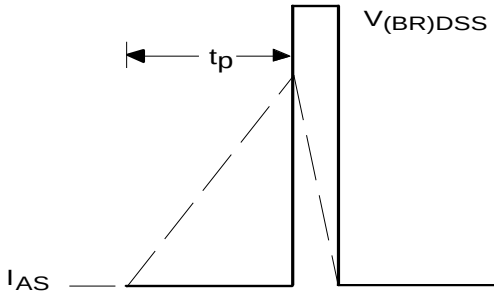

Fig 23b. Unclamped Inductive Waveforms

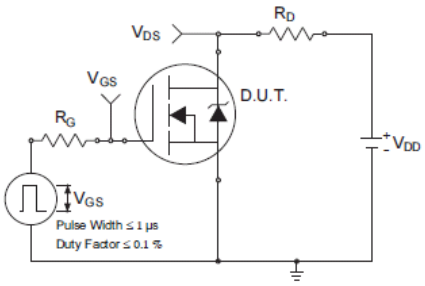

Fig 24a. Switching Time Test Circuit

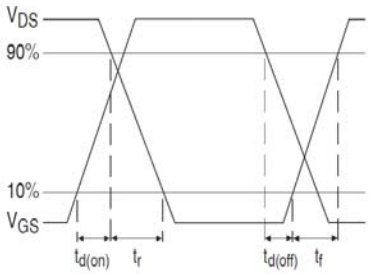

Fig 24b. Switching Time Waveforms

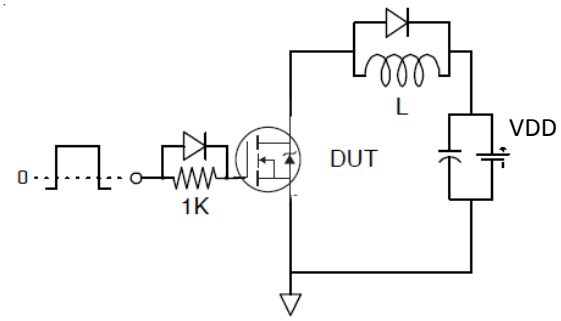

Fig 25a. Gate Charge Test Circuit

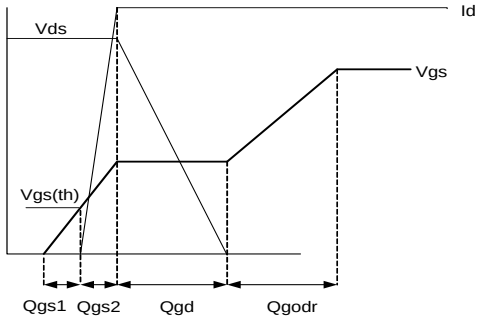

Fig 25b. Gate Charge Waveform

TO-220AB Package Outline (Dimensions are shown in millimeters (inches))

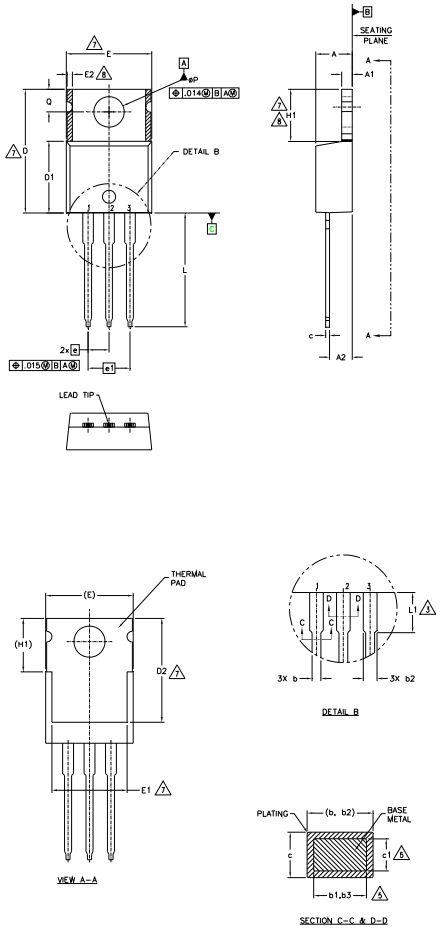

NOTES:

1.– DIMENSIONING AND TOLERANCING AS PER ASME Y14.5 M– 1994.
2.– DIMENSIONS ARE SHOWN IN INCHES [MILLIMETERS].
3.– LEAD DIMENSION AND FINISH UNCONTROLLED IN L1.
4.– DIMENSION D, D1 & E DO NOT INCLUDE MOLD FLASH. MOLD FLASH SHALL NOT EXCEED .005" (0.127) PER SIDE. THESE DIMENSIONS ARE MEASURED AT THE OUTERMOST EXTREMES OF THE PLASTIC BODY.
5.– DIMENSION b1, b3 & c1 APPLY TO BASE METAL ONLY.
6.– CONTROLLING DIMENSION : INCHES.
7.– THERMAL PAD CONTOUR OPTIONAL WITHIN DIMENSIONS E,H1,D2 & E1
8.– DIMENSION E2 X H1 DEFINE A ZONE WHERE STAMPING AND SINGULATION IRREGULARITIES ARE ALLOWED.
9.– OUTLINE CONFORMS TO JEDEC TO-220, EXCEPT A2 (max.) AND D2 (min.) WHERE DIMENSIONS ARE DERIVED FROM THE ACTUAL PACKAGE OUTLINE.

SYMBOL	DIMENSIONS				NOTES
	MILLIMETERS		INCHES		
	MIN.	MAX.	MIN.	MAX.	
A	3.56	4.83	.140	.190	
A1	1.14	1.40	.045	.055	
A2	2.03	2.92	.080	.115	
b	0.38	1.01	.015	.040	
b1	0.38	0.97	.015	.038	5
b2	1.14	1.78	.045	.070	
b3	1.14	1.73	.045	.068	5
c	0.36	0.61	.014	.024	
c1	0.36	0.56	.014	.022	5
D	14.22	16.51	.560	.650	4
D1	8.38	9.02	.330	.355	
D2	11.68	12.88	.460	.507	7
E	9.65	10.67	.380	.420	4,7
E1	6.86	8.89	.270	.350	7
E2	–	0.76	–	.030	8
e	2.54 BSC		.100 BSC		
e1	5.08 BSC		.200 BSC		
H1	5.84	6.86	.230	.270	7,8
L	12.70	14.73	.500	.580	
L1	3.56	4.06	.140	.160	3
øP	3.54	4.08	.139	.161	
Q	2.54	3.42	.100	.135	

LEAD ASSIGNMENTS

HEXFET

1.– GATE
2.– DRAIN
3.– SOURCE

IGBTs, CoPACK

1.– GATE
2.– COLLECTOR
3.– EMITTER

DIODES

1.– ANODE
2.– CATHODE
3.– ANODE

TO-220AB Part Marking Information

EXAMPLE: THIS IS AN IRF1010
LOT CODE 1789
ASSEMBLED ON WW 19, 2000
IN THE ASSEMBLY LINE "C"

Note: "P" in assembly line position
indicates "Lead - Free"

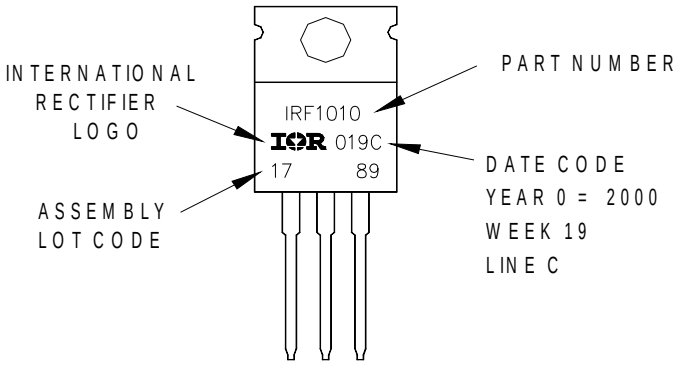

TO-220AB packages are not recommended for Surface Mount Application.

Note: For the most current drawing please refer to IR website at http://www.irf.com/package/

Qualification Information†

Qualification Level	Industrial (per JEDEC JESD47F) ††	
Moisture Sensitivity Level	TO-220	N/A
RoHS Compliant	Yes	

† Qualification standards can be found at International Rectifier's web site: http://www.irf.com/product-info/reliability/

†† Applicable version of JEDEC standard at the time of product release.

Published by
Infineon Technologies AG
81726 München, Germany
© Infineon Technologies AG 2015
All Rights Reserved.

IMPORTANT NOTICE

The information given in this document shall in no event be regarded as a guarantee of conditions or characteristics ("Beschaffenheitsgarantie"). With respect to any examples, hints or any typical values stated herein and/or any information regarding the application of the product, Infineon Technologies hereby disclaims any and all warranties and liabilities of any kind, including without limitation warranties of non-infringement of intellectual property rights of any third party.

In addition, any information given in this document is subject to customer's compliance with its obligations stated in this document and any applicable legal requirements, norms and standards concerning customer's products and any use of the product of Infineon Technologies in customer's applications.

The data contained in this document is exclusively intended for technically trained staff. It is the responsibility of customer's technical departments to evaluate the suitability of the product for the intended application and the completeness of the product information given in this document with respect to such application.

For further information on the product, technology, delivery terms and conditions and prices please contact your nearest Infineon Technologies office (www.infineon.com).

WARNINGS

Due to technical requirements products may contain dangerous substances. For information on the types in question please contact your nearest Infineon Technologies office.

Except as otherwise explicitly approved by Infineon Technologies in a written document signed by authorized representatives of Infineon Technologies, Infineon Technologies' products may not be used in any applications where a failure of the product or any consequences of the use thereof can reasonably be expected to result in personal injury.