Z8F63697694

Never stop thinking

TLE9461-3ES / TLE9471-3ES Evaluation Board

Lite SBC Family

Getting Started

Rev 1.0, December 2018

Automotive Power

Revision History: 1

Previous Version: none

Page	Subjects (major changes since last revision)
1.0	Initial Release, All.

Table of Contents

1. Evaluation Board Overview 4

2. Banana Jacks 4

3. Buttons 4

4. LEDs 4

5. Connectors 5
5.1. uIO Connector 5

6. Jumper Configurations 6
6.1. Power Supply Configuration 6
6.2. General Configuration: INTN and TEST pins 7
6.3. Jumpers to connect/disconnect the Vccx LEDs 8
6.4. Configuration related to the WK/VSENSE and FO/GPIO pins 9
6.5. CAN termination 12

7 Charge Pump ..... Error! Bookmark not defined.

8 Layout and Materials Details 14

9 Appendix 17
9.1 Schematics Evaluation Board (TLE9461) 17
9.2 Schematics Evaluation Board (TLE9471) ..... **Error! Bookmark not defined.**
9.3 Layout Evaluation Board (with Overlay) 17
9.4 Layout Evaluation Board (Top layer) 18
9.5 Layout Evaluation Board (Bottom layer) 18

10 Additional Information 19

1. Evaluation Board Overview

There are 2 banana jacks, 4 LEDs, one wake up button, one connector for the uIO and a set of headers for jumper configurations on the evaluation board. The functionality behind these components is explained in the following chapters. The distribution of these elements on the board can be observed in the figure below:

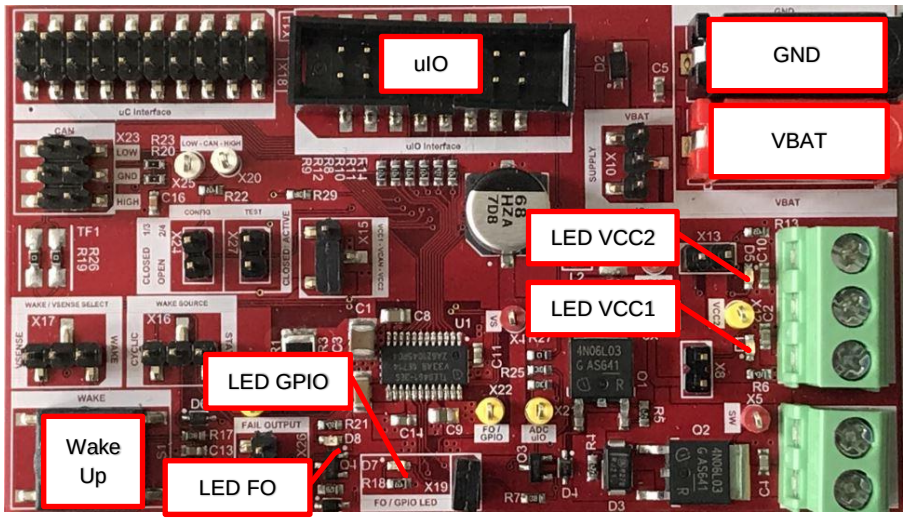

Figure 1: Board overview

2. Banana Jacks

The SBC is usually supplied through the VBAT (X6, typ 13.5 V) and **GND** (X9) banana jacks (alternatively see Chapter 6.1 to supply it with the uIO stick).
The VCC1 (X11, 5 V or 3.3 V, depending on the SBC's version) and VCC2 (X11, 5 V) screw terminals provide the regulated output voltages of the SBC. The voltages VCC1 and VCC2 are simultaneously used to support signal LEDs at the output clamps.
The charge pump stage of the SBC drives two MOSFETS at the evalboard. One to protect SW against reverse polarity, the other is used as a VBAT power switch, supporting the SW (X7) terminal.

3. Buttons

The wake up button (WK) wakes up the SBC (from Sleep and/or Fail Safe Mode), if the corresponding jumpers are properly configured (see Chapter 6.4 for more information).

4. LED's

The LED FO (D8) and LED GPIO (D7) indicate the voltage level of the FO/GPIO pins, if the corresponding jumpers are properly configured (see Chapter 6.4 for more information).
The VCC1 LED (D1) lights, if VCC1 is enabled and the VCC2 LED (D5), if VCC2 is enabled, if the corresponding jumpers are connected (see Chapter 6.3 for more information). Only one LED (LED FO or LED GPIO) can be used at a time.

5. Connectors

5.1. µIO Connector

The µIO Connector corresponds to the X14 on the board. The pin distribution of the connector is shown in the following figure:

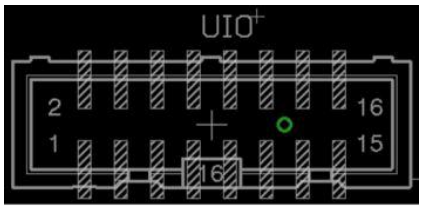

Figure 2: X14 µIO connector

The functionality of the X14's pins is detailed in the following table:

Pin	Functionality	Pin	Functionality
1	NC	2	GND
3	NC	4	NC
5	NC	6	VS_UIO
7	NC	8	INTN
9	CSN	10	NC
11	CLK	12	FO_UC
13	SDO	14	RSTN
15	SDI	16	ADC_UIO

Table 1: Pins of the µIO connector

6. Jumper Configurations

6.1. Power Supply Configuration

The SBC can be supplied with VBAT (typical use case) or through the 12V provided by the uIO (if plugged in and connected to a USB port). This can be configured with the jumper X10, located close to the reset button:

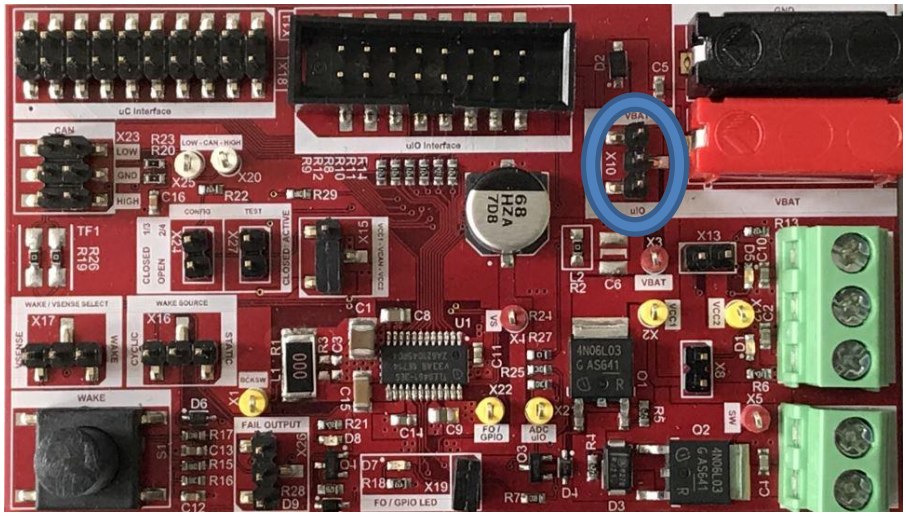

Figure 3: Jumper to configure the SBC´s power supply

The possible configurations are as follows:

	X10
SBC supplied through Vbat (12 V)	Connect VBAT
SBC supplied through uIO (12 V)	Connect VSUP and VS_UIO

Table 2: X10 Cofiguration

6.2. General Configuration: INTN and TEST pins

These jumpers are located at the left side of the board:

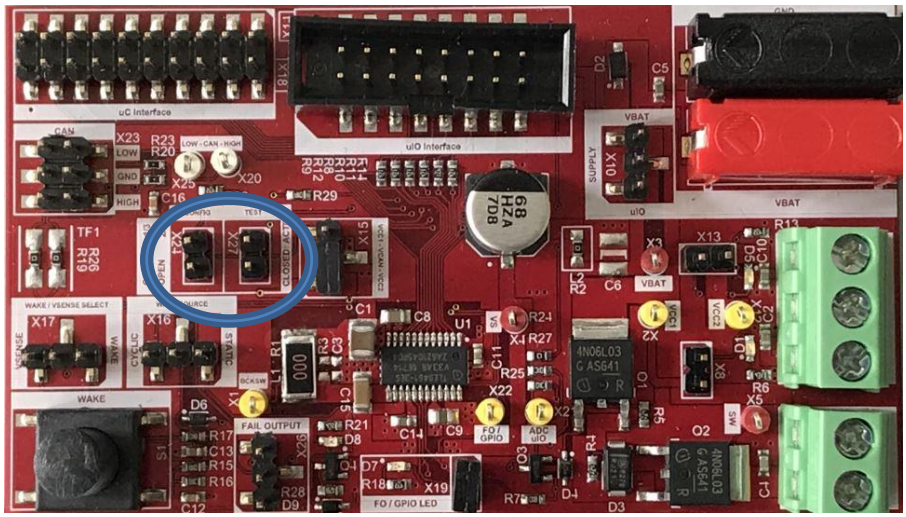

Figure 4: Jumpers for SBC configuration purposes

The jumper X24 allows to select the hardware configuration of the SBC (configuration 1/3 or 2/4):

	X24
Config 1/3	Connect INTN and Vcc1
Config 2/4	Leave open

Table 3: X24 Cofiguration

Through the jumper X27 the operation mode of the SBC can be selected:

	X27
Development Mode	Connect Vcc1 and TEST (*no need to start watchdog*)
User Mode	Leave open

Table 4: X27 Cofiguration

6.3. Jumpers to connect/disconnect the VCCx LEDs

These jumpers are located at the left bottom of the board:

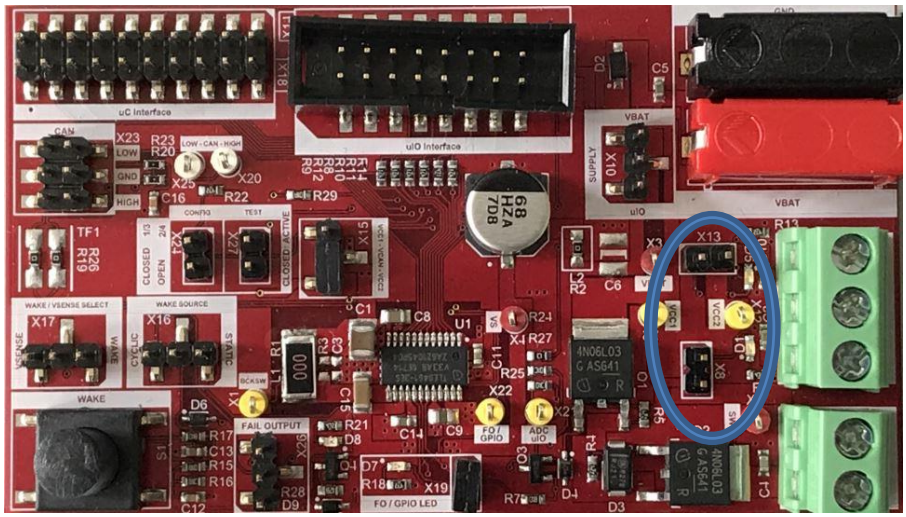

Figure 5: Jumpers for the Vccx LEDs

If X13 is connected and VCC2 is enabled, the VCC2 LED (D5) shines. In the same manner, if X8 is connected and VCC1 is enabled, the VCC1 LED (D1) shines.

6.4. Configuration of the WK/VSENSE and FO/GPIO pins

These jumpers are located at the top right corner of the board:

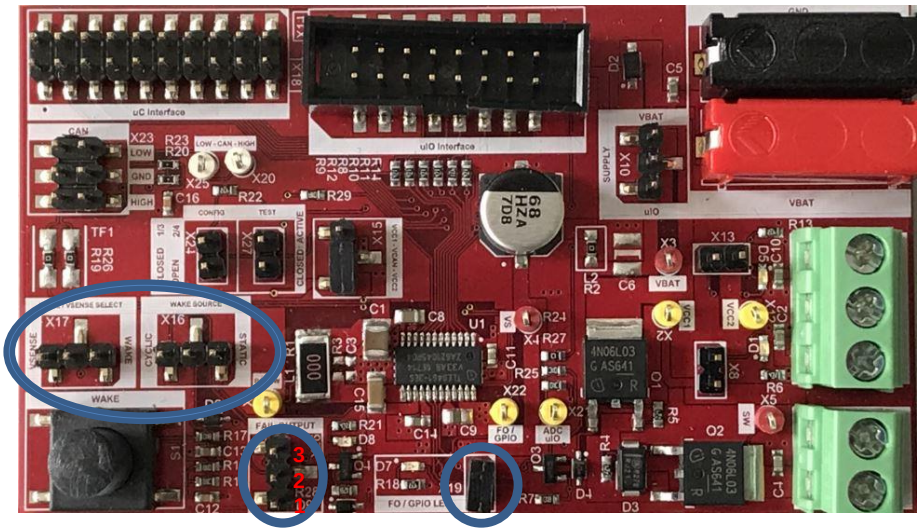

Figure 6: Jumpers related to the WK/VSENSE and FO/GPIO pins

The possible configurations are shown in the following table. Note, that these are the only possible configurations due to the fact that functionalities are multiplexed:

	X26: FAIL OUTPUT	X16: WAKE SOURCE	X17: WAKE / VSENSE SELECT	X19: FO/GPIO LED
V_S Sense	Connect Pin 2+3	Open	Connect Pin 2+3	Open
Cyclic Sense	Open	Connect Pin 2+3	Connect Pin 1+2	Open
Regular wake up (wake up through wake up button)	Open	Connect Pin 1+2	Connect Pin 1+2	Open
GPIO as HS (LED D7 as load)	Open	Open	Open	Closed
FO (LED D8)	Connect Pin 1+2	Open	Open	Open
Regular wake up and FO	Connect Pin 1+2	Connect Pin 1+2	Connect Pin 1+2	Open
Regular wake up and GPIO as HS	Open	Connect Pin 1+2	Connect Pin 1+2	Closed

Table 5: Configurations related to the WK/VSENSE and FO/GPIO pins

V_S Sense:

For the voltage sensing, check the “Voltage Sensing” button in the config wizard.

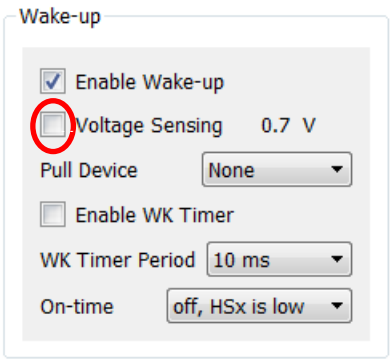

Cyclic Sense:

For the cyclic sensing, choose “High-Side Timer” from the drop-down menu at GPIO.

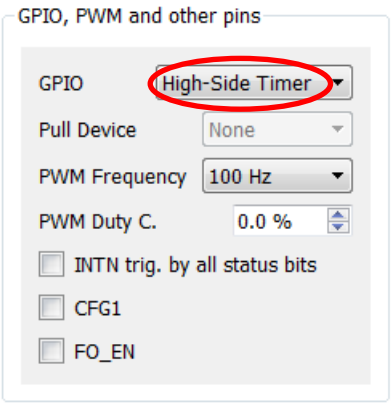

Regular wake-up:

For the regular wake-up, press the “Soft Reset” button in the Mode section.

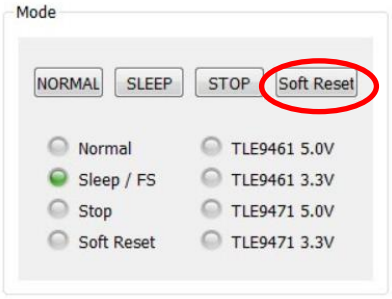

GPIO as HS (LED D7 as load):

For GPIO as HS switch, choose High-Side PWM in the GPIO field and chose the PWM Duty Cycle.

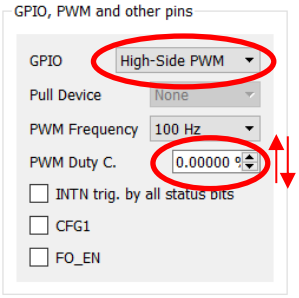

FO (LED D8):

For the failure output, choose “Failure Output” from the drop-down menu at GPIO.

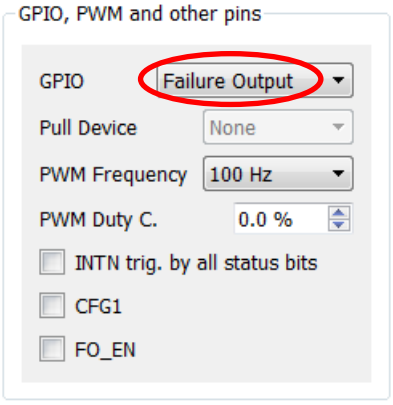

6.5. CAN connector

The connector for CANH and CANL is X23. The CAN terminations are fixed.

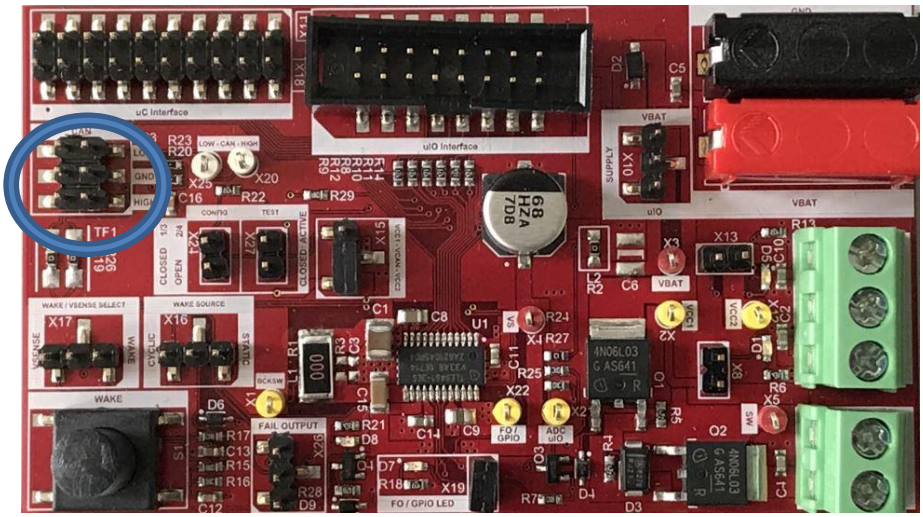

Figure 7: Jumper for the CAN terminations

For proper termination of the CAN bus, two 62Ω resistors are connected in series, differentially between CANH and CANL. In addition, there is a 4.7nF capacitor supporting bus-symmetry during data-transmission.

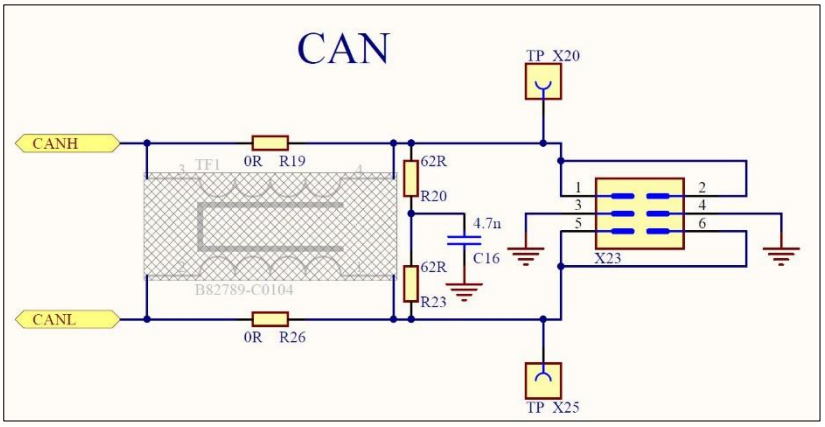

Figure 8: CAN termination

In case, a Common Mode Choke (CMC) is considered to further improve electromagnetic compatibility / immunity, a landing pattern is designated, either using R19 and R26 or replacing it with the CMC.

7 Charge Pump

The internal charge pump provides a gate control voltage for VBAT connected NMOS transistors. This allows the smart control of a reverse polarity protection circuit and or a VBATpower switch.

As a switched power connection example, a DC Motor can be connected to the TLE9461 / TLE9471 board through the SW and GND (X7) pins as shown in Figure 10:

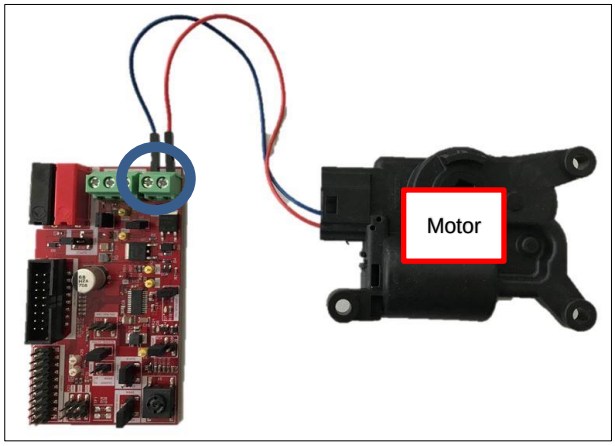

Figure 10: DC Motor connection to the board

In order to start the motor, press the “Soft Reset” button and check the “Charge Pump” box in the Config Wizard.

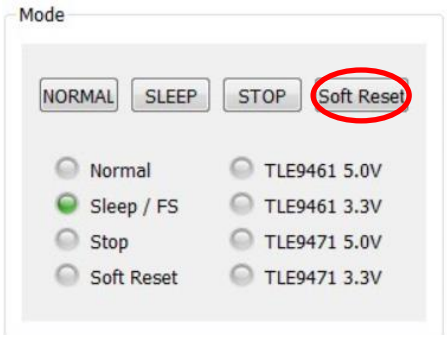

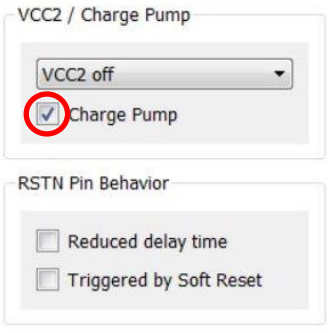

Note: For more information, plese check chapter 14 in the datasheet.

8 Layout and Materials Details

In the following table, all the devices used on the board (BOM) are described in detail:

Item	Value	Package Reference	Manufacturer	Part Number
C1	2.2u (TLE9461)	1210	Kemet	C1210C225K4RAC
C1	22u (TLE9471)	1210	Kemet	C1210C226K4RAC
C2	100n	0603	AVX	06035C104K4Z2A
C3	220p	0603	Kemet	C0603C221F1GAC
C4	100n	0603	AVX	06035C104K4Z2A
C5	100n	0603	AVX	06035C104K4Z2A
C6	4.7u	1210	Kemet	C1210C475M5RAC
C7	68u	F	Panasonic	EEHZA1H680P
C8	10n	0805	AVX	0805YC103K4Z2A
C9	2.2u	0805	Kemet	C0805C225K4RAC
C10	100n	0603	AVX	06035C104K4Z2A
C11	1u	0603	muRata	GRM188R71E105KA12D
C12	10n	0603	Kemet	C0603C103K5GAC
C13	100n	0603	AVX	06035C104K4Z2A
C14	100n	0603	AVX	06035C104K4Z2A
C15	1u	1206	Kemet	C1206C105K5RAC
C16	4.7n	0603	Kemet	C0603C472F8GAC
D1		0603	OSRAM Opto Semiconductors	LG Q971-KN-1
D2		SOD-123	Micro Commercial Components	MBR0560-TP
D3		DO-214AC	ON Semiconductor	SZ1SMA5927BT3
D4		SOD-323	ON Semiconductor	BAS21HT1G
D5		0603	OSRAM Opto Semiconductors	LG Q971-KN-1
D6		SOD-323	ON Semiconductor	BAS21HT1G
D7		0603	OSRAM Opto Semiconductors	LS L29K-H1J2-1
D8		0603	OSRAM Opto Semiconductors	LS L29K-H1J2-1
D9		SOD-323	Vishay General Semiconductor	GDZ5V1B-G3-08
L1	10µH	4532 (1812)	muRata	LQH43PB100M26#
L2	2.2uH	SMD	Murata	1227AS-H-2R2M=P2
Q1	IPD90N06S4L-03	PG-TO252-3-11	Infineon Technologies	IPD90N06S4L-03
Q2	IPD90N06S4L-03	PG-TO252-3-11	Infineon Technologies	IPD90N06S4L-03
Q3	BCR183	SOT23	Infineon Technologies	BCR183E6327HTSA1
Q4	BCR183	SOT23	Infineon Technologies	BCR183E6327HTSA1
R1	0R	2512	Yageo/Phycomp	
R2	0R	0603	Yageo/Phycomp	RC0603JR-070RL
R3	10R	0603	Yageo/Phycomp	RC0603FR-0710RL
R4	220k	0603	Yageo/Phycomp	RC0603FR-07K
R5	220k	0603	Yageo/Phycomp	RC0603FR-07K
R6	4.7k	0603	Yageo/Phycomp	RC0603FR-074K7L
R7	1.0k	0603	Yageo/Phycomp	RC0603FR-071KL

Item	Value	Package Reference	Manufacturer	Part Number
R8	470R	0603	Yageo/Phycomp	RC0603FR-07470R
R9	470R	0603	Yageo/Phycomp	RC0603FR-07470R
R10	470R	0603	Yageo/Phycomp	RC0603FR-07470R
R11	470R	0603	Yageo/Phycomp	RC0603FR-07470R
R12	470R	0603	Yageo/Phycomp	RC0603FR-07470R
R13	4.7k	0603	Yageo/Phycomp	RC0603FR-074K7L
R14	470R	0603	Yageo/Phycomp	RC0603FR-07470R
R15	1.0k	0603	Yageo/Phycomp	RC0603FR-071KL
R16	10k	0603	Yageo/Phycomp	RC0603FR-0710KL
R17	1.0k	0603	Yageo/Phycomp	RC0603FR-071KL
R18	4.7k	0603	Yageo/Phycomp	RC0603FR-074K7L
R19	0R	0603	Yageo/Phycomp	RC0603JR-070RL
R20	62R	0603	Vishay	CRCW060362R0FKED
R21	4.7k	0603	Yageo/Phycomp	RC0603FR-074K7L
R22	4.7k	0603	Yageo/Phycomp	RC0603FR-074K7L
R23	62R	0603	Vishay	CRCW060362R0FKED
R24	0R	0603	Yageo/Phycomp	RC0603JR-070RL
R25	10k	0603	Yageo/Phycomp	RC0603FR-0710KL
R26	0R	0603	Yageo/Phycomp	RC0603JR-070RL
R27	10k	0603	Yageo/Phycomp	RC0603FR-0710KL
R28	1.3k	0603	Yageo/Phycomp	AC0603FR-071K3L
R29	100R	0603	Yageo/Phycomp	RC0603FR-07100RL
S1			Multimec	3ESH9-15.0
X1	5004		Keystone	5004
X2	5004		Keystone	5004
X3	5000		Keystone	5000
X4	5000		Keystone	5000
X5	5000		Keystone	5000
X6	PB4 Red		Hirschmann Test & Measurement	973 582-101
X7	1935776		Phoenix Contact	1935776
X8	TSM-102-01-S-SV		Samtec	TSM-102-01-S-SV
X9	PB4 Black		Hirschmann Test & Measurement	973 582-100
X10	TSM-103-01-L-SV-TR		Samtec	TSM-103-01-L-SV-TR
X11	1935789		Phoenix Contact	1935789
X12	5004		Keystone	5004
X13	TSM-102-01-S-SV		Samtec	TSM-102-01-S-SV
X14	HTST-108-01-L-DV		Samtec	HTST-108-01-L-DV
X15	TSM-103-01-L-SV-TR		Samtec	TSM-103-01-L-SV-TR

Item	Value	Package Reference	Manufacturer	Part Number
X16	TSM-103-01-L-SV-TR		Samtec	TSM-103-01-L-SV-TR
X17	TSM-103-01-L-SV-TR		Samtec	TSM-103-01-L-SV-TR
X18	TSM-110-03-S-DV		Samtec	TSM-110-03-S-DV
X19	TSM-102-01-S-SV		Samtec	TSM-102-01-S-SV
X20	5002		Keystone	5002
X21	5004		Keystone	5004
X22	5004		Keystone	5004
X23	TSM-103-01-T-DV		Samtec	TSM-103-01-T-DV
X24	TSM-102-01-S-SV		Samtec	TSM-102-01-S-SV
X25	5002		Keystone	5002
X26	TSM-103-01-L-SV-TR		Samtec	TSM-103-01-L-SV-TR
X27	TSM-102-01-S-SV		Samtec	TSM-102-01-S-SV

Table 6: BOM details

9 Appendix

9.1 Schematics of the Evaluation Board (TLE9461 & TLE9471)

Please find these schematics attached at the end of the document.

9.2 Layout Evaluation Board (with Overlay)

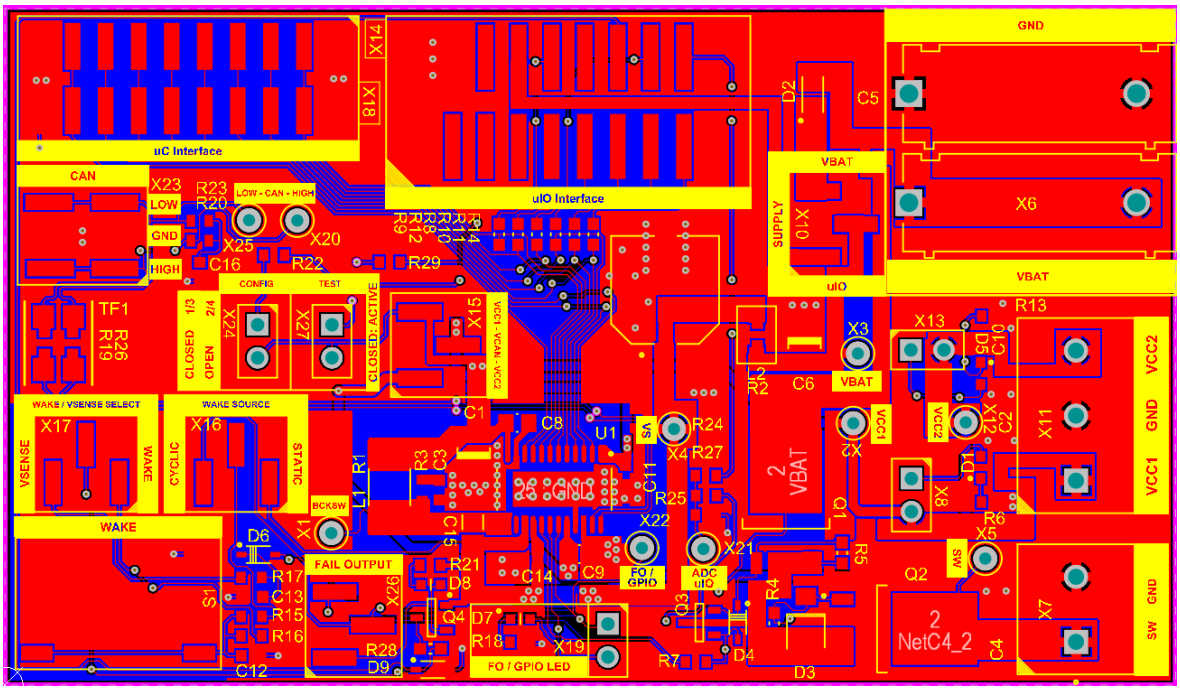

Figure 13: Overlay view of TLE9461-3ES /TLE9471-3ES

9.3 Layout Evaluation Board (Top layer)

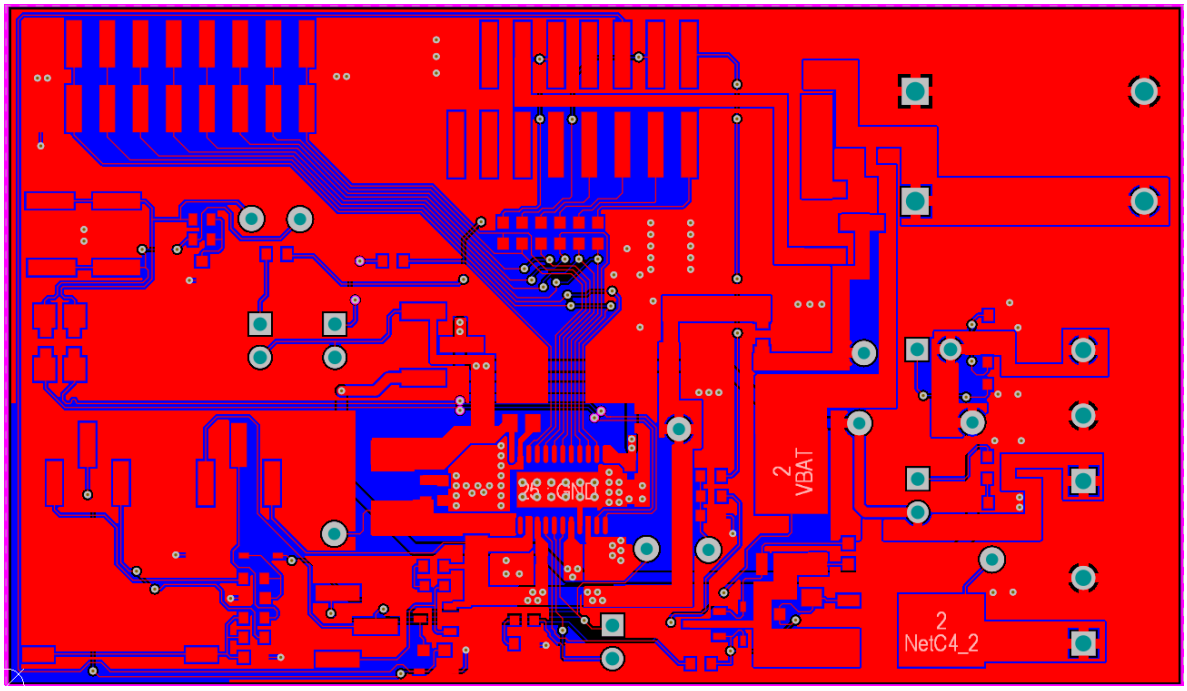

Figure 14: Top view of TLE9461-3ES / TLE9471-3ES

9.4 Layout Evaluation Board (Bottom layer)

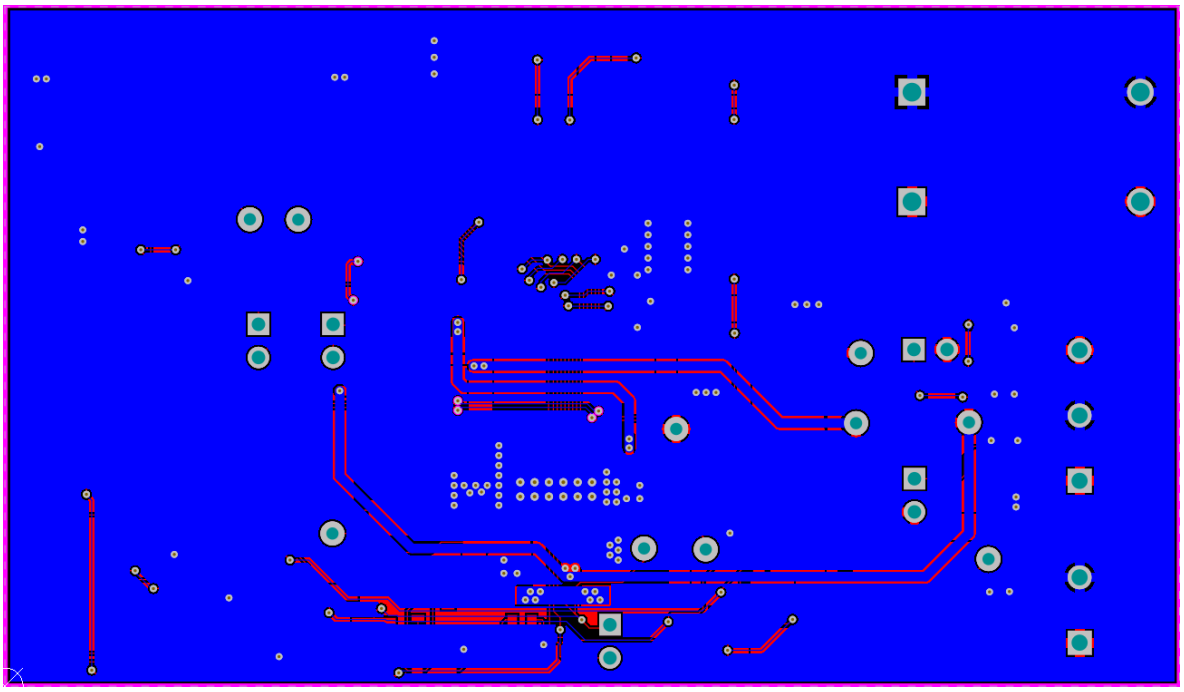

Figure 15: Bottom layer view of TLE9461-3ES / TLE9471-3ES

10 Additional Information

For testing the TLE9461-3ES / TLE9471-3ES Evaluation Board, the Infineon Toolbox needs to be downloaded. It can be found at: https://www.infineon.com/Toolbox

Inside *Infineon Toolbox*, go to “Manage tools” and search for “Config Wizard for SBC”. The *Config Wizard* is a powerful user interface that allows to control the SBC, including full register access.

The connection between computer and evaluation board is supported by the µIO stick. A short video tutorial how to setup the board can be found at www.infineon.com/sbc (Lite SBC family).

For further information please contact **http://www.infineon.com** or your regional FAE.

Edition 2016-07-06

Published by
Infineon Technologies AG
81726 Munich, Germany

© 2018 Infineon Technologies AG
All Rights Reserved.

LEGAL DISCLAIMER

THE INFORMATION GIVEN IN THIS APPLICATION NOTE IS GIVEN AS A HINT FOR THE IMPLEMENTATION OF THE INFINEON TECHNOLOGIES COMPONENT ONLY AND SHALL NOT BE REGARDED AS ANY DESCRIPTION OR WARRANTY OF A CERTAIN FUNCTIONALITY, CONDITION OR QUALITY OF THE INFINEON TECHNOLOGIES COMPONENT. THE RECIPIENT OF THIS APPLICATION NOTE MUST VERIFY ANY FUNCTION DESCRIBED HEREIN IN THE REAL APPLICATION. INFINEON TECHNOLOGIES HEREBY DISCLAIMS ANY AND ALL WARRANTIES AND LIABILITIES OF ANY KIND (INCLUDING WITHOUT LIMITATION WARRANTIES OF NON-INFRINGEMENT OF INTELLECTUAL PROPERTY RIGHTS OF ANY THIRD PARTY) WITH RESPECT TO ANY AND ALL INFORMATION GIVEN IN THIS APPLICATION NOTE.

Information

For further information on technology, delivery terms and conditions and prices, please contact the nearest Infineon Technologies Office (**www.infineon.com**).

Warnings

Due to technical requirements, components may contain dangerous substances. For information on the types in question, please contact the nearest Infineon Technologies Office.

Infineon Technologies components may be used in life-support devices or systems only with the express written approval of Infineon Technologies, if a failure of such components can reasonably be expected to cause the failure of that life-support device or system or to affect the safety or effectiveness of that device or system. Life support devices or systems are intended to be implanted in the human body or to support and/or maintain and sustain and/or protect human life. If they fail, it is reasonable to assume that the health of the user or other persons may be endangered.

w w w . i n f i n e o n . c o m

Published by Infineon Technologies AG

02_Top_Level.SchDoc

Power In

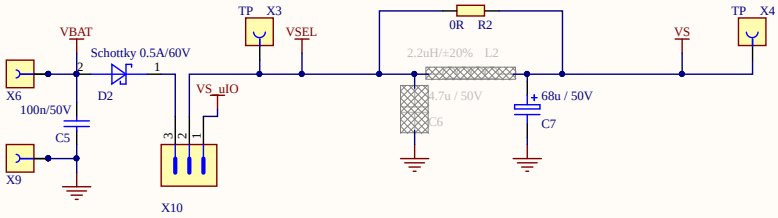

Chargepump / Reverse Polarity Protection

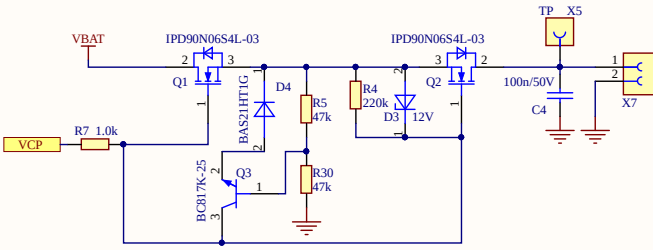

uIO Interface

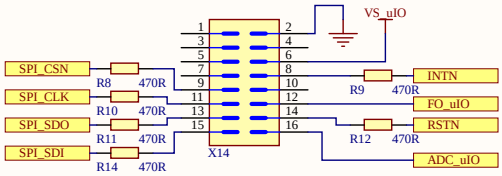

Debug Interface

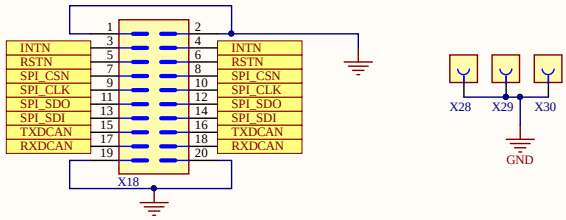

CAN

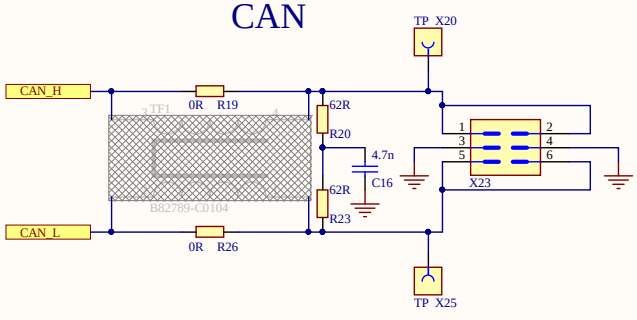

Fail Output

Mode

02_Top_Level.SchDoc

Power In

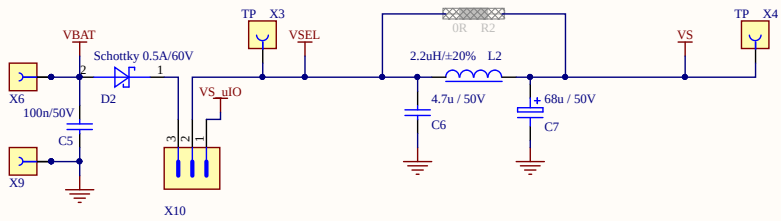

Chargepump / Reverse Polarity Protection

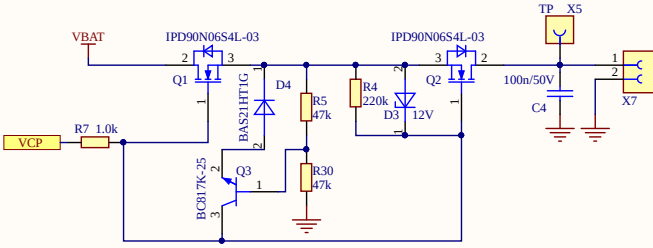

uIO Interface

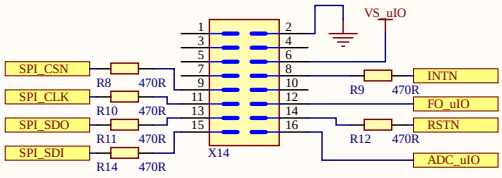

Debug Interface

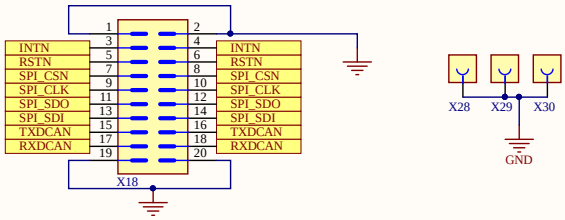

CAN

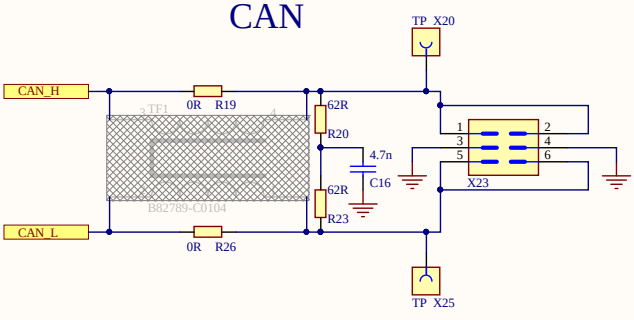

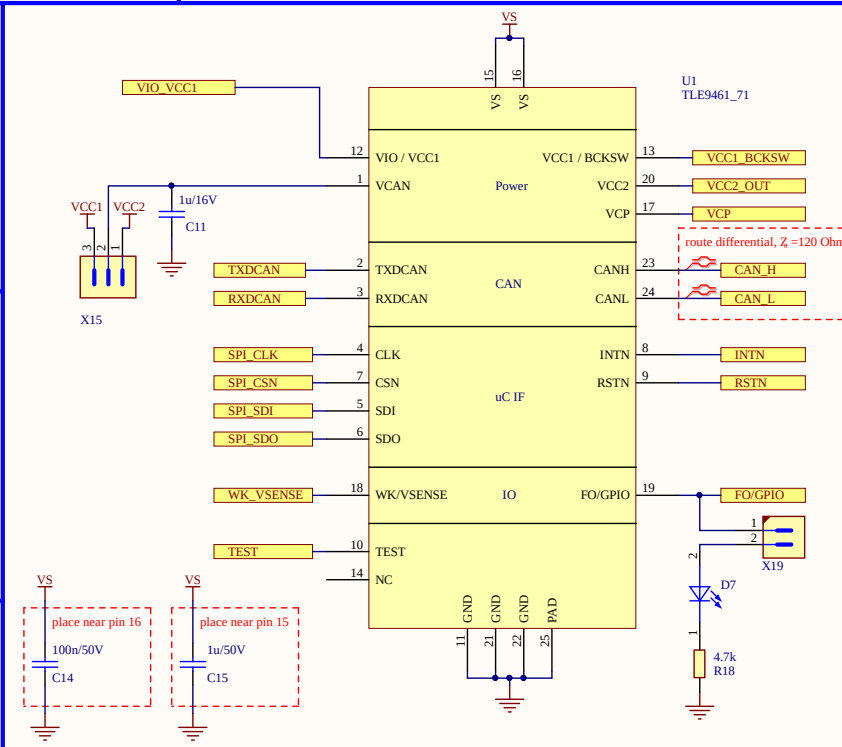

Fail Output

