Datasheet

mSATA 3TE7 series

- mSATA SATA III solution for industrial field
- High IOPS
- iSMART disk health monitoring
- iPower Guard for protecting unstable start up and shut down.
- iData Guard for abnormal power failure



Introduction

Innodisk mSATA 3TE7 is SATA III 6.0 Gb/s flash based disk, which adopts latest SATA III NAND controller with Innodisk's exclusive L^3 FW architecture. The upgraded L^3 FW architecture, combining Innodik signature 4K mapping algorithm L^2 FW architecture with powerful LDPC technology, makes 3TE7 series have outstanding high IOPS, better data integrity and extended lifespan through reducing the bad block number happening. Built-in thermal sensor and iData Guard ensure data integrity and reliability of mSATA 3TE7 for industrial applications.

mSATA SSD 3TE7 series

Diagram

For 32GB~512GB

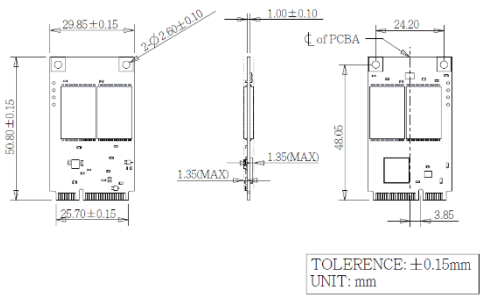

For 1TB~2TB

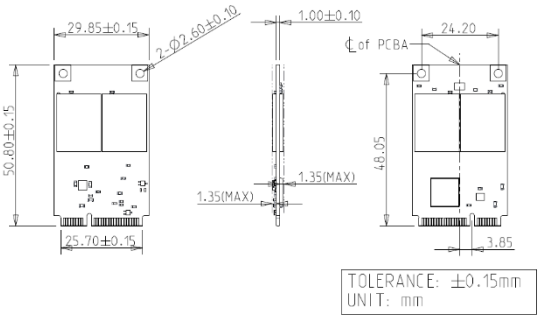

Contact us for more information about the mSATA 3TE7.

Innodisk is a service-driven provider of industrial embedded flash and DRAM storage products and technologies, with a focus on the industrial/embedded, aerospace and defense, and cloud computing industries.

Specifications

Interface	SATA III
Flash Type	3D TLC
Capacity	32GB~2TB
Max. Channels	4
Sequential R/W (MB/sec, max.)*	560 / 520 MB/s
4KB Random (QD32) R/W (IOPS)*	83,000/75,000
Max. Power Consumption	2W
Thermal Sensor	√
External DRAM Buffer	-
H/W Write Protect	Optional
ATA Security	√
S.M.A.R.T.	√
Dimension (WxLxH)	29.85 X 50.8 X 3.7 mm
Environment	Vibration: 20G @7~2000Hz Shock: 1500G @ 0.5ms Storage Temperature: -40°C ~ +85°C MTBF: 3 million hours
* Performance based on CystalDiskMark 6.0.2 with file size 1000MB	

Ordering Information (Please refer to TPS for detail)

Operation Temp.	32GB	64GB	128GB	256GB	512GB	1TB	2TB
Standard Grade (0°C ~ +70°C)	DEMSR-32GDK1EC1SL	DEMSR-64GDK1%C1SL	DEMSR-A28DK1%C1DL	DEMSR-B56DK1%C1QL	DEMSR-C12DK1%C*QL	DEMSR-01TDK1GCAQL	DEMSR-02TDK1GCAQQ
Wide-Temp. Grade (-20°C ~ +85°C)	NA	DEMSR-64GDK1GW1SL	DEMSR-A28DK1GW1DL	DEMSR-B56DK1GW1QL	DEMSR-C12DK1GW1QL	DEMSR-01TDK1GWAQL	DEMSR-02TDK1GWAQQ

%. E: 64 layers 3D TLC; G: 96 layers 3D TLC

*. PCB version control

Headquarters (Taiwan)

5F., No.237, Sec. 1, Datong Rd., Xizhi Dist., New Taipei City, Taiwan (R.O.C.)
Tel: +886-2-77033000
Email: sales@innodisk.com

Branch Offices:

USA
usasales@innodisk.com
+1-510-770-9421
Europe
eusales@innodisk.com
+31-40-3045-400
Japan
jpsales@innodisk.com
+81-3-6667-0161
China
sales_cn@innodisk.com
+86-755-21673689
www.innodisk.com

© 2018 Innodisk Corporation. All right reserved. Specifications are subject to change without prior notice.