Datasheet

2.5” SATA SSD

3SE3 series

- 2.5” SATA III solution for industrial field
- iSMART disk health monitoring
- Intelligent error recovery system
- Excellent data transfer speed
- Enhanced power cycling management



Introduction

Innodisk 2.5” SATA SSD 3SE3 is SATA III 6Gb/s Flash based disk, which delivers excellent performance and reliability making it the ideal solution for a variety of applications, including embedded system, industrial computing, and enterprise field. 3SE3 2.5” SSD not only performs unmatched performance, but also designed with Innodisk owned technical knowhow to ensure the data integrity and highest levels of reliability.

2.5” SATA SSD 3SE3 series

Contact us for more information about the 2.5” SATA SSD 3SE3

Innodisk is a service-driven provider of industrial embedded flash and DRAM storage products and technologies, with a focus on the industrial/embedded, aerospace and defense, and cloud computing industries.

Drawing

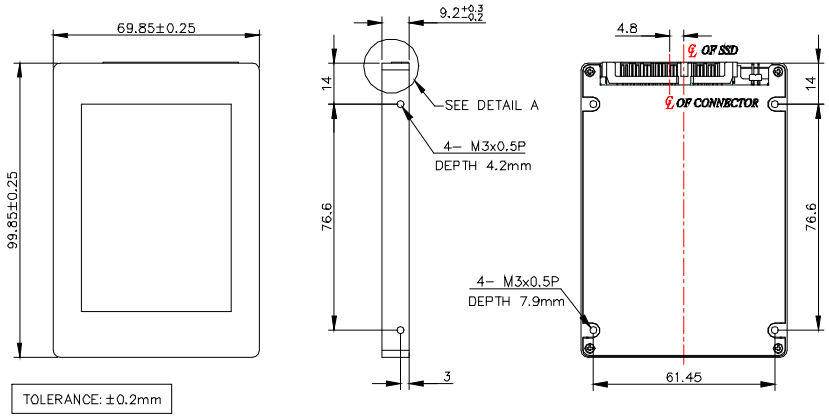

Specifications

Interface	SATA III
Flash Type	SLC
Capacity	8GB~128GB
Max. Channels	4
Sequential R/W (MB/sec, max.)	360 / 210
Max. Power Consumption	0.8W (5V x 160 mA)
Thermal Sensor	ST- Optional/ WT- Default
External DRAM Buffer	–
H/W Write Protect	–
Pin7 Power	–
ATA Security	√
S.M.A.R.T.	√
Dimension (WxLxH)	69.85 X 99.85 X 9.20 mm
Environment	Vibration: 20G @7~2000Hz Shock: 1500G @ 0.5ms Storage Temperature: -55°C ~ +95°C MTBF: 3 million hours

Headquarters (Taiwan)
5F., No.237, Sec. 1, Datong Rd.,
Xizhi Dist., New Taipei City,
Taiwan (R.O.C.)
Tel: +886-2-77033000
Email: sales@innodisk.com

Branch Offices:
USA
usasales@innodisk.com
+1-510-770-9421
Europe
eusales@innodisk.com
+31-040-282-1818
Japan
jpsales@innodisk.com
+81-3-6667-0161
China
sales_cn@innodisk.com
+86-755-21673689
www.innodisk.com

© 2016 Innodisk Corporation.
All right reserved. Specifications are subject to change without prior notice.

20160316

Ordering Information

Operation Temp.	8GB	16GB	32GB	64GB	128GB
Standard Grade (0°C ~ +70°C)	DES25-08GD08SCAQB	DES25-16GD08SCAQB	DES25-32GD08SCAQB	DES25-64GD08SCAQB	DES25-A28D08SCAQB
Industrial Grade (-40°C ~ +85°C)	DES25-08GD08SWAQB	DES25-16GD08SWAQB	DES25-32GD08SWAQB	DES25-64GD08SWAQB	DES25-A28D08SWAQB