Datasheet

SATA Slim
3MG2-P_AES series

- SATA III soultion for industrial field
- Hardware-based AES 256bits key
- iData Guard protection
- iSMART disk health monitoring
- Compliant with TCG OPAL 2.0
- Compliant with IEEE 1667
- Excellent data transfer speed
- Compatible with JEDEC MO-297 standard

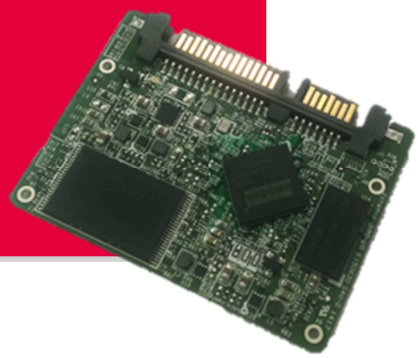

Introduction

Innodisk SATA Slim 3MG2-P is SATA III 6Gb/s Flash based disk, which designed with standard SATA interface (7+15 SATA connector), and compatible with JEDEC MO-297 standard. Innodisk SATA Slim 3MG2-P is designed with AES engine, which is built-in the controller. When controller receives the data package from host, AES engine encrypts the data package and saves the encrypted data into NAND flash. Thus, unauthorized personal has no access to decrypt the data in NAND flash. Innodisk SATA Slim 3MG2-P supports several standard features, including TRIM, NCQ, and S.M.A.R.T and compliant with TCG OPAL 2.0 and IEEE 1667.

SATA Slim 3MG2-P series

Drawing

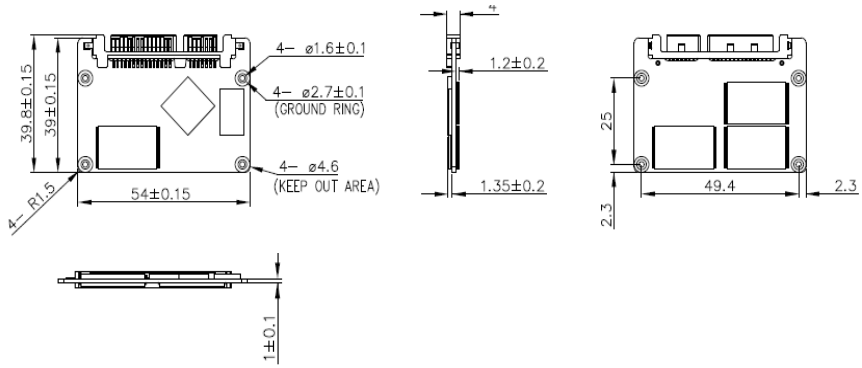

Contact us for more information about the SATA Slim 3MG2-P

Innodisk is a service-driven provider of industrial embedded flash and DRAM storage products and technologies, with a focus on the industrial/embedded, aerospace and defense, and cloud computing industries.

Interface	SATA III
Flash Type	MLC
Capacity	32GB~512GB
Max. Channels	4
Sequential R/W (MB/sec, max.)*	530/370 MB/s
4KB Random (QD32) R/W (IOPS)**	73,000/73,000
Max. Power Consumption	2.9W (5V x 590 mA)
Thermal Sensor	√
External DRAM Buffer	√
H/W Write Protect	Optional
Pin7 Power	–
ATA Security	√
S.M.A.R.T.	√
DEVSLP Mode	√ (min. power consumption 3mW)
Slumber Mode	√ (min. power consumption 30mW)
Dimension (WxLxH)	54.0 X 39.0 X 4.0 mm
Environment	Vibration: 20G @7~2000Hz Shock: 1500G @ 0.5ms Storage Temperature: -55°C ~ +95°C MTBF: 3 million hours

* Sequential performance based on CystalDiskMark 3.01 with file size 1000MB

* * Random performance based on IOmeter with Queue Depth 32

Headquarters (Taiwan)
5F., No.237, Sec. 1, Datong Rd., Xizhi Dist., New Taipei City 221, Taiwan (R.O.C.)

Tel: +886-2-77033000
Email: sales@innodisk.com

Branch Offices:
USA
usasales@innodisk.com
+1-510-770-9421
Europe
eusales@innodisk.com
+31-040-282-1818
Japan
jpsales@innodisk.com
+81-3-6667-0161
China
sales_cn@innodisk.com
+86-755-2167-3689
www.innodisk.com

© 2016 Innodisk Corporation. All right reserved. Specifications are subject to change without prior notice.

20160407

Ordering Information

Operation Temp.	32GB	64GB	128GB	256GB	512GB
Standard Grade (0°C ~+70°C)	DGSLM-32GD82BC1QC DGSLM-32GD82SCADN	DGSLM-64GD82BC1QC DGSLM-64GD82SCAQN	DGSLM-A28D82BC1QC DGSLM-A28D82SCAQN	DGSLM-B56D82BC1QC DGSLM-B56D82SCAQN	DGSLM-C12D82SCAQN
Industrial Grade (-40°C ~+85°C)	DGSLM-32GD82BW1QC DGSLM-32GD82SWADN	DGSLM-64GD82BW1QC DGSLM-64GD82SWAQN	DGSLM-A28D82BW1QC DGSLM-A28D82SWAQN	DGSLM-B56D82BW1QC DGSLM-B56D82SWAQN	DGSLM-C12D82SWAQN