INFRASOLID®

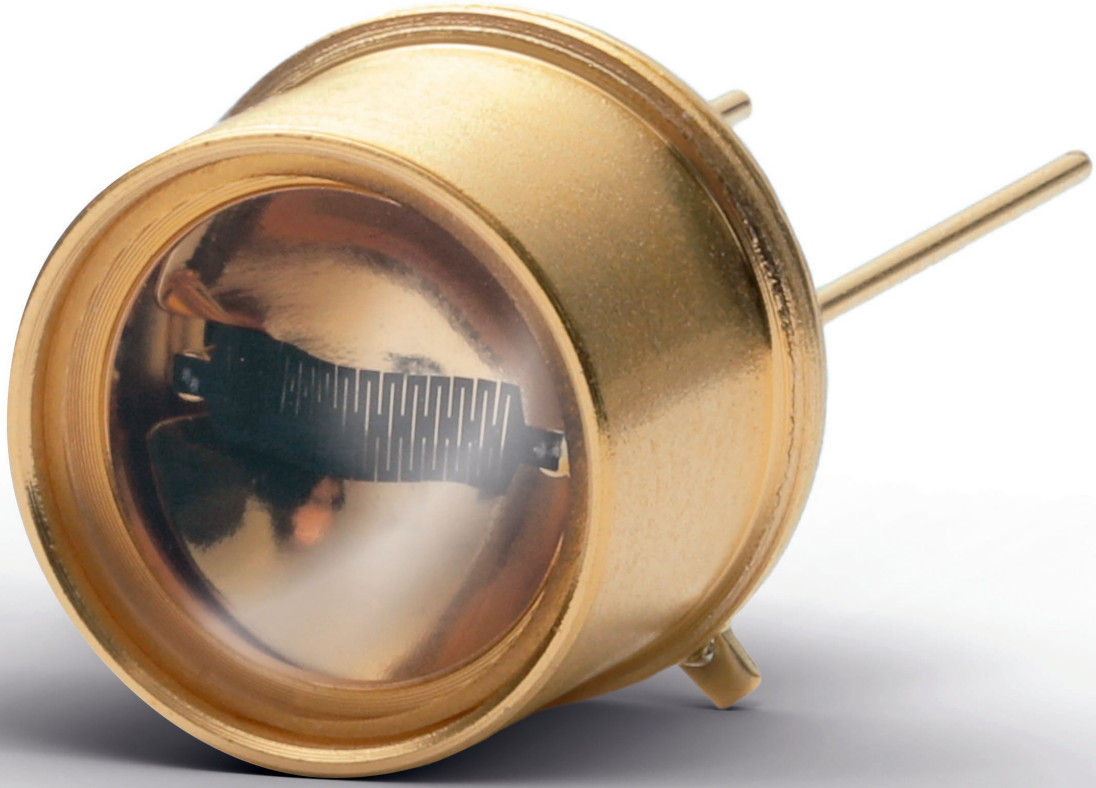

Data Sheet HIS*basic*

HIS550R-B

TO-39/TO-5 Thermal Infrared Emitter

HIS550R-B

Thermal infrared emitter with BaF_2 window and Nitrogen gas filling

Our HIS550R-B is a NiCr filament based thermal emitter in a TO-39 package, with a glued BaF_2 window. This guarantees hermetically sealed package and long-term stability. The cap with the glued BaF_2 window is tested with Helium leak test at $< 10^{-8}$ mbar l/s.

HIS*basic* series emitters have an integrated gold plated reflector that directs the radiation emitted from the rear to the front in order to achieve maximum efficiency. All our emitters offer minimum drift at a constant electrical resistance. Infrasolids IR emitters are characterized by a very low temperature coefficient of electrical resistance. Therefore the hot resistance and the cold resistance are almost identical which eases the electrical control of the IR sources.

Key features



High radiant power

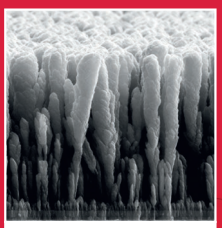

High efficiency



Hermetically sealed

- **Pulsable thermal black-body infrared source mounted in an industry standard TO-39/TO-5 package.**
- **Patented nanostructured radiating element generates black-body spectrum with up to 1000 % more detection signal compared to competitors.**
- **Glued, high-quality filter windows guarantee long-term stable operation.**
- **Wide wavelength range enables a broad range of applications.**

innovative infrared sources for gas detection & spectroscopy

Main specifications

Parameter	HIS550R-B
Package	TO-39 / TO-5
Radiating element area	11 mm^2
Radiating element emissivity	> 0.9
Radiating element temperature	600 °C at 650 mW
Optical output power	up to 220 mW
Max. electrical power (DC)	700 mW
Max. electrical voltage	4.0 V
Max. electrical current	175 mA
Electrical cold resistance	22 +/- 3 Ω (typ. 21...23 Ω)
Electrical hot resistance	22 +/- 3 Ω (typ. 21...23 Ω)
Modulation frequency*	6 Hz
Filter (glued window)	BaF_2
Wavelength range	2 to 14 µm
Filling gas	Nitrogen

* 50 % modulation depth, square wave signal, 50 % duty cycle

Optical specifications

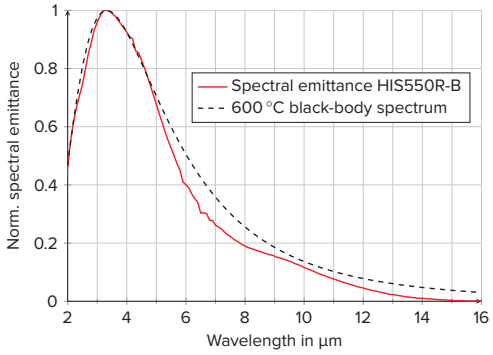

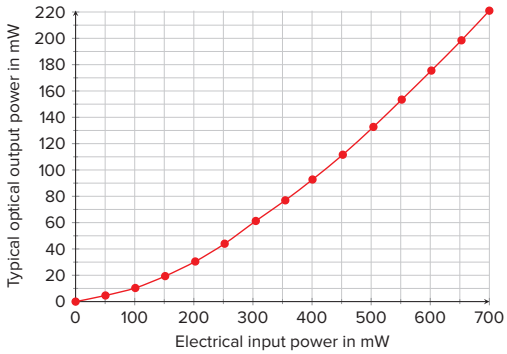

Radiating element temperature

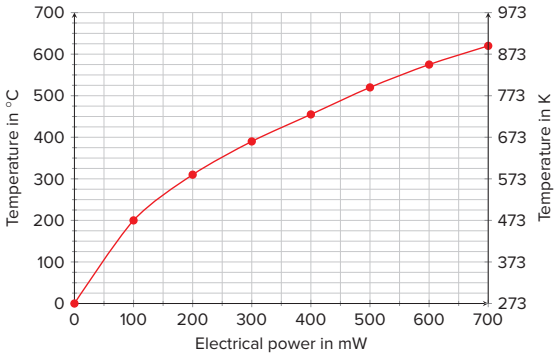

Modulation depth

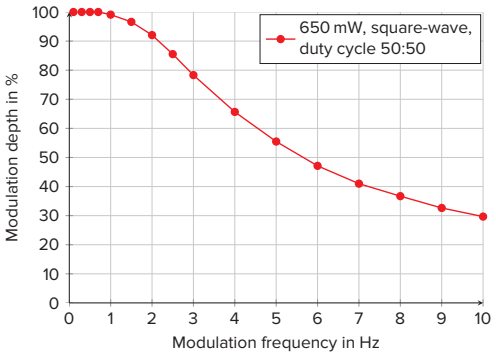

Electrical specifications

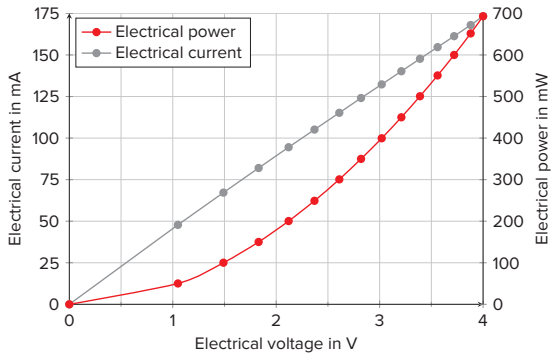

Window material transmissivity

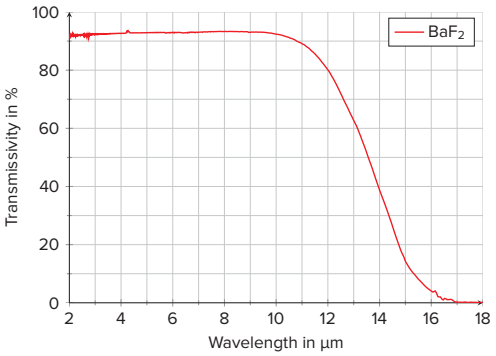

HIS550R-B

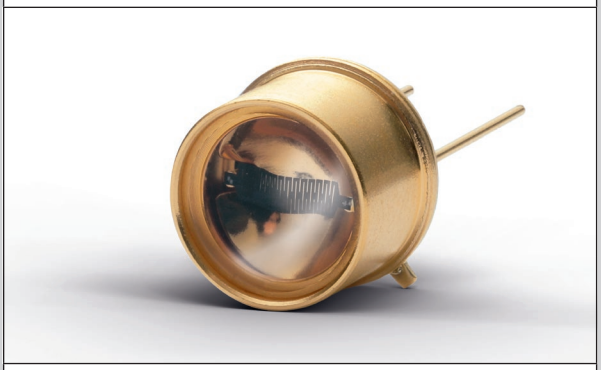

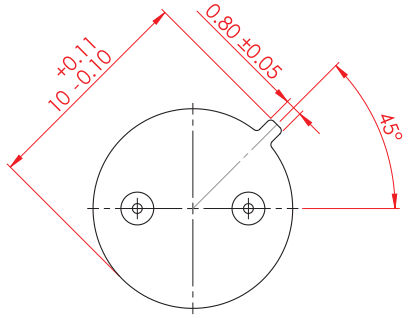

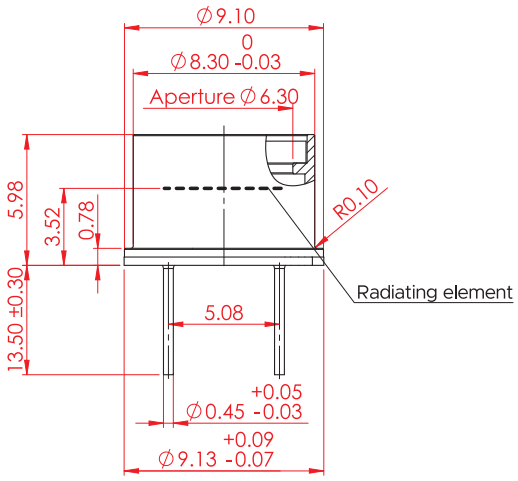

Maximum housing temperatures without heat sink (at T_{amb} = 20 °C):

HIS550R-B@700 mW	Driving mode	
	DC	1 Hz square wave
T_{max} side of can	80 °C	55 °C
T_{max} bottom of header	75 °C	55 °C

All our emitters comply with the following JEDEC-standards:

- **JESD22-A104**
  (temperature cycling and shock test: -45 °C / + 90 °C, 100 cycles)
- **JESD22-B103**
  (vibration test: log. sweep 20 Hz...2000 Hz, peak 20 g, X/Y/Z direction)
- **JESD22-B110**
  (drop test: 5000 m/s², 6 directions)

Angular radiation distribution

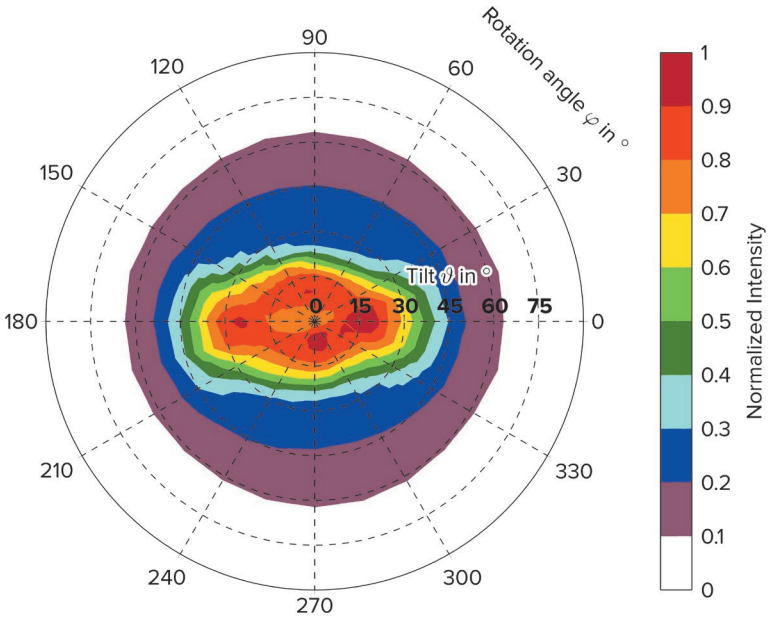

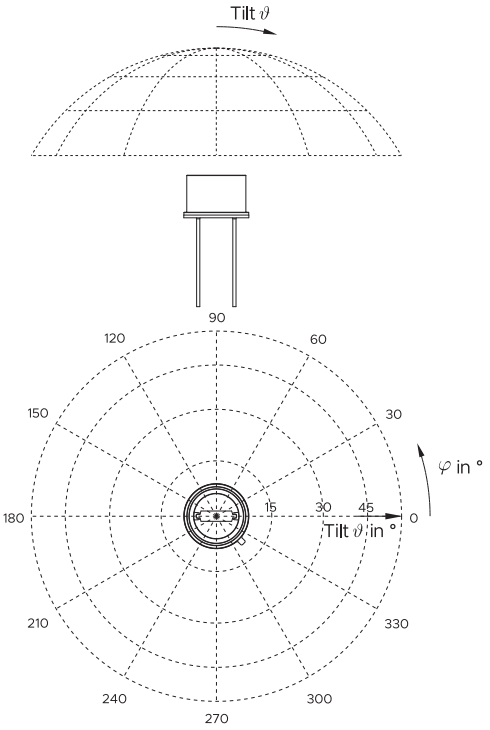

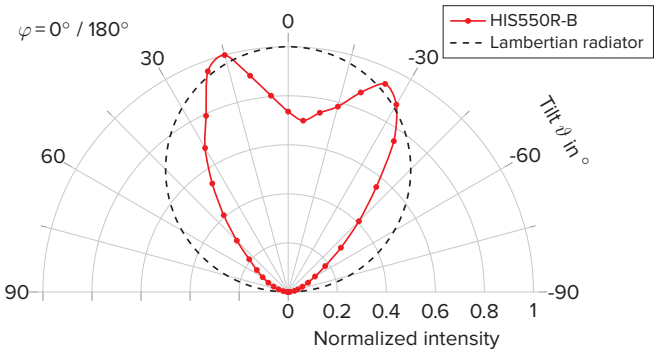

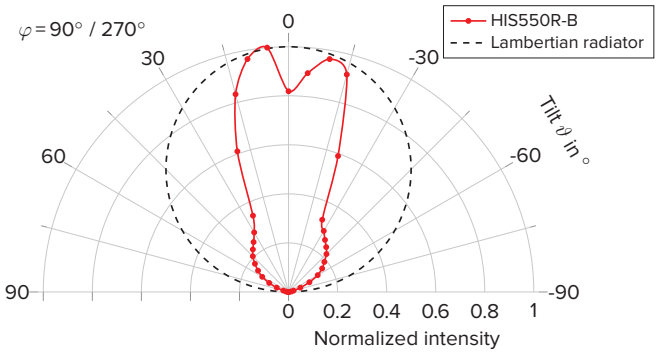

Driver Circuit Board (DCB):

We provide several Driver Circuit Boards (DCBs) for our HIS*smd*, HIS*basic* and HIS*power* series emitters to support a quick evaluation in your applications. All DCBs are small and use a low-cost driving circuit with a maximum stability close to a power regulated mode. Only a supply voltage and a pulse signal have to be applied. For more information about its function, see our technical notes.

The DCBs are available at:

www.infrasolid.com/accessories

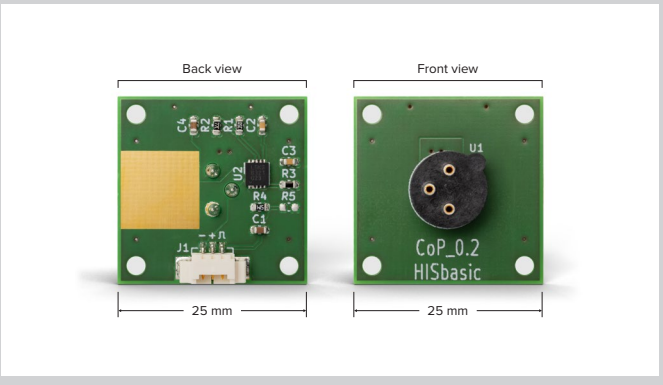

INFRASOLID®

Infrasolid GmbH · Gostritzer Str. 61 · 01217 Dresden · Germany
Phone: +49 (0) 351 / 8547 8031 · E-Mail: sales.infrasolid@ist-ag.com
www.infrasolid.com