1000BASE-T SINGLE & DUAL PORT TRANSFORMER MODULES

Ruggedized

iNRCORE FAMILY OF BRANDS

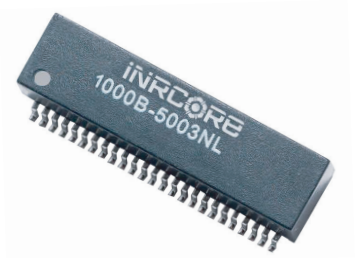

- Compliant with IEEE 802.3 standards
- 350µH OCL with 8mA DC bias at extended temperatures
- Dielectric Withstanding Voltage (DWV): 1500 Vrms
- Storage Temperature: -55°C to +125°C
- Operating Temperature:
  - 1000B-5001/5002/5003: -40°C to +85°C
  - 1000B-5001X/5002X/5003X: -55°C to +125°C
- Epoxy Encapsulated Package
- Lead Finish: Sn63/Pb37
- Moisture Sensitivity Level: 3

Electrical Specifications @ 25°C

Part Number	Insertion Loss (dB MAX)				Return Loss (dB MIN)				Crosstalk (dB MIN)			CM to CM Rejection (dB MIN)			DM to CM Rejection (dB MIN)		
	0.10 MHz	30 MHz	60 MHz	100 MHz	30 MHz	60 MHz	80 MHz	100 MHz	30 MHz	60 MHz	100 MHz	30 MHz	60 MHz	100 MHz	30 MHz	60 MHz	100 MHz
1000B-5001	1.2	1.2	1.2	1.2	18	12	10	8	43	37	33	40	35	30	43	37	30
1000B-5001X	1.4	1.4	1.4	1.4	18	12	10	8	43	37	33	40	35	30	43	37	33
1000B-5002	1.2	1.2	1.2	1.2	18	14	12	10	43	37	33	40	35	30	43	37	33
1000B-5002X	1.2	1.2	1.2	1.2	18	14	12	10	43	37	33	40	35	30	43	37	33
1000B-5003	1.2	1.2	1.2	1.2	18	14	11	9	43	37	33	40	35	30	43	37	33
1000B-5003X	1.2	1.2	1.2	1.2	18	14	11	9	43	37	33	40	35	30	43	37	33

NOTES:

1. Add suffix "NL" for RoHS compliant version; i.e. 1000B-5001 becomes **1000B-5001NL**. (For NL version of 5003/5003X, MSL = 4) NL parts have 100% SN Lead Finish.
2. For Tape & Reel packaging, add "T" suffix at the end of the part number: i.e. **1000B-5001NLT**

Mechanicals

1000B-5001/X

Dimensions: inch [mm]
Tolerance (unless otherwise specified): ±0.010 [0.25]

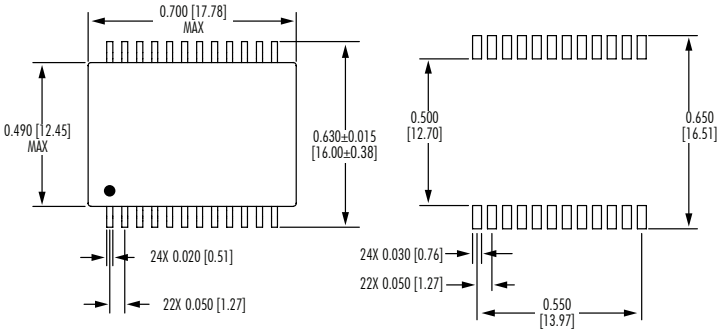

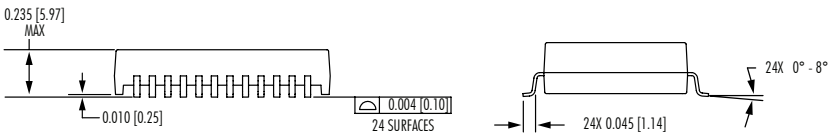

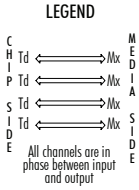

Electrical Schematics

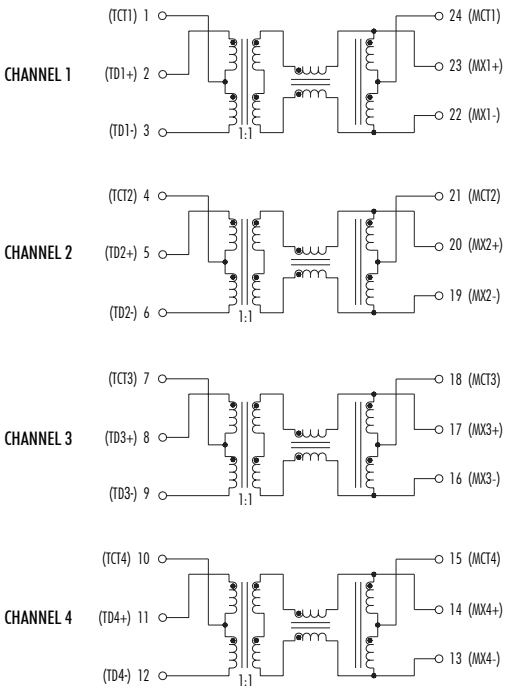

Performance warranty of products offered on this data sheet is limited to the parameters specified. Data is subject to change without notice. Other brand and product names mentioned herein may be trademarks or registered trademarks of their respective owners. © Copyright, 2023. iNRCORE, LLC. All rights reserved.

1000BASE-T SINGLE & DUAL PORT TRANSFORMER MODULES

Ruggedized

1000B-5002/X

Mechanicals

Dimensions: inch [mm]
Tolerance (unless otherwise specified): ±0.010 [0.25]

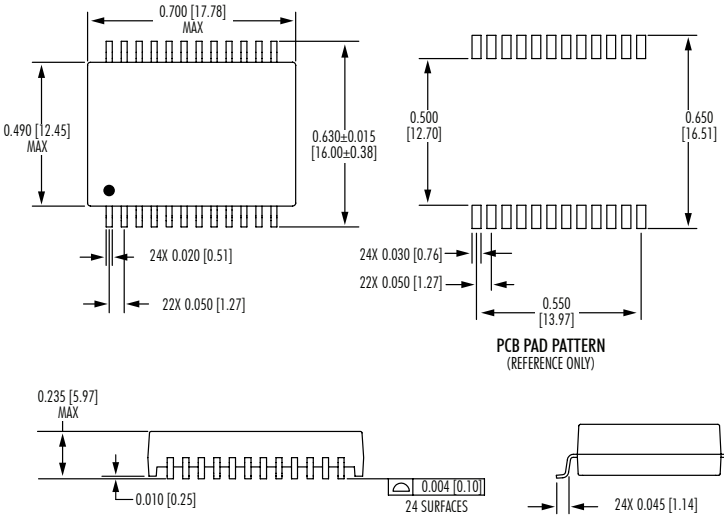

Electrical Schematics

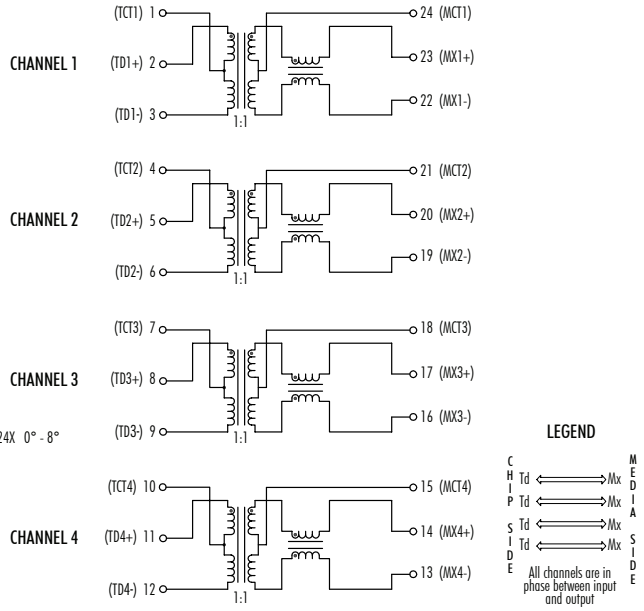

1000B-5003/X

Mechanicals

Dimensions: inch [mm]
Tolerance (unless otherwise specified): ±0.010 [0.25]

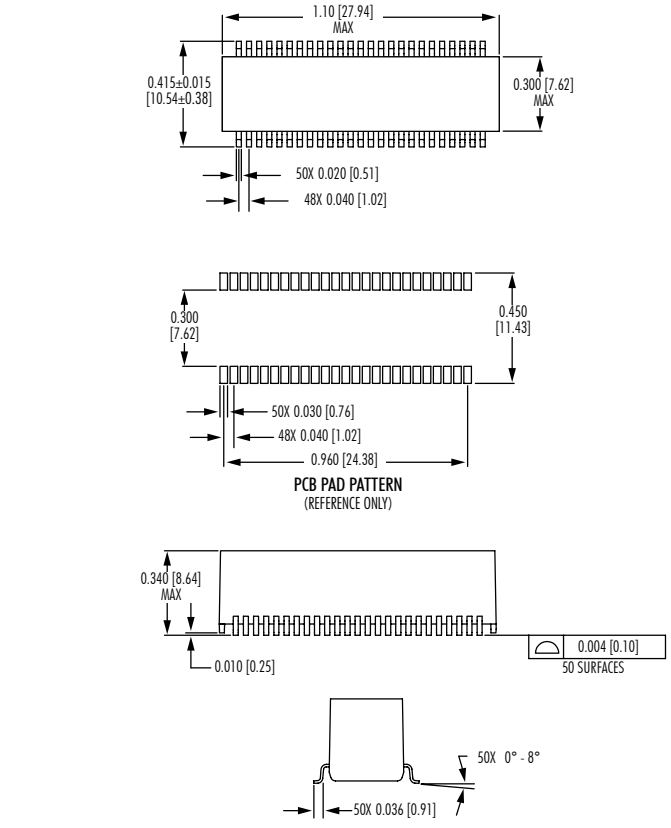

Electrical Schematics

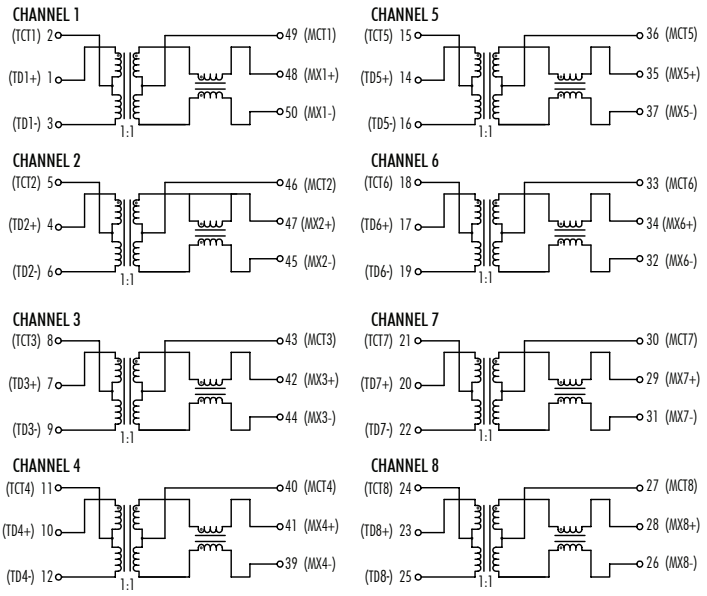

Performance warranty of products offered on this data sheet is limited to the parameters specified. Data is subject to change without notice. Other brand and product names mentioned herein may be trademarks or registered trademarks of their respective owners. © Copyright, 2023. iNRCORE, LLC. All rights reserved.

Recommended Reflow Profile (Based on J-STD-020D)

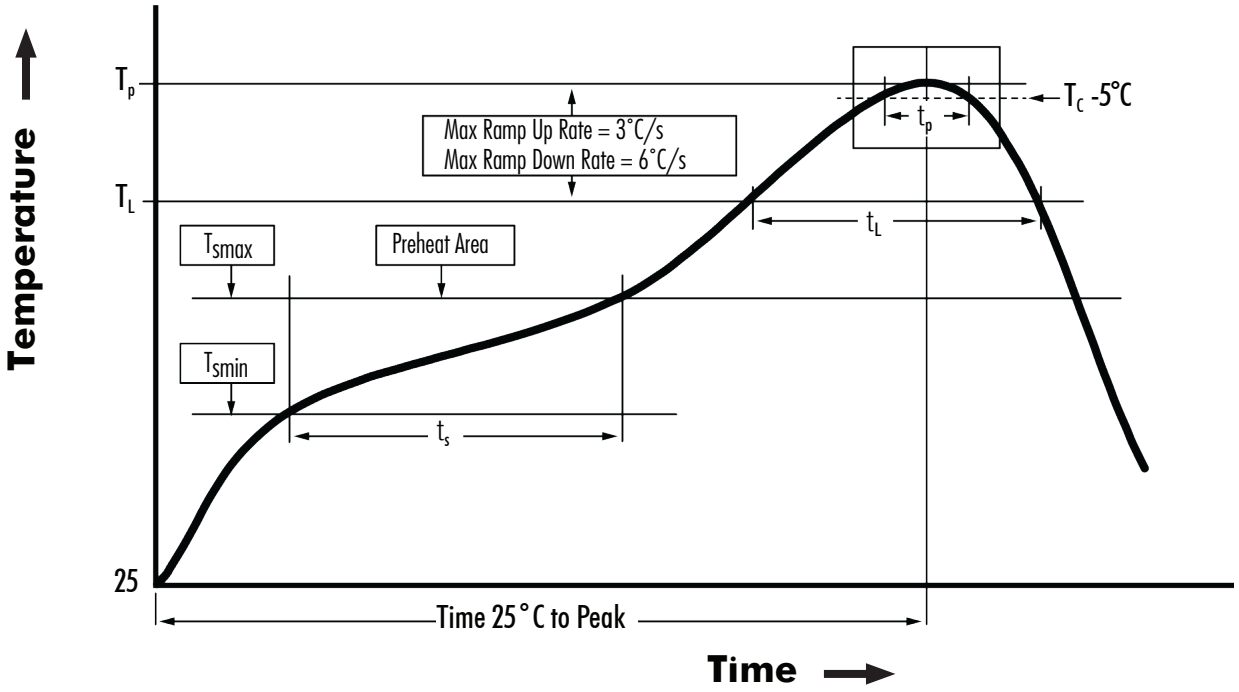

T_{SMIN} (°C)	T_{SMAX} (°C)	T_L (°C)	T_P (°C MAX)	t_S (s)	t_L (s)	t_P (s MAX)	Ramp-up rate (T_L to T_P)	Ramp-down rate (T_P to T_L)	Time 25°C to peak temperature (s MAX)
Tin/Lead Profile									
100	150	183	235	60 - 120	60 - 150	20	3°C/s MAX	6°C/s MAX	360
Non-Lead Profile									
150	200	217	245	60 - 120	60 - 150	30	3°C/s MAX	6°C/s MAX	480

NOTES:

1. All temperatures measured on the package leads.
2. Maximum number of reflow cycles not to exceed 2.
3. Reflow cycle applies only to surface mount parts.

iNRCORE, LLC
311 Sinclair Road, Bristol, PA 19007-6812 USA
Tel: +1.215.781.6400 Fax: +1.215.781.6430
www.iNRCORE.com

Performance warranty of products offered on this data sheet is limited to the parameters specified. Data is subject to change without notice. Other brand and product names mentioned herein may be trademarks or registered trademarks of their respective owners. © Copyright, 2023. iNRCORE, LLC. All rights reserved.