10/100/1000 BASE-T SINGLE & DUAL TRANSFORMER MODULE

Ruggedized

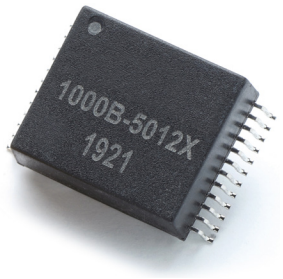

- Compliant with IEEE 802.ab for 1000Base-T
- 350µH OCL with 8mA bias at extended temperatures
- Two Operating & Storage Temperature versions available:
  - Standard: -40°C to +85°C
  - Extended: -55°C to +125°C
- Peak Reflow Temperature: 245°C (for RoHS versions)
- Moisture Sensitivity Level: 3

Electrical Specifications @ 25°C

Part Number	Insertion Loss (dB MAX)				Return Loss (dB MIN)				Crosstalk (dB MIN)			CM to CM Rejection (dB MIN)			DM to CM Rejection (dB MIN)			HiPot (Vrms)
	0.10 MHz	30 MHz	60 MHz	100 MHz	30 MHz	60 MHz	80 MHz	100 MHz	30 MHz	60 MHz	100 MHz	30 MHz	60 MHz	100 MHz	30 MHz	60 MHz	100 MHz	
1000B-5009F	1.4	1.4	1.4	1.4	18	12	10	8	43	37	31	30	25	18	40	35	30	1500
1000B-5009FX	1.4	1.4	1.4	1.4	18	12	10	8	43	37	31	30	25	18	40	35	30	1500
1000B-5012F	1.2	1.2	1.2	1.2	18	12	10	8	43	37	33	40	35	30	43	37	30	1500
1000B-5012FX	1.2	1.2	1.2	1.2	18	12	10	8	43	37	33	40	35	30	43	37	30	1500
1000B-5014F	1.4	1.4	1.4	1.4	16	12	10	8	43	37	33	33	30	28	43	37	30	1500
1000B-5014FX	1.4	1.4	1.4	1.4	16	12	10	8	43	37	33	33	30	28	43	37	30	1500
1000B-5016F	1.2	1.2	1.2	1.2	18	12	12	10	43	37	31	30	23	17	40	35	30	1500

NOTES:

1. Add suffix "**X**" for extended temperature version; i.e. 1000B-5009F becomes **1000B-5009FX**. (*1000B-5016F does not offer an extended temperature version)
2. Add suffix "**NL**" for RoHS compliant version; i.e. 1000B-1012F becomes **1000B-1012FNL**. NL parts have 100% SN Lead Finish (MSL:4).
3. For Tape & Reel packaging, add "**T**" suffix at the end of the part number: i.e. **1000B-5014FT**.

Mechanicals

1000B-5009F/X

Dimensions: inch [mm]
Tolerance (unless otherwise specified): ±0.010 [0.25]

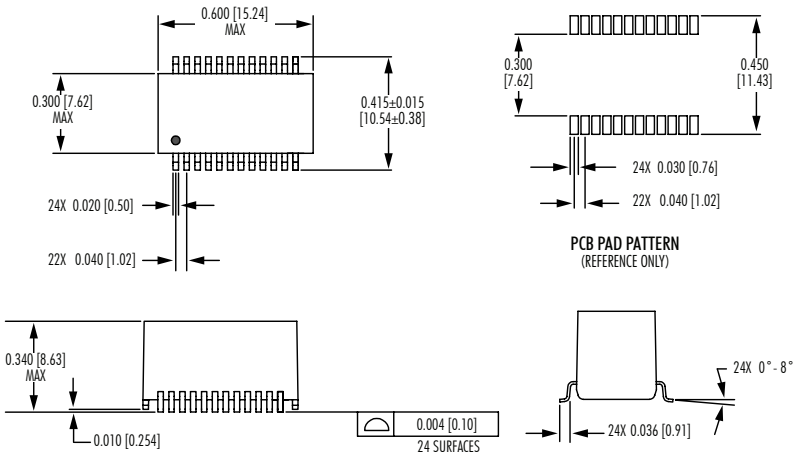

Electrical Schematics

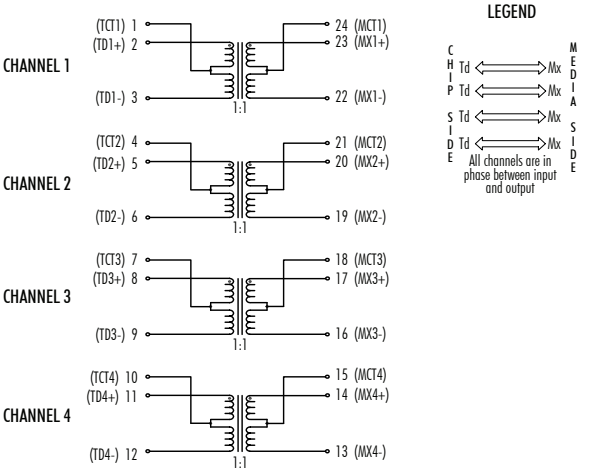

Performance warranty of products offered on this data sheet is limited to the parameters specified. Data is subject to change without notice. Other brand and product names mentioned herein may be trademarks or registered trademarks of their respective owners. © Copyright, 2020. iNRCORE, LLC. All rights reserved.

10/100/1000 BASE-T SINGLE & DUAL TRANSFORMER MODULE

Ruggedized

Mechanicals

1000B-5012F/X

Dimensions: inch [mm]
Tolerance (unless otherwise specified): ±0.010 [0.25]

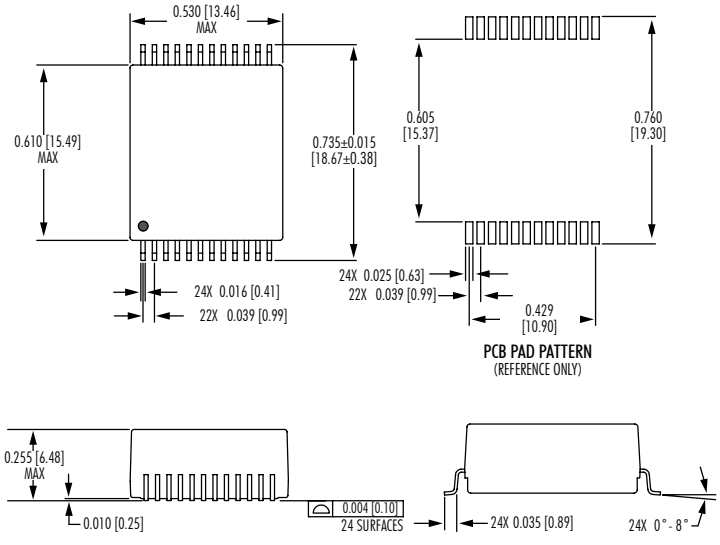

Electrical Schematics

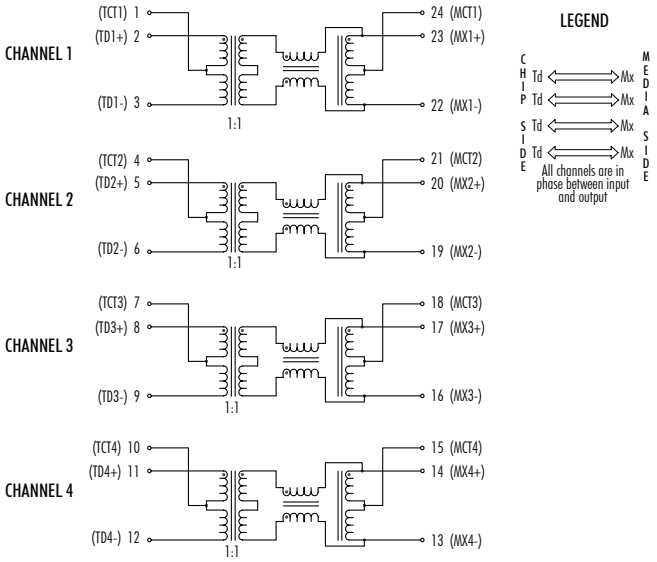

Mechanicals

1000B-5014F/X

Dimensions: inch [mm]
Tolerance (unless otherwise specified): ±0.010 [0.25]

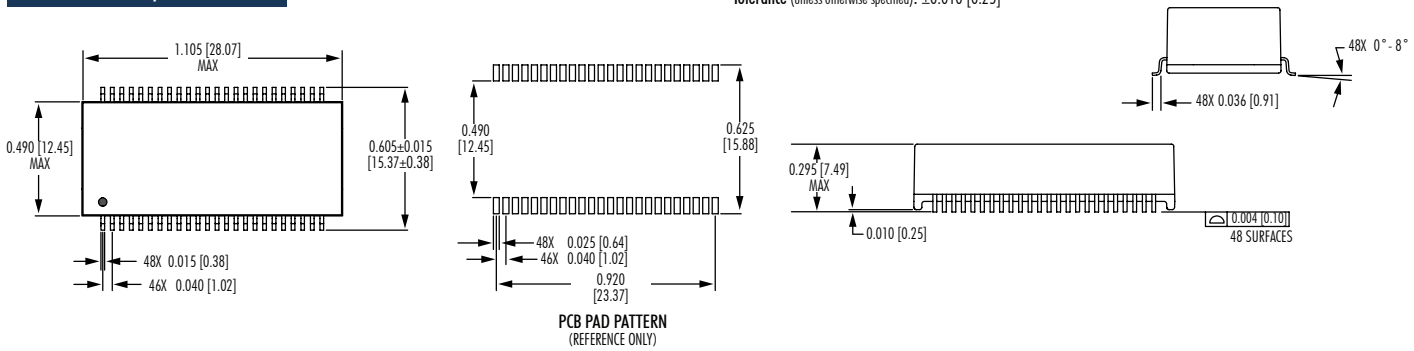

Electrical Schematics

1000B-5014F/X

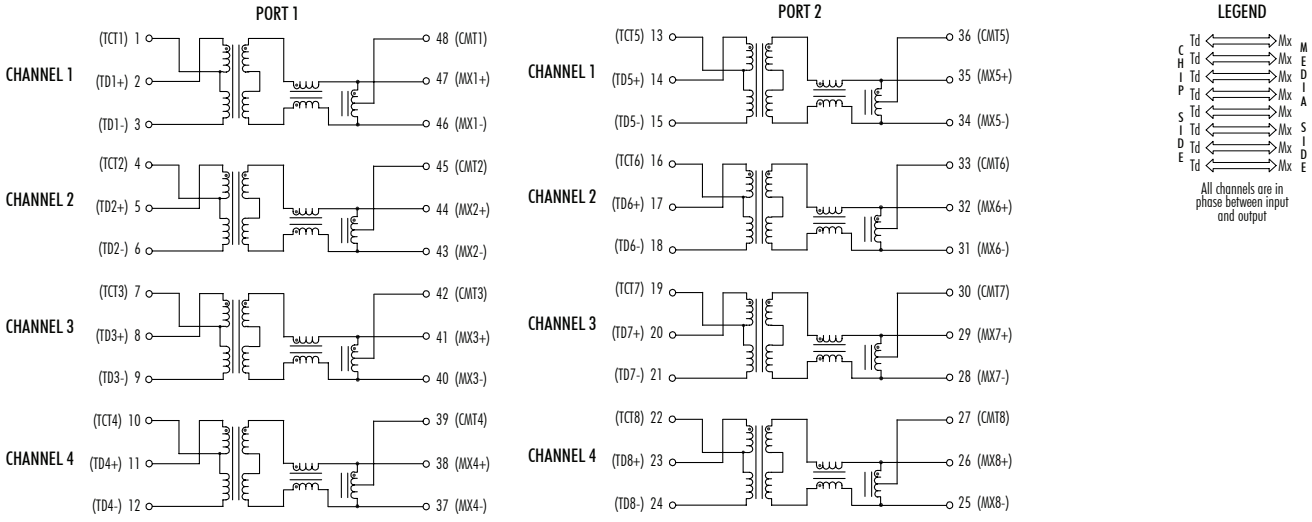

iNRCORE, LLC
311 Sinclair Road, Bristol, PA 19007-6812 USA
Tel: +1.215.781.6400 Fax: +1.215.781.6430
www.iNRCORE.com

Performance warranty of products offered on this data sheet is limited to the parameters specified. Data is subject to change without notice. Other brand and product names mentioned herein may be trademarks or registered trademarks of their respective owners. © Copyright, 2020. iNRCORE, LLC. All rights reserved.

10/100/1000 BASE-T SINGLE & DUAL TRANSFORMER MODULE

Ruggedized

Mechanicals

1000B-5016F

Dimensions: inch [mm]
Tolerance (unless otherwise specified): ±0.010 [0.25]

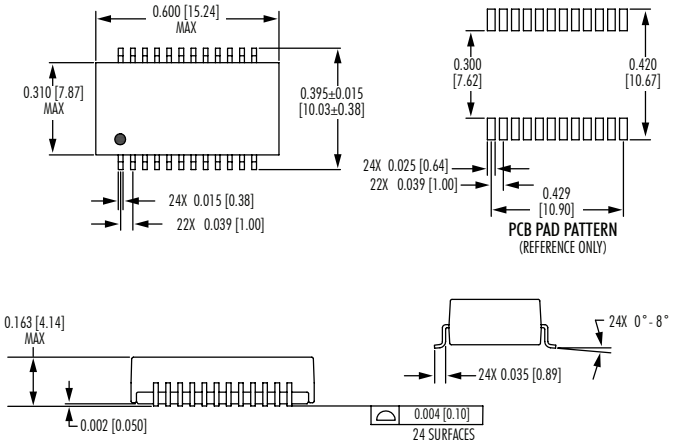

Electrical Schematics

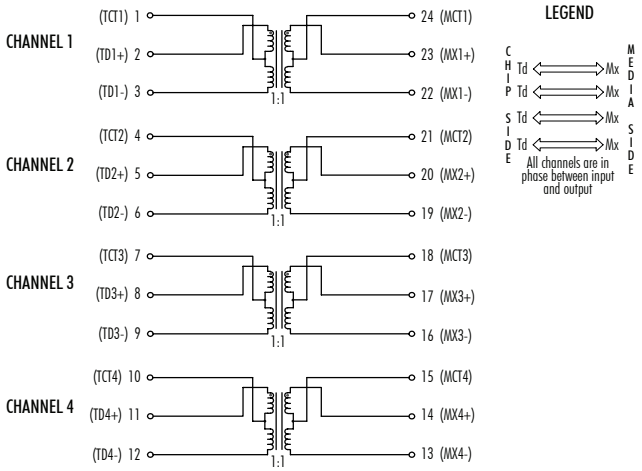

Tin/Lead Recommended Reflow Profile (Based on J-STD-020D)

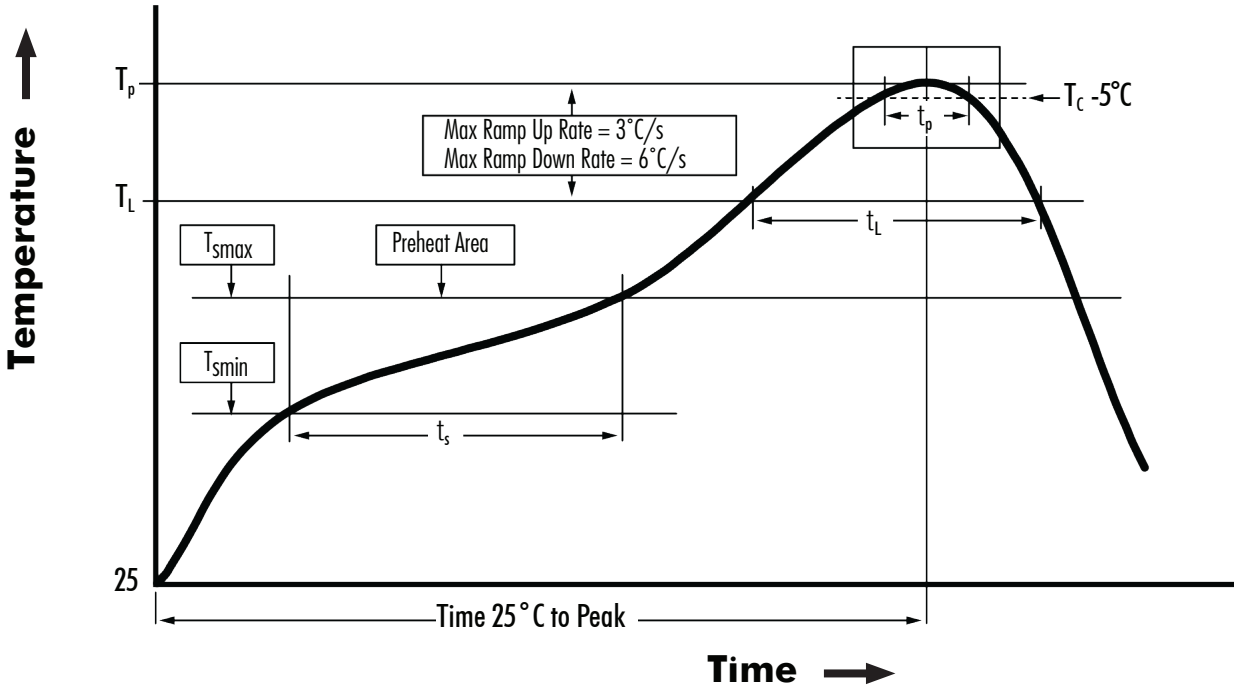

T_{SMIN} (°C)	T_{SMAX} (°C)	T_L (°C)	T_P (°C MAX)	t_S (s)	t_L (s)	t_P (s MAX)	Ramp-up rate (T_L to T_P)	Ramp-down rate (T_P to T_L)	Time 25°C to peak temperature (s MAX)
100	150	183	235	60 - 120	60 - 150	20	3°C/s MAX	6°C/s MAX	360

NOTES:

1. All temperatures measured on the package leads.
2. Maximum times of reflow cycle: 2

iNRCORE, LLC
311 Sinclair Road, Bristol, PA 19007-6812 USA
Tel: +1.215.781.6400 Fax: +1.215.781.6430
www.iNRCORE.com

Performance warranty of products offered on this data sheet is limited to the parameters specified. Data is subject to change without notice. Other brand and product names mentioned herein may be trademarks or registered trademarks of their respective owners. © Copyright, 2020. iNRCORE, LLC. All rights reserved.