10/100/1000BASE–T SINGLE & DUAL PORT TRANSFORMER MODULES

Ruggedized

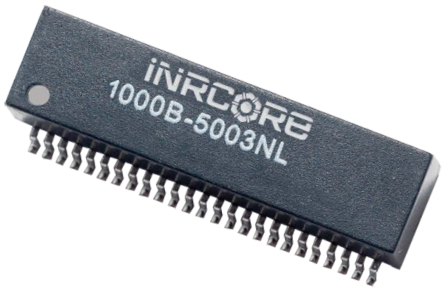

- Compliant with IEEE 802.3ab for 1000Base-T
- 350µH OCL with 8mA bias at extended temperatures
- Storage temperature: -55°C to +125°C
- Operating temperature:
  - 1000B-5001/5002/5003: -40°C to +85°C
  - 1000B-5001X/5002X/5003X: -55°C to +125°C
- IC grade transfer-molded package withstands 235°C peak temperature profile
- Moisture Sensitivity Level: 3

Electrical Specifications @ 25°C

Part Number[2]	Insertion Loss (dB Min)	Return Loss (dB Max)				Crosstalk (dB Max)			CM to CM Rejection Ratio (dB Max)			DM to CM Rejection Ratio (dB Max)			HiPot (Vrms MIN)
	0.1-100 Mhz	30 Mhz	60 Mhz	80 Mhz	100 Mhz	30 Mhz	60 Mhz	100 Mhz	30 Mhz	60 Mhz	100 Mhz	30 Mhz	60 Mhz	100 Mhz	@60HZ (1MIN)
1000B-5001	-1.20	-18	-12	-10	-10	-43	-37	-33	-40	-35	-30	-43	-37	-33	1500
1000B-5001F	-1.20	-18	-12	-10	-10	-43	-37	-33	-40	-35	-30	-43	-37	-33	1500
1000B-5001FX	-1.40	-18	-12	-10	-8	-43	-37	-33	-40	-35	-30	-43	-37	-33	1500
1000B-5002	-1.20	-18	-14	-12	-10	-43	-37	-33	-40	-35	-30	-43	-37	-33	1500
1000B-5002F	-1.20	-18	-14	-12	-10	-43	-37	-33	-40	-35	-30	-43	-37	-33	1500
1000B-5002FX	-1.20	-18	-14	-12	-10	-43	-37	-33	-40	-35	-30	-43	-37	-33	1500
1000B-5003	-1.20	-18	-14	-11	-9	-43	-37	-33	-40	-35	-30	-43	-37	-33	1500
1000B-5003F	-1.20	-18	-14	-11	-9	-43	-37	-33	-40	-35	-30	-43	-37	-33	1500
1000B-5003FX	-1.20	-18	-14	-11	-9	-43	-37	-33	-40	-35	-30	-43	-37	-33	1500

Note: 1. Add suffix NL for RoHS compliant part; i.e. 1000B-5001F becomes **1000B-5001FNL.**
2. For Tape and Reel Packaging, add "T" suffix at the end of the part number; i.e. **1000B-5001FXT.**
3. Add suffix X for extended temperature version (i.e. 1000B-5009F) becomes **1000B-5001FX.**

Mechanical

1000B-5001/F/X

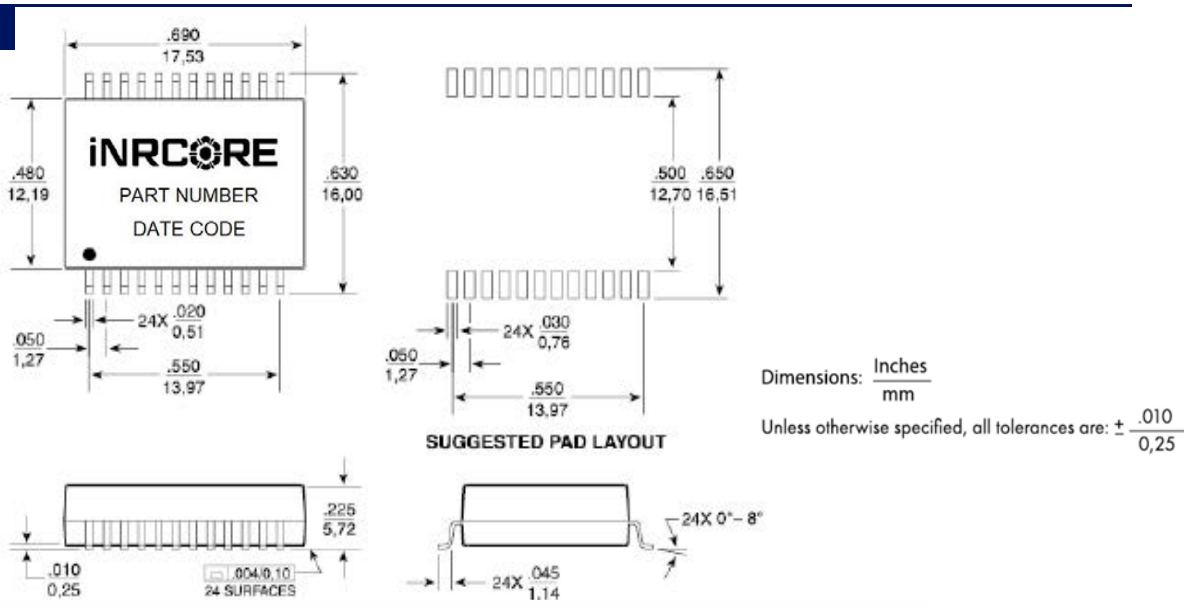

Mechanical

1000B-5002/F/X

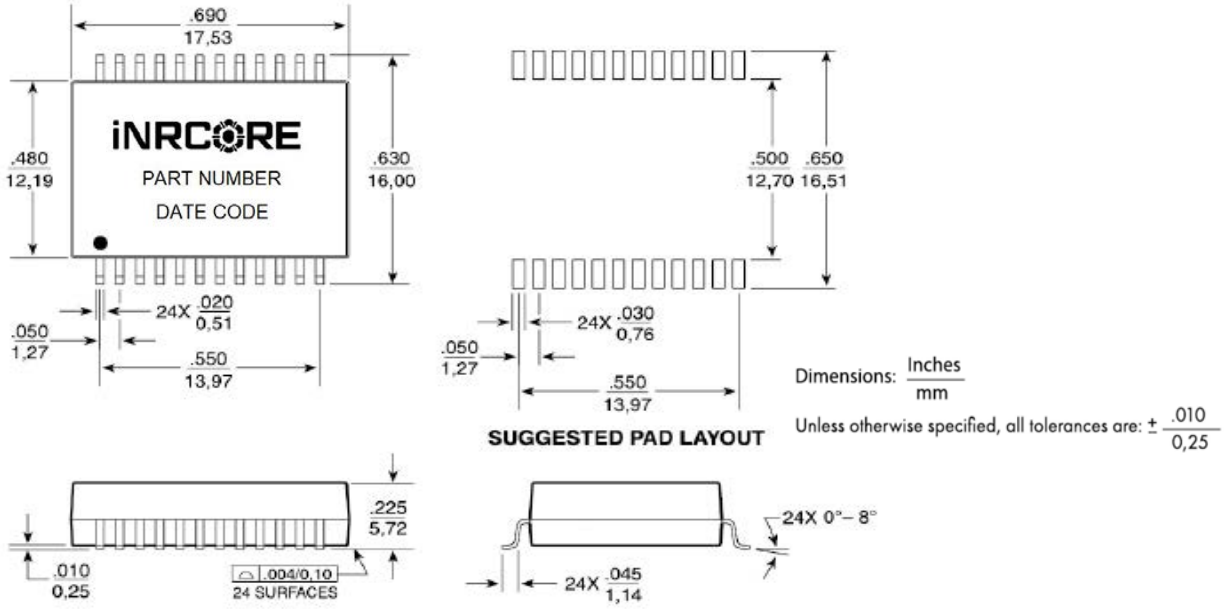

Mechanical

1000B-5003/F/X

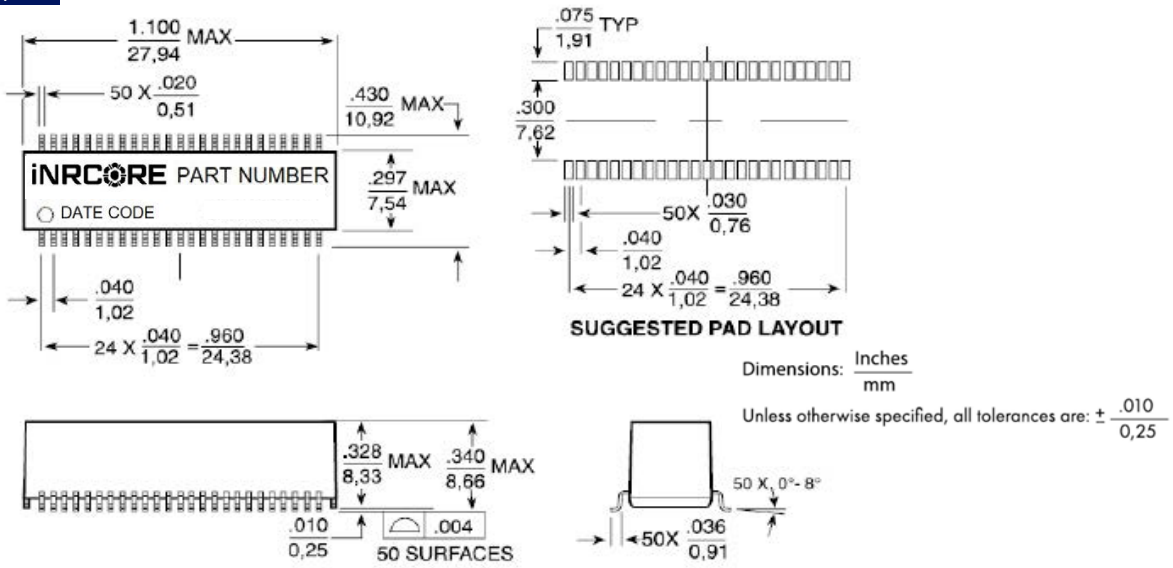

Electrical Schematics

1000B-5001/F/X

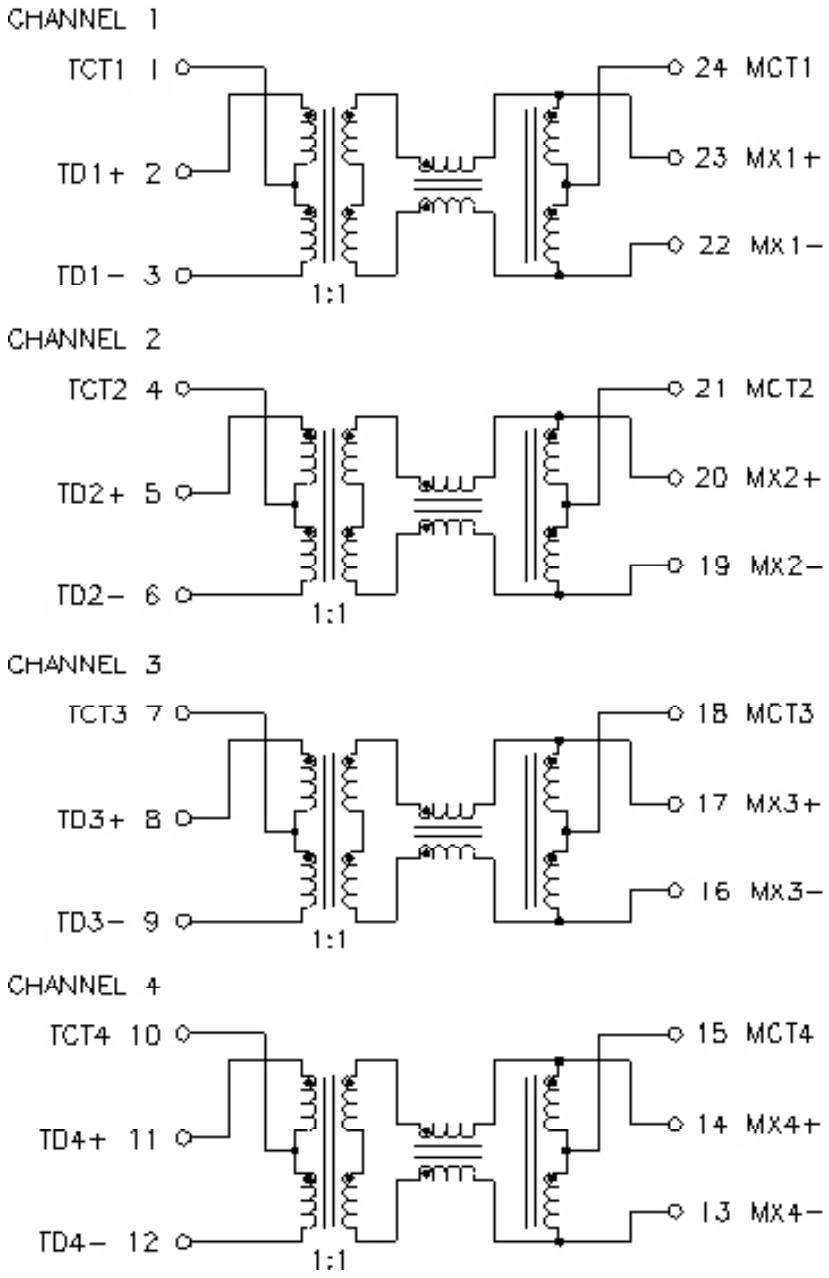

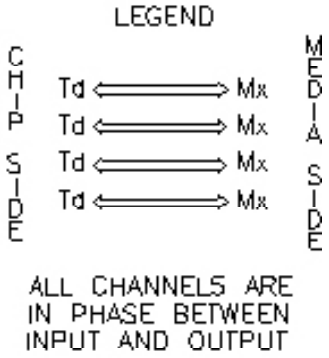

Electrical Schematics

1000B-5002/F/X

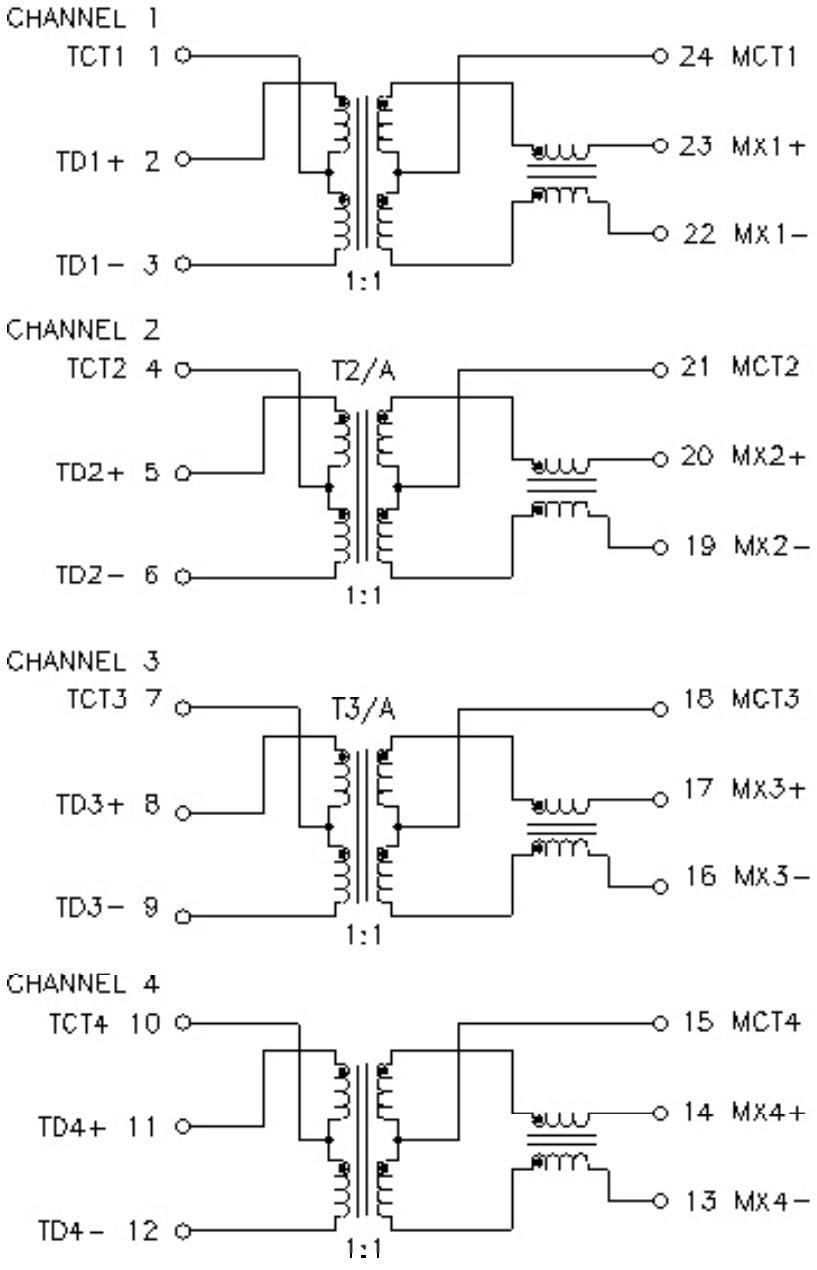

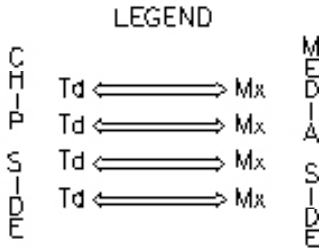

ALL CHANNELS ARE IN PHASE BETWEEN INPUT AND OUTPUT

Electrical Schematics

1000B-5003/F/X

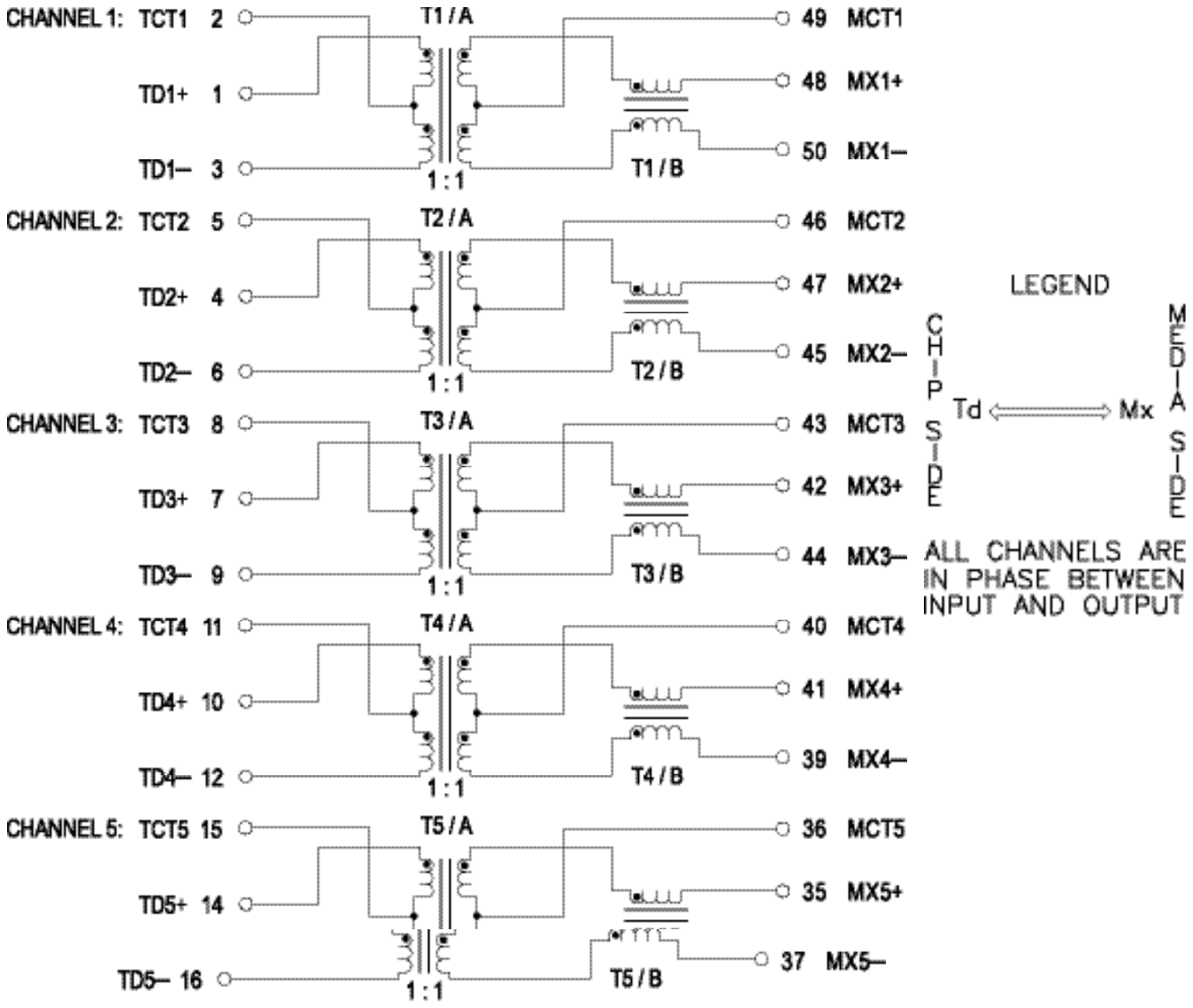

Continued on next page.

Electrical Schematics

1000B-5003/F/X(cont.)

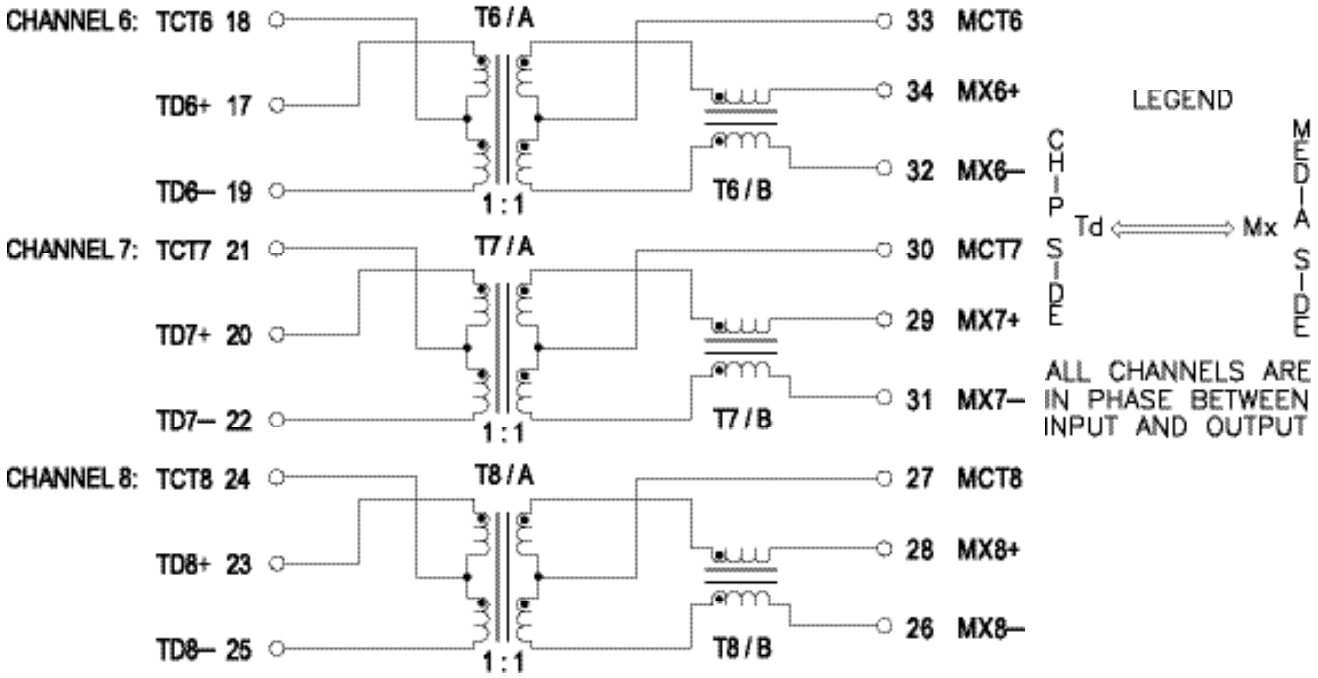

Tin/Lead Recommended Reflow Profile (Based on J-STD-020D)

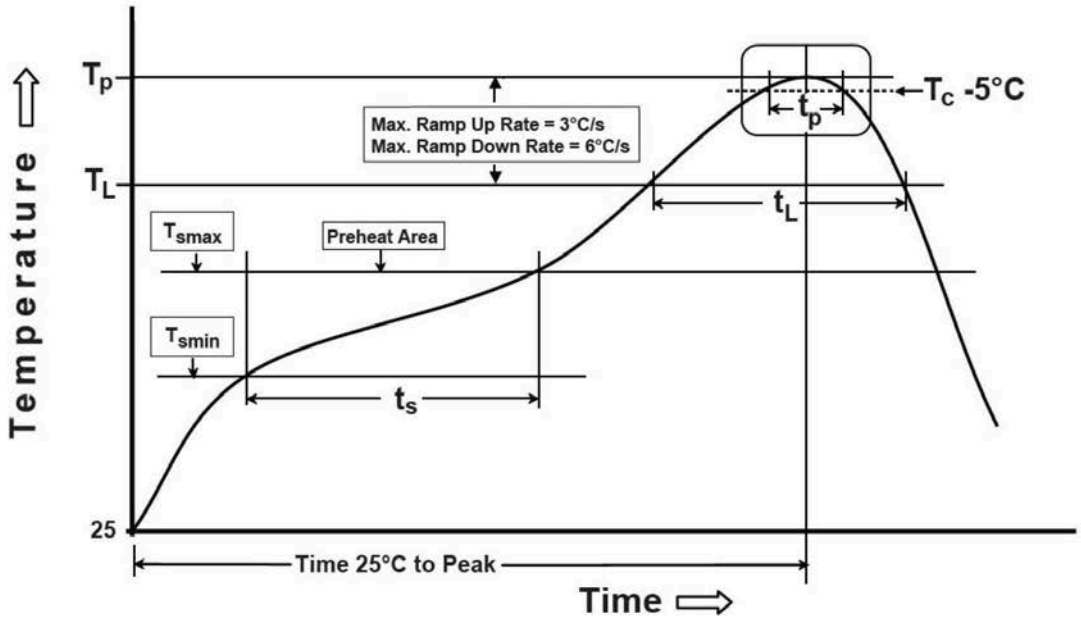

T_{SMIN} (°C)	T_{SMAX} (°C)	T_L (°C)	T_P (°C MAX)	t_S (s)	t_L (s)	t_P (s MAX)	Ramp-up rate (T_L to T_P)	Ramp-down rate (T_P to T_L)	Time 25°C to peak temperature (s MAX)
100	150	183	235	60-120	60-150	20	3°C/s MAX	6°C/s MAX	360

Notes:

1. All temperatures measured on the package leads.
2. Maximum times of reflow cycle: 2.

For More Information

iNRCORE,LLC
311 Sinclair Road Bristol,
PA 19007-6812 U.S.A
Tel: + 1.215.781.6400
Fax: +1.215.7816430

Global Sales Representatives and Locations:
http://www.inrcore.com

Performance warranty of products offered on this data sheet is limited to the parameters specified. Data is subject to change without notice. Other brand and product names mentioned herein may be trademarks or registered trademarks of their respective owners. © Copyright, 2020. iNRCORE, LLC. All rights reserved.