10/100BASE - TX DUAL PORT TRANSFORMER MODULE

Ruggedized



- Compliant with IEEE 802.3u & ANSI X3.263 standards
- 350µH OCL with 8mA bias
- Operating and Storage Temperature:
  - 100B-2002: -40°C to +85°C
  - 100B-2002X: -55°C to +125°C
- IC grade transfer-molded package withstands 235°C peak temperature profile

Electrical Specifications @ 25°C

Part Number	Insertion Loss (dB MAX)				Return Loss (dB MIN)						Crosstalk (dB MIN)				DM to CM Rejection Ratio (dB MIN)			
	0.10 MHz	30 MHz	60 MHz	100 MHz	2 MHz	30 MHz	40 MHz	50 MHz	60 MHz	80 MHz	1 MHz	30 MHz	60 MHz	100 MHz	1 MHz	60 MHz	100 MHz	200 MHz
100B-2002	1.2	1.2	1.2	1.2	18	18	16	15	12	12	50	43	37	33	43	37	33	22
100B-2002X	1.2	1.2	1.2	1.2	18	18	16	15	12	12	50	43	37	33	43	37	33	22

NOTES:

1. Standard Parts have Sn63/Pb37 Lead Finish (MSL:3)
2. Add suffix "NL" for RoHS compliant version; i.e. 100B-1001 becomes **100B-2002NL**. NL parts have 100% SN Lead Finish (MSL:4)
3. For Tape & Reel packaging, add "T" suffix at the end of the part number: i.e. **100B-2002XNLT**

Mechanicals

100B-2002 / 100B-2002X

Dimensions: inch [mm]
Tolerance (unless otherwise specified): ±0.010 [0.25]

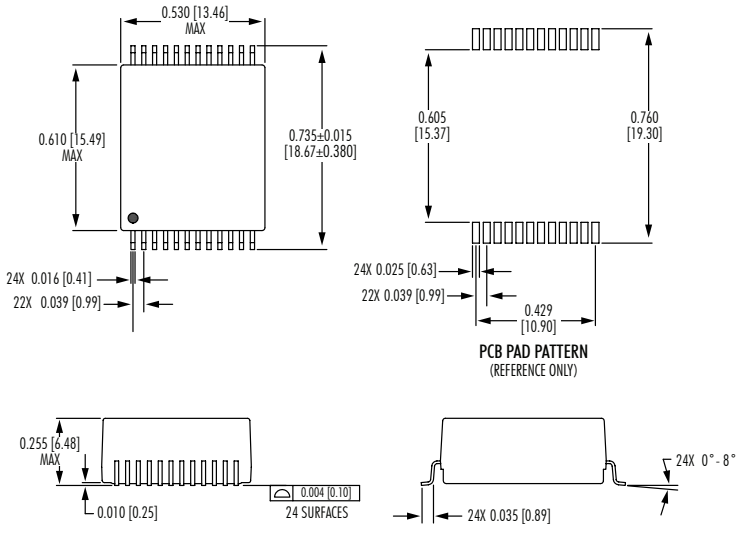

Electrical Schematics

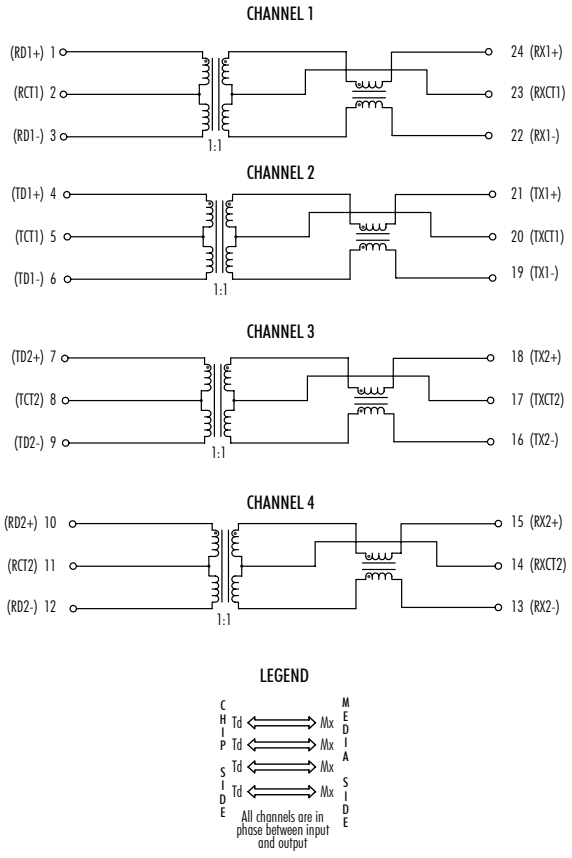

Performance warranty of products offered on this data sheet is limited to the parameters specified. Data is subject to change without notice. Other brand and product names mentioned herein may be trademarks or registered trademarks of their respective owners. © Copyright, 2020. iNRCORE, LLC. All rights reserved.

Tin/Lead Recommended Reflow Profile (Based on J-STD-020D)

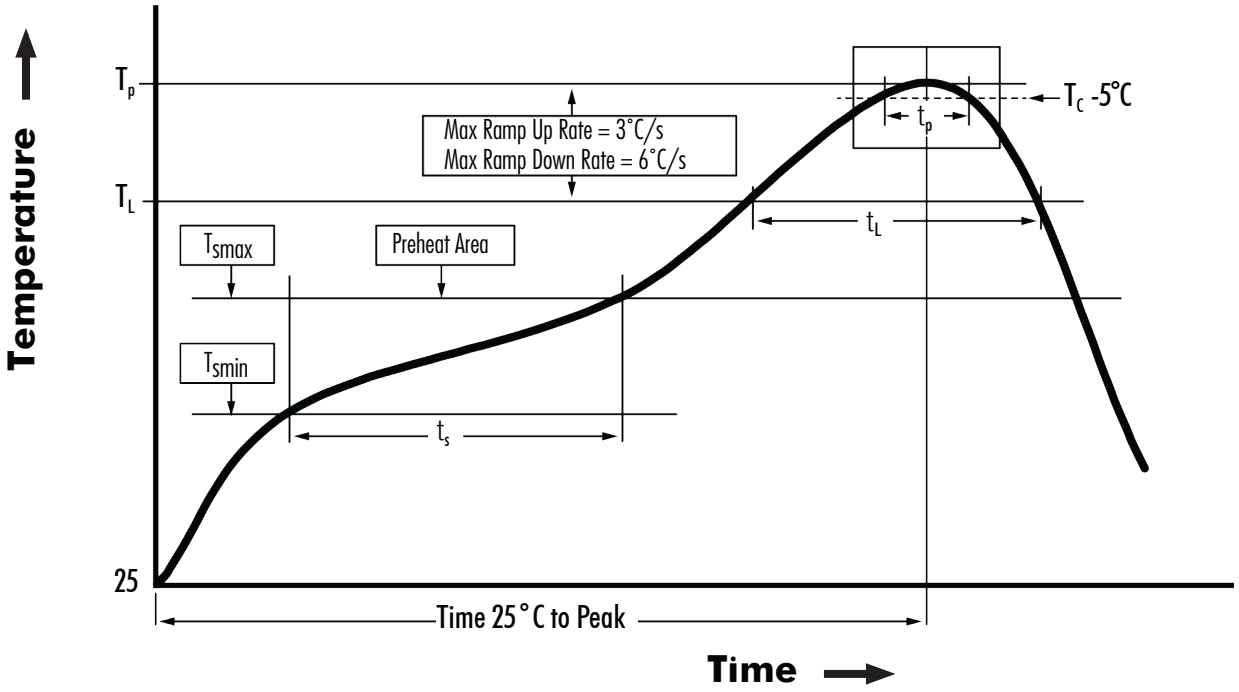

T_{SMIN} (°C)	T_{SMAX} (°C)	T_L (°C)	T_P (°C MAX)	t_S (s)	t_L (s)	t_P (s MAX)	Ramp-up rate (T_L to T_P)	Ramp-down rate (T_P to T_L)	Time 25°C to peak temperature (s MAX)
100	150	183	235	60 - 120	60 - 150	20	3°C/s MAX	6°C/s MAX	360

NOTES:

1. All temperatures measured on the package leads.
2. Maximum times of reflow cycle: 2

iNRCORE, LLC
311 Sinclair Road, Bristol, PA 19007-6812 USA
Tel: +1.215.781.6400 Fax: +1.215.781.6430
www.iNRCORE.com

Performance warranty of products offered on this data sheet is limited to the parameters specified. Data is subject to change without notice. Other brand and product names mentioned herein may be trademarks or registered trademarks of their respective owners. © Copyright, 2020. iNRCORE, LLC. All rights reserved.