MILITARY GRADE 10BASE - T INTERFACE MODULE

Ruggedized



- Fully integrated 10Base-T module for adapter, hub, and motherboard applications.
- Designed to meet IEEE802.3i-1993 10Base-T specifications.
- Operating Temperature: -40°C to +85°C
- Low profile surface mount package
- Moisture Sensitivity Level: 3
- Parts can be screened to MIL-T-21038 and other military specific requirements.

Electrical Specifications @ 25°C

Part Number	Insertion Loss (dB MAX)		Attenuation XMIT (dB MIN)[1]		Return Loss (dB MIN)		Crosstalk (dB MIN)		CM Rejection (dB MIN)					Pri-Sec Isolation (Vrms)
	1 MHz	10 MHz	30 MHz	50 MHz	5 MHz	10 MHz	5 MHz	10 MHz	5 MHz	10 MHz	50 MHz	100 MHz	200 MHz	
10B-2001	1.0	1.0	30	35	18	15	35	35	60	60	55	50	45	1500

[1] Receive and transmit sides meet IEEE 8023i-1993 sepcification, transmit side is enhanced for FCC/VDE class B system emissions requirement.

NOTES:

1. Add suffix "**NL**" for RoHS compliant version; i.e. 10B-1001 becomes **10B-2001NL**.
2. For Tape & Reel packaging, add "T" suffix at the end of the part number: i.e. **10B-2001NLT**
3. Specifications reflect filter sections, additional attenuation is due to pre-distortion resistors.

Mechanicals

10B-2001

Dimensions: inch [mm]
Tolerance (unless otherwise specified): ±0.010 [0.254]

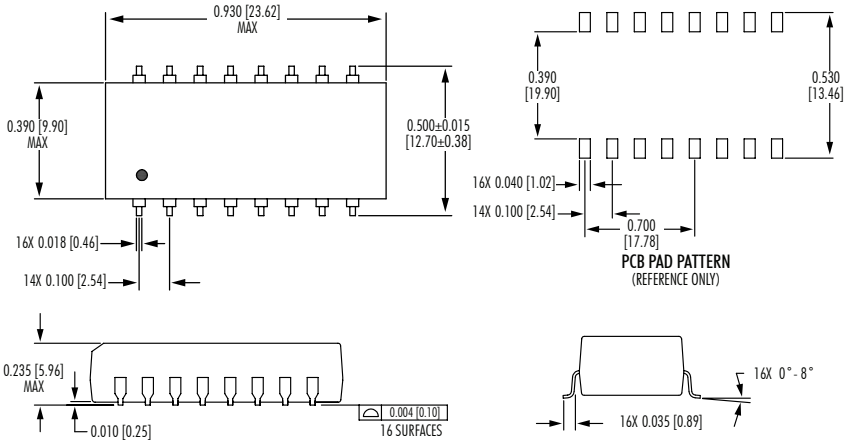

Electrical Schematics

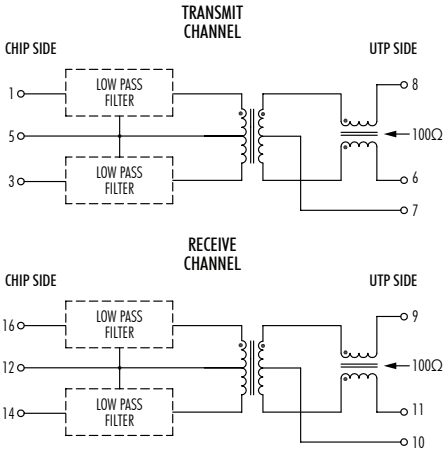

APPLICATION NOTES:

The module contains low pass filters, isolation transformers, and common mode chokes. These components provide impedance matching, equipment isolation, and EMI compression to comply with IEEE requirements. User compliance with FCC/CSPR class B requirements can be achieved by applying rigorous design guidelines to suppress noise mechanisms. Attention to high frequency signal paths, proper PCB grounding techniques, and component placement is critical. Pins 5 and 12, when grounded, provide noise return paths.

At least one of these (typically pin 12) must be coupled with bypass capacitor. Recommended module orientation with respect to RJ45 connector is illustrated in the application circuit. Output pins 6 through 11 should be routed with short, matched traces to the connector for optimum EMI performance. The robust mechanical package withstands IR reflow temperatures up to 235°C. Compliant leads provide excellent solder-joint reliability with K.002 coplanarity. Modules are shippped in tubes.

Performance warranty of products offered on this data sheet is limited to the parameters specified. Data is subject to change without notice. Other brand and product names mentioned herein may be trademarks or registered trademarks of their respective owners. © Copyright, 2020. iNRCORE, LLC. All rights reserved.

Tin/Lead Recommended Reflow Profile (Based on J-STD-020D)

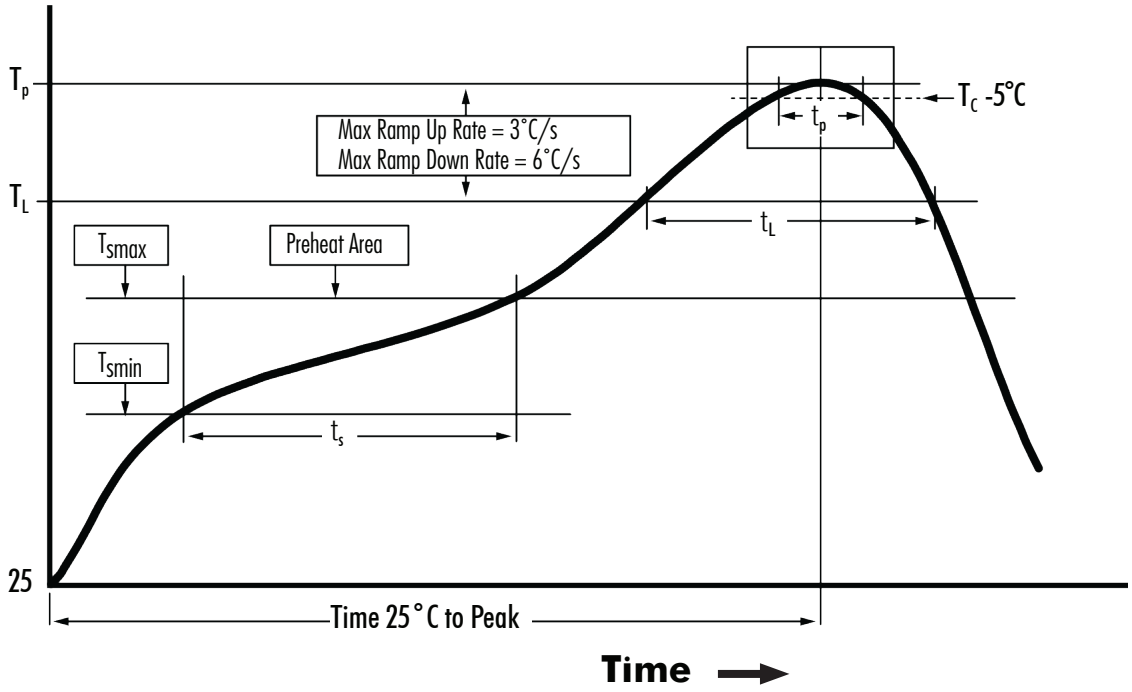

T_{SMIN} (°C)	T_{SMAX} (°C)	T_L (°C)	T_P (°C MAX)	t_S (s)	t_L (s)	t_P (s MAX)	Ramp-up rate (T_L to T_P)	Ramp-down rate (T_P to T_L)	Time 25°C to peak temperature (s MAX)
100	150	183	235	60 - 120	60 - 150	20	3°C/s MAX	6°C/s MAX	360

NOTES:

1. All temperatures measured on the package leads.
2. Maximum times of reflow cycle: 2

iNRCORE, LLC
311 Sinclair Road, Bristol, PA 19007-6812 USA
Tel: +1.215.781.6400 Fax: +1.215.781.6430
www.iNRCORE.com

Performance warranty of products offered on this data sheet is limited to the parameters specified. Data is subject to change without notice. Other brand and product names mentioned herein may be trademarks or registered trademarks of their respective owners. © Copyright, 2020. iNRCORE, LLC. All rights reserved.