HIGH FREQUENCY PLANAR TRANSFORMERS

Ruggedized

PL102XX Series

- Power Rating: up to 250W
- Height: 9.1mm to 10.4mm max
- Footprint: 29.5mm x 26.7mm Max
- Frequency Range: 200kHz to 700kHz
- Isolation (Primary to Secondary): 1750V_{DC}

Electrical Specifications @ 25 °C – Operating Temperature – 40°C to +130 °C

Part Number	Turns Ratio		Schematic	Primary* Inductance (µH MIN)	Leakage** Inductance (µH MAX)	DCR (mΩ MAX				Height (mm)
	Primary	Secondary				Primary A	Primary B	Primary Aux.	Secondary	
DOUBLE INTERLEAVE DESIGNS (HIGHER EFFICIENCY, LOWER DCR AND LOWER LEAKAGE)										
PL10201	4T & 4T	4T (1T:1T:1T:1T)	A1	216	0.3	13	13	—	4.5	10.2
PL10203	5T & 5T (w/5T aux)			340	0.3	15	15	235		
PL10205	6T & 6T (w/2T aux)			480	0.3	21	21	78		
PL10207	7T & 7T (w/3T aux)			660	0.3	50	50	100		
PL10209	8T & 8T			860	0.3	60	60	—		
PL10208	4T & 4T	1T & 1T	A2	216	0.3	13	13	—	0.56 & 0.56	10.2
PL10210	5T & 5T (w/5T aux)			340	0.3	15	15	235		
PL10212	6T & 6T (w/2T aux)			480	0.3	21	21	78		
PL10214	7T & 7T (w/3T aux)			660	0.3	50	50	100		
PL10216	8T & 8T			860	0.3	60	60	—		
SINGLE INTERLEAVE DESIGNS										
PL10230	4T	4T (1T:1T:1T:1T)	B1	54	0.3	13	—	—	4.5	9.1
PL10231	5T (w/5T aux)			85	0.3	15	—	470		
PL10232	6T (w/2T aux)			120	0.3	21	—	156		
PL10233	7T (w/3T aux)			165	0.3	50	—	200		
PL10246	8T			215	0.3	60	—	—		
PL10234	4T	7T & 7T	B2	54	0.3	13	—	—	40 & 40	9.1
PL10235	5T (w/5T aux)			85	0.3	15	—	470		
PL10236	6T (w/2T aux)			120	0.3	21	—	156		
PL10237	7T (w/3T aux)			165	0.3	50	—	200		
PL10247	8T			215	0.3	60	—	—		
PL10238	4T	1T & 1T	B2	54	0.3	13	—	—	1.12 & 1.12	9.1
PL10239	5T (w/5T aux)			85	0.3	15	—	470		
PL10240	6T (w/2T aux)			120	0.3	21	—	156		
PL10241	7T (w/3T aux)			165	0.3	50	—	200		
PL10248	8T			215	0.3	60	—	—		
PL10242	4T	2T & 1T	B3	54	0.3	13	—	—	1.8 & 0.6	9.1
PL10243	5T (w/5T aux)			85	0.3	15	—	470		
PL10244	6T (w/2T aux)			120	0.3	21	—	156		
PL10245	7T (w/3T aux)			165	0.3	50	—	200		
PL10249	8T			215	0.3	60	—	—		

Notes: 1. Parts can be ordered Non-Lead by adding "NL" to the part number (i.e. **PL10247NL**)
2. Option Tape & Reel packaging can be ordered by adding a "T" suffix at the end of the part number (i.e. **PL10235T**)

Mechanicals

NOTE: The below is a universal footprint for a component that has all 11 pins populated. For a given part number it is only necessary to provide pads for the terminations shown

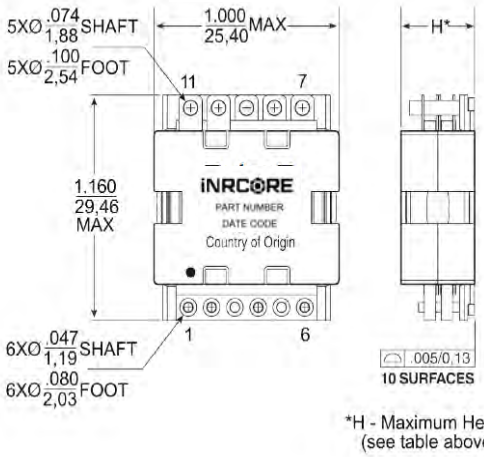

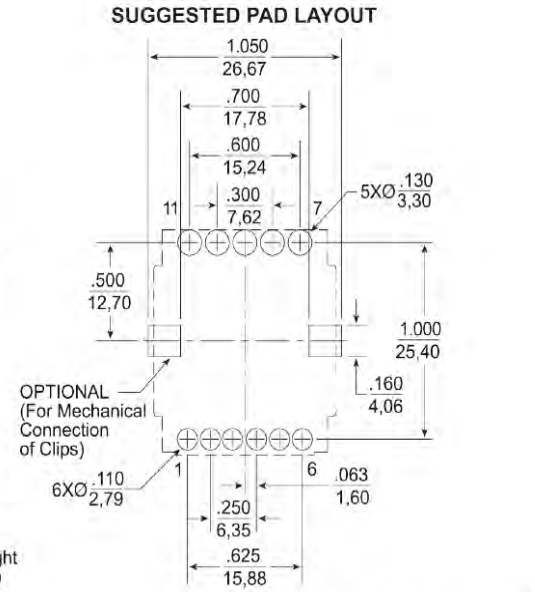

Electrical Schematics

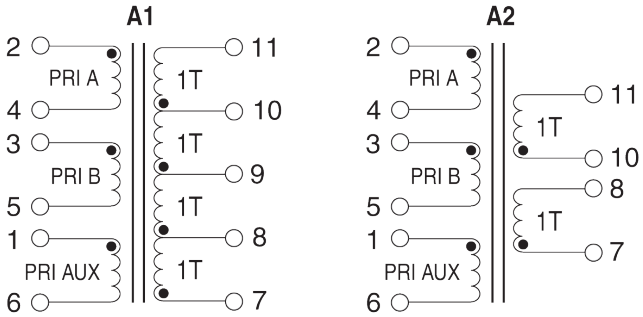

— SINGLE INTERLEAVE SCHEMATICS —

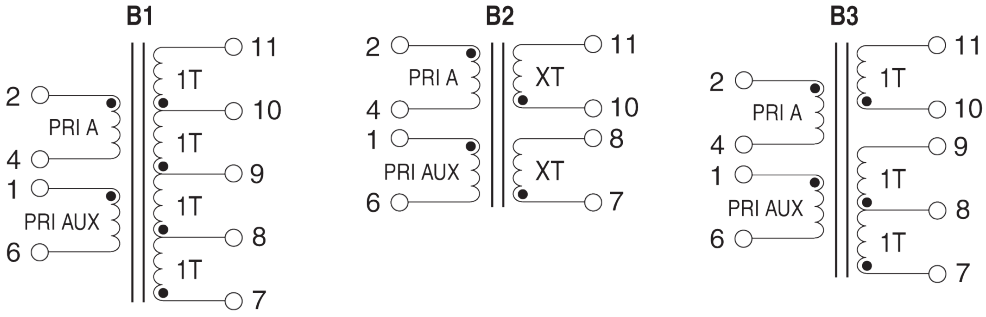

PL102XX Transformer Winding Configuration Matrix

The following is a matrix of the winding configurations that are pos-sible with the iNRCORE PL102XX Planar Transformer Platform. The package is typically capable of handling between 150-250W of power depending on the application, ambient conditions and available cooling.

Once a configuration is selected, the formulae and charts can be used to determine the approximate power dissipation and temperature rise of the component in a given application.

High Efficiency Double Interleaved Designs

				SECONDARY WINDINGS						
				Single Winding			Tapped Winding			Dual Winding
		Turns		1T	2T	4T	1:1	1:3	2:2	1T & 1T
			DCR (mΩ)	0.28	1.12	4.5	1.12	4.5	4.5	1.12
PRIMARY WINDINGS	Single Winding	4T	5	PL10208	PL10208	PL10201	PL10208	PL10201	PL10201	PL10208
		5T	7.5	PL10210	PL10210	PL10203	PL10210	PL10203	PL10203	PL10210
		6T	12	PL10212	PL10212	PL10205	PL10212	PL10205	PL10205	PL10212
		7T	30	PL10214	PL10214	PL10207	PL10214	PL10207	PL10207	PL10214
		8T	20	PL10208	PL10208	PL10201	PL10208	PL10201	PL10201	PL10208
		10T	30	PL10210	PL10210	PL10203	PL10210	PL10203	PL10203	PL10210
		12T	48	PL10212	PL10212	PL10205	PL10212	PL10205	PL10205	PL10212
		14T	120	PL10214	PL10214	PL10207	PL10214	PL10207	PL10207	PL10214
		16T	140	PL10216	PL10216	PL10209	PL10216	PL10209	PL10209	PL10216
	Dual Winding	4T & 4T	20	PL10208	PL10208	PL10201	PL10208	PL10201	PL10201	PL10208
		5T & 5T	30	PL10210	PL10210	PL10203	PL10210	PL10203	PL10203	PL10210
		6T & 6T	48	PL10212	PL10212	PL10205	PL10212	PL10205	PL10205	PL10212
		7T & 7T	120	PL10214	PL10214	PL10207	PL10214	PL10207	PL10207	PL10214
		8T & 8T	140	PL10216	PL10216	PL10209	PL10216	PL10209	PL10209	PL10216

Lower Cost Single Interleaved Designs

				SECONDARY WINDINGS											
				Single Winding					Tapped Winding					Dual Winding		
		Turns		1T	2T	3T	4T	7T	1:1	1:2	1:3	2:2	7:7	1T & 1T	1T & 2T	7T & 7T
			DCR (mW)	0.56	2.24	3.4	4.5	20	2.24	3.4	4.5	4.5	80	2.24	4.5	80
PRIMARY WINDINGS	Single Winding	4T	10	PL10238	PL10238	PL10242	PL10230	PL10234	PL10238	PL10242	PL10230	PL10230	PL10234	PL10238	PL10242	PL10234
		5T	15	PL10239	PL10239	PL10243	PL10231	PL10235	PL10239	PL10243	PL10231	PL10231	PL10235	PL10239	PL10243	PL10235
		6T	24	PL10240	PL10240	PL10244	PL10232	PL10236	PL10240	PL10244	PL10232	PL10232	PL10236	PL10240	PL10244	PL10236
		7T	60	PL10241	PL10241	PL10245	PL10233	PL10237	PL10241	PL10245	PL10233	PL10233	PL10237	PL10241	PL10245	PL10237
		8T	70	PL10248	PL10248	PL10249	PL10246	PL10247	PL10248	PL10249	PL10246	PL10246	PL10247	PL10248	PL10247	PL10247

NOTES: 1. The base PN (ie: PL10201) uses an ungapped core. The minimum primary inductance for any configuration can be calculated as:

Primary Inductance (µH Min) = 3.4 * (Primary Turns)^2

2. The above base part numbers (PL102XX) are available from stock
3. It is possible to add a small gap to the transformer. Gapped transformers are non-standard and can be made available upon request, but are not typically available from stock. To request a gapped version of the transformer, add a suffix "G" to the base number (ie: **PL10201G**). The nominal inductance with a gap can be calculated as:
Primary Inductance (µH Nominal) = 2.2 * (Primary Turns)^2

Notes from Tables

1. The above transformers have been tested and approved by iNRCORE's IC partners and are cited in the appropriate datasheet or evalu-ation board documentation at these companies. To determine which IC and IC companies are matched with the above trans-formers, please refer to the IC cross reference on the iNRCORE web page.
2. To determine if the transformer is suitable for your application, it is necessary to ensure that the temperature rise of the component (ambient plus temperature rise) does not exceed its operating temperature. To determine the approximate temperature rise of the transformer, refer to the graphs below.
3. The "NL" suffix indicates an RoHS-compliant part number. Non-NL suffixed parts are not necessarily RoHS compliant, but are electri-cally and mechanically equivalent to NL versions. If a part number does not have the "NL" suffix, but an RoHS compliant version is required, please contact iNRCORE for availability.

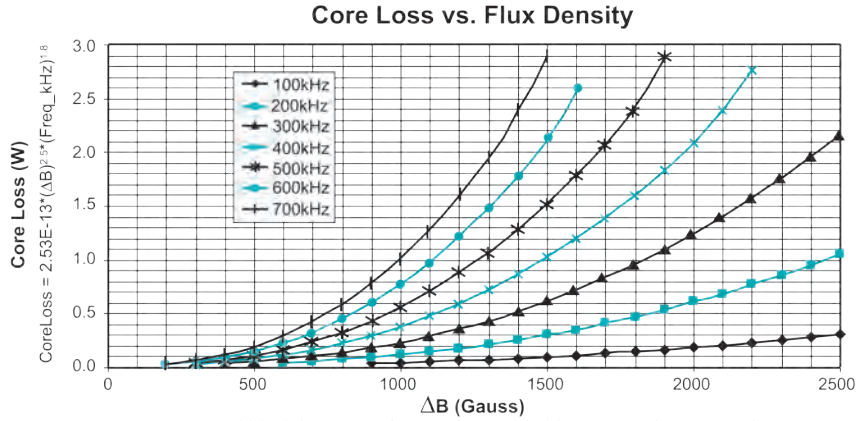

ΔB = 120E3 * Vin_min * Dutycycle_max / (Freq_kHz * Pri_Turns)

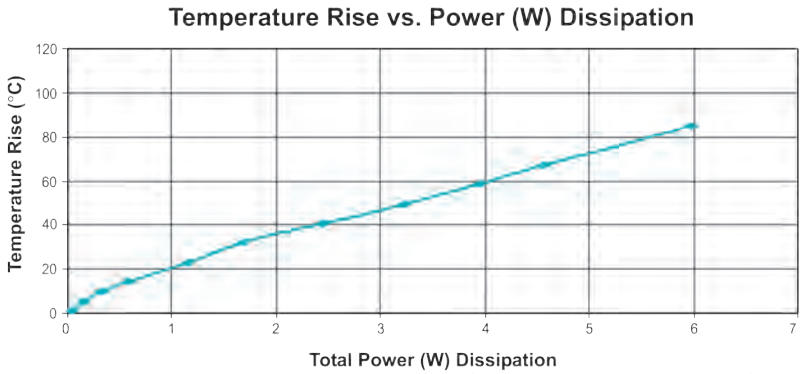

Total Power Dissipation (W) = .001 * (DCRprimary * $I_{RMS_primary}^2$ + DCRsecondary * $I_{RMS_secondary}^2$) + Core Loss (W)

For More Information

iNRCORE,LLC
311 Sinclair Road Bristol,
PA 19007-6812 U.S.A
Tel: + 1.215.781.6400
Fax: +1.215.7816430

Global Sales Representatives and Locations:
http://www.inrcore.com

Performance warranty of products offered on this data sheet is limited to the parameters specified. Data is subject to change without notice. Other brand and product names mentioned herein may be trademarks or registered trademarks of their respective owners. © Copyright, 2020. iNRCORE, LLC. All rights reserved.