HIGH FREQUENCY FLAT COIL PLANAR TRANSFORMER

Ruggedized

PL104XX Series



Power Rating: up to 300W
Height: 10.4mm to 11.9mm
Max Footprint: 29.5mm x 26.7mm
Max Frequency Range: 200kHz to 700kHz
Isolation (Primary to Secondary): 1750V_{DC}
Moisture Sensitivity Level:1

Electrical Specifications @ 25 °C – Operating Temperature – 40°C to +125 °C

Part Number	Turns Ratio		Schematic	Primary* Inductance	Leakage** Inductance	DCR (m Ω) MAX)				Height Max
	Primary	Secondary		(µH MIN)	(µH MAX)	Primary A	Primary B	Primary Aux.	Secondary	(mm)
PL10401	4T & 4T	4T (1T:1T:1T:1T)	A1	211	0.3	6.8	6.8	-	4.5	10.4
PL10402	5T & 5T			330	0.45	8.5	8.5	-		
PL10403	6T & 6T			423	0.6	10.2	10.2	-		11.9
PL10404	7T & 7T			588	0.83	11.8	11.8	-		
PL10405	8T & 8T			768	1.2	13.4	13.4	-		
PL10406	4T& 4T	1T & 1T	A2	216	0.45	6.8	6.8	-	0.56 & 0.56	10.4
PL10407	5T & 5T			340	0.84	8.5	8.5	-		
PL10408	6T & 6T			480	1.0	10.2	10.2	-		11.9
PL10409	7T & 7T			660	1.2	11.8	11.8	-		
PL10410	8T & 8T			860	1.7	13.4	13.4	-		

Notes: 1. Parts can be ordered Non-Lead by adding "NL" to the part number (i.e. **PL10401NL)**

2. Optional Tape & Reel packaging can be ordered by adding a "T" suffix at the end of the part number (i.e. **PL10408NLT)**

Mechanical

PL104XX

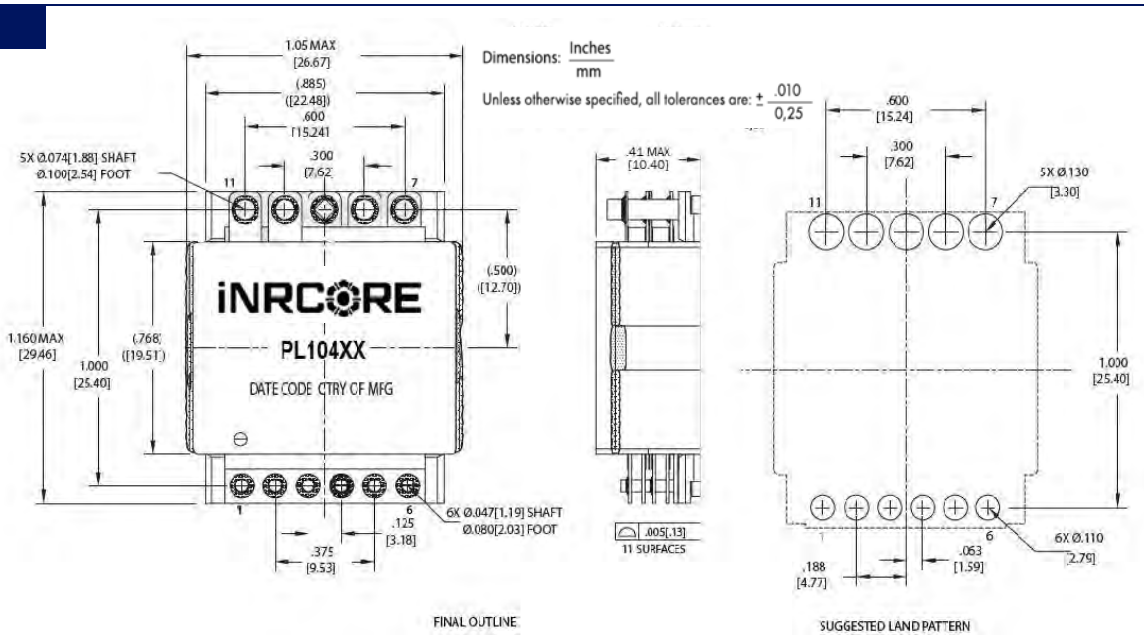

Electrical Schematic

PL104XX

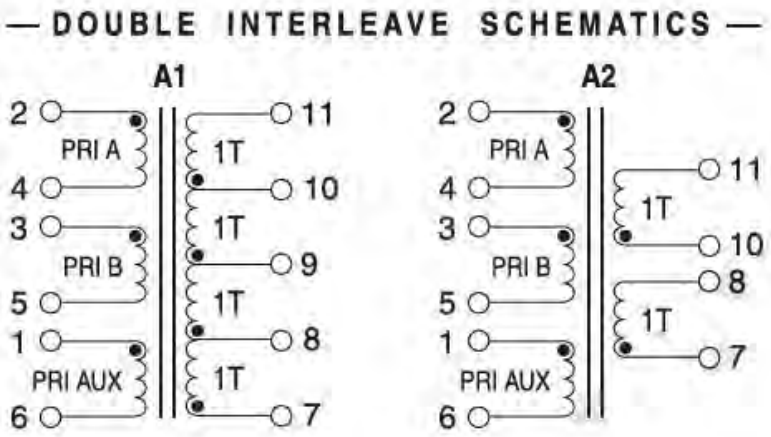

Notes from Tables

1. Inductance is measured with primary windings connected in series (2 to 5, with 3 and 4 shorted.)
2. Leakage inductance is measured on winding (2-5) with (3-4) and (7,8,9,10,11) shorted.
3. The "NL" suffix indicates a RoHS compliant part number.
4. Optional Tape & Reel packaging can be ordered by adding a "T" suffix to the complete number (**PL10401NLT or PL10401T**).
5. To determine if the transformer is suitable for your application, it is neccesary to ensure that the temperature rise of the component (ambient plus temperature rise) not exceed it's operating tem-perature. To determine the approximate temperature rise of the transformer refer to the graphs below.

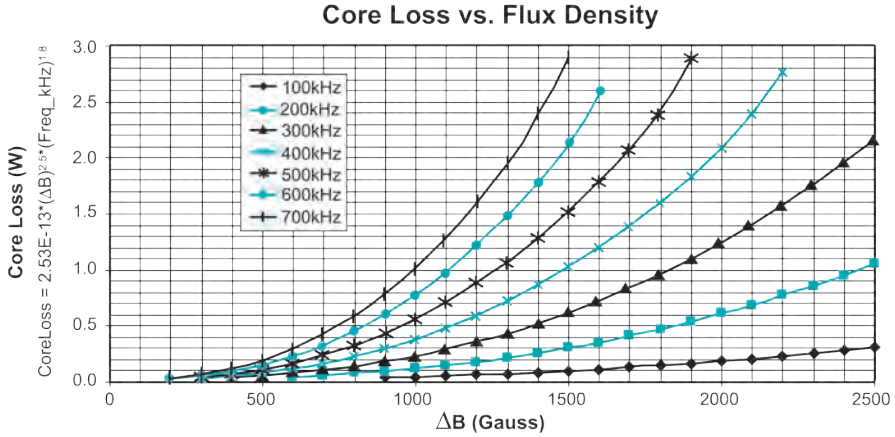

ΔB = 120E3 * Vin_min * Dutycycle_max / (Freq_kHz * Pri_Turns)

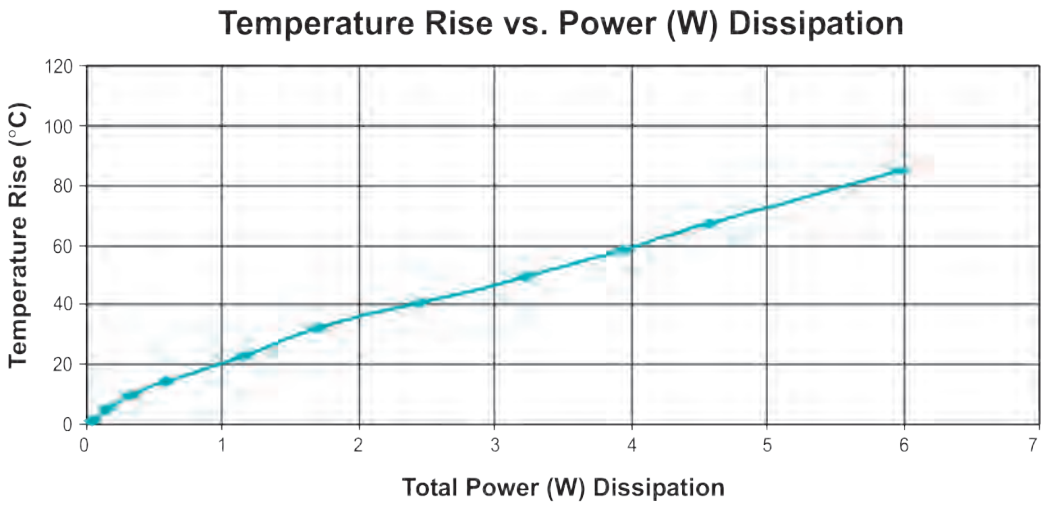

Total Power Dissipation (W) = .001 * (DCRprimary * $I_{RMS_primary}^2$ + DCRsecondary * $I_{RMS_secondary}^2$) + Core Loss (W)

For More Information

iNRCORE,LLC
311 Sinclair Road Bristol,
PA 19007-6812 U.S.A
Tel: + 1.215.781.6400
Fax: +1.215.7816430

Global Sales Representatives and Locations:
http://www.inrcore.com

Performance warranty of products offered on this data sheet is limited to the parameters specified. Data is subject to change without notice. Other brand and product names mentioned herein may be trademarks or registered trademarks of their respective owners. © Copyright, 2020. iNRCORE, LLC. All rights reserved.