SMT CURRENT SENSE TRANSFORMERS

Ruggedized

PL325X

- Height: 5.5mm Max
- Footprint: 8.4mm x 7.2mm Max Currency Rating: Up to 10A
- Frequency Range: 50kHz to 1MHz
- Surface Mount Package: Pick and Place Compatible
- Varnished Windings
- Operating Temperature: -55°C to +130°C
- Storage Temperature: -55°C to +130°C
- Isolation Voltage: 500 Vrms Max
- Moisture Sensitivity Level: 1
- Solder Reflow Processing: 235°C Peak Temperature, ΔT<3°C/sec
- Lead Finish: Hot Solder Dipped – Sn63%/Pb37%
- Meets Environmental Requirements: MIL-PRF-27F Grade 5 Class
- Space Grade versions that meet workmanship LAW MIL-STD-981 are available upon special request.

Electrical Specifications @ 25°C — Operating Temperature -55°C to +130°C

Part Number [5,6]	Turns Ratio	Current Rating (A) [2]	Secondary Inductance (mH MIN)	DCR (mΩ MAX)		Hipot (VRMS)
				Primary (8-7)	Secondary (1-3)	
PL3250	1:20	10	0.08	6	550	500
PL3251	1:30	10	0.18	6	870	500
PL3252	1:40	10	0.32	6	1140	500
PL3253	1:50	10	0.50	6	1500	500
PL3254	1:60	10	0.72	6	2250	500
PL3255	1:70	10	0.98	6	4750	500
PL3256	1:100	10	2.00	6	5500	500
PL3257	1:125	10	3.00	6	6500	500

NOTES:

1. The temperature of the component (ambient temperature plus temper-ature rise) must be within the specified operating temperature range.
2. The maximum current rating is based upon temperature rise of the component and represents the dc current which will cause a typical temperature rise of 40°C with no air flow when both one turn windings connected in parallel
3. To calculate the value of the terminating resistor (Rt) use the following formula: $Rt\ (W) = V_{REF} * N / (Ipeak_primary)$
4. The peak flux density of the device must remain below 2000 Gauss. To calculate the peak flux density for a uni-polar current use the following formula:
   $B_{PK} = 14.29 * V_{REF} * (Duty_Cycle_Max) * 10^8 / (N * Freq_kHz)$
   * for bi-polar current applications divide B_{PK} as calculated above by 2.
5. For RoHS compliant parts add suffix NL to the part number.
6. Add T suffix to the part number for tape and reel packaging.

Mechanical

Schematic

PL325X

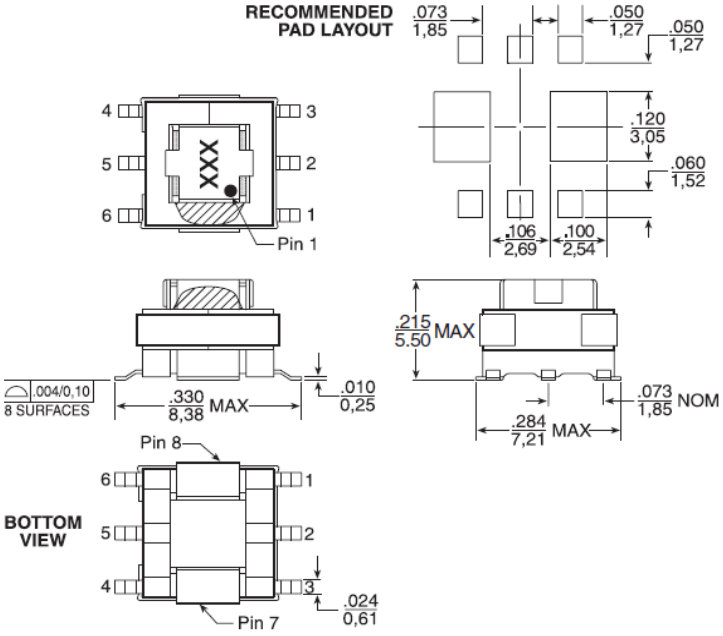

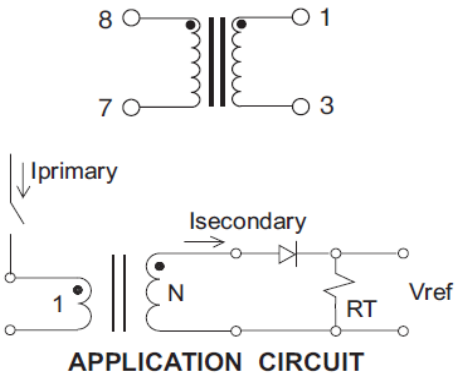

Weight . . . . . .0.34 grams
Tray 120/tray
Tape & Reel 900/reel
Coplanarity . . . . . 0.004 inches

Dimensions: Inches / mm

Unless otherwise specified, all tolerances are ± .010 / 0,25

Transceiver Tin/Lead Recommended Reflow Profile (Based on J-STD-020D)

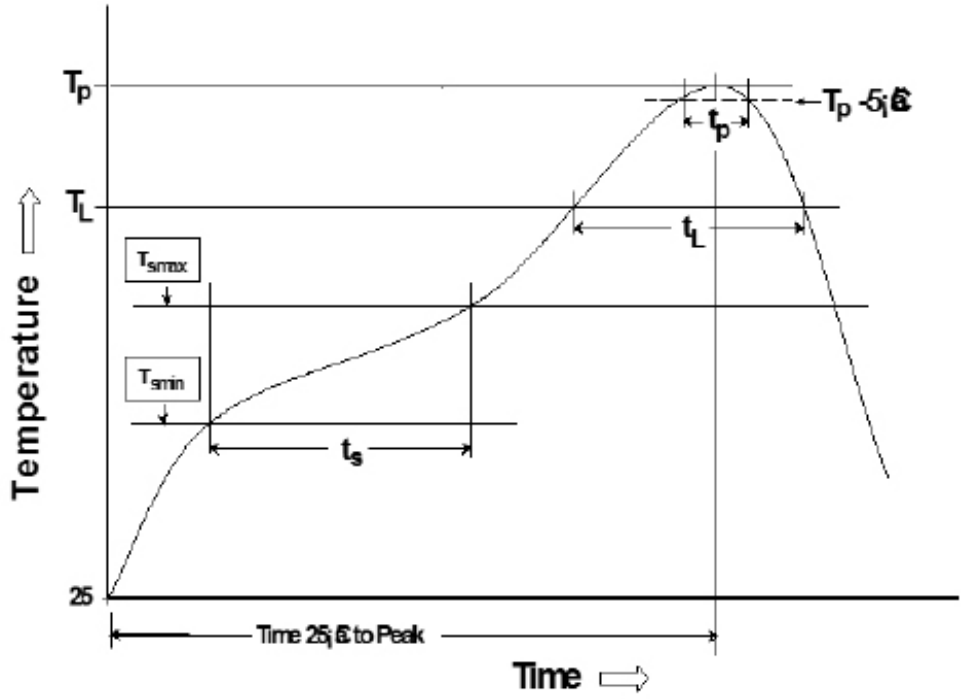

T_{SMIN} (°C)	T_{SMAX} (°C)	T_L (°C)	T_P (°C MAX)	t_S (s)	t_L (s)	t_P (s MAX)	Ramp-up rate (T_L to T_P)	Ramp-down rate (T_P to T_L)	Time 25°C to peak temperature (s MAX)
100	150	183	225	60-120	60-150	20	3°C/s MAX	6°C/s MAX	360

Notes:
1. All temperatures measured on the package leads.
2. Maximum times of reflow cycle: 2.

For More Information

iNRCORE,LLC
311 Sinclair Road Bristol,
PA 19007-6812 U.S.A
Tel: + 1.215.781.6400
Fax: +1.215.7816430

Global Sales Representatives and Locations:
http://www.inrcore.com

Performance warranty of products offered on this data sheet is limited to the parameters specified. Data is subject to change without notice. Other brand and product names mentioned herein may be trademarks or registered trademarks of their respective owners. © Copyright, 2020. iNRCORE, LLC. All rights reserved.