Discontinuous High Voltage Flyback Transformer

Ruggedized

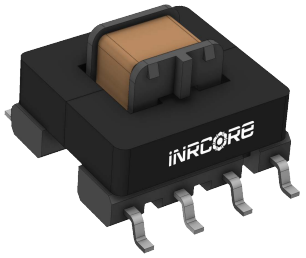

- Frequency Range: 80 kHz to 350 kHz
- Height: 5,9mm MAX
- Class S Temperature Rating
- Moisture Sensitivity Level: 1
- Recommend for use with LT8304-1 (R_{FB} listed in "Notes")
- V_{IN} from 5V to 15V

Electrical Specifications @ 25 °C – Operating Temperature – 55°C to +125 °C

Part Number	Turns Ratio	Voltage Output (V_{OUT})	Primary Inductance (uH)	Primary Inductance Leakage (nH MAX)	DCR (Ω MAX)	
					(1-4)	(5-8)
PL4761	1:20	1400 [2]	8.5-9.5	650	.50	80
PL4762	1:30	1800 [3]	8.5-9.5	750	.50	115
PL4763	1:40	2000 [4]	8.5-9.5	850	.50	150

Notes:
1. ET max 20V-µsec
2. R_{FB} = 680K
3. R_{FB} = 600K
4. R_{FB} = 500K
5. Terminal 8 must always be at or near ground potential

Mechanical

PL47XX

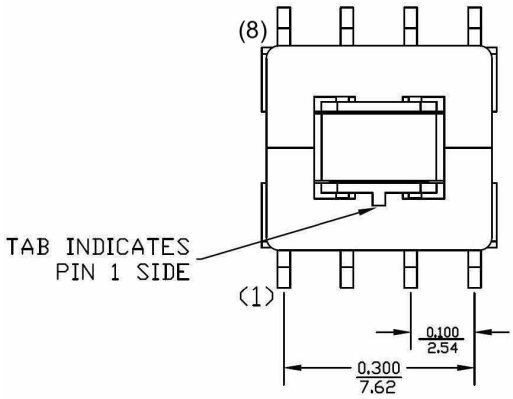

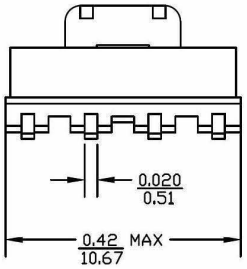

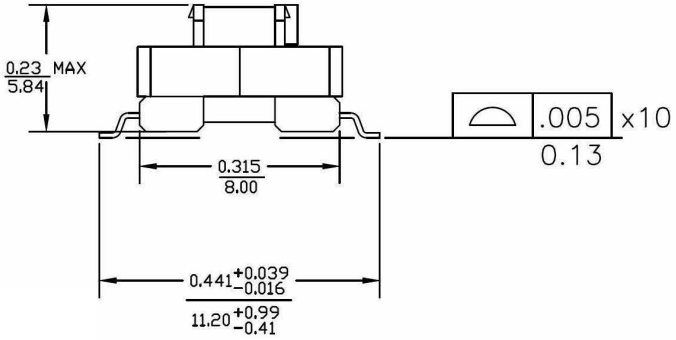

Dimensions: Inches / mm

Unless otherwise specified, all tolerances are: ± .010 / 0,25

Electrical Schematic

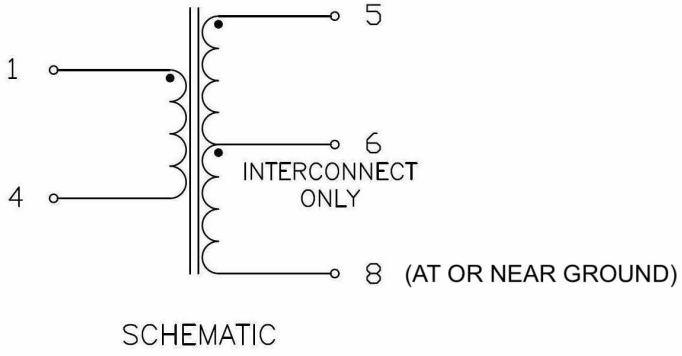

SCHEMATIC

Tin/Lead Recommended Reflow Profile (Based on J-STD-020D)

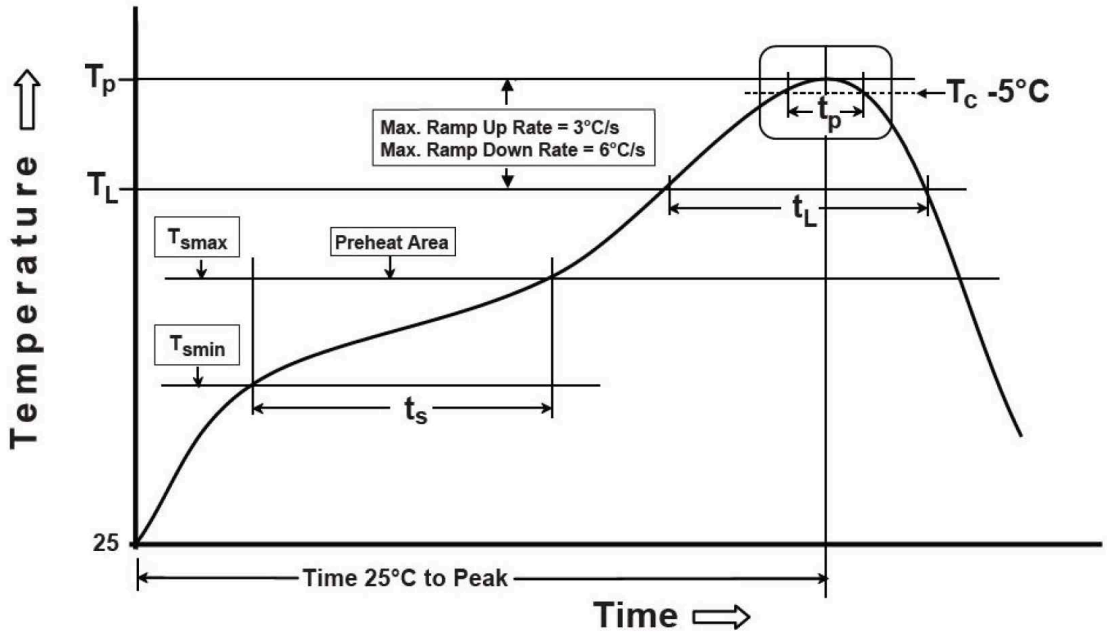

T_{SMIN} (°C)	T_{SMAX} (°C)	T_L (°C)	T_P (°C MAX)	t_S (s)	t_L (s)	t_P (s MAX)	Ramp-up rate (T_L to T_P)	Ramp-down rate (T_P to T_L)	Time 25°C to peak temperature (s MAX)
100	150	183	235	60-120	60-150	20	3°C/s MAX	6°C/s MAX	360

Notes:

1. All temperatures measured on the package leads.
2. Maximum times of reflow cycle: 2.

For More Information

iNRCORE,LLC
311 Sinclair Road Bristol,
PA 19007-6812 U.S.A
Tel: + 1.215.781.6400
Fax: +1.215.7816430

Global Sales Representatives and Locations:
http://www.inrcore.com

Performance warranty of products offered on this data sheet is limited to the parameters specified. Data is subject to change without notice. Other brand and product names mentioned herein may be trademarks or registered trademarks of their respective owners. © Copyright, 2021. iNRCORE, LLC. All rights reserved.