Copperhead™ High Speed Dual Transformers

Ruggedized

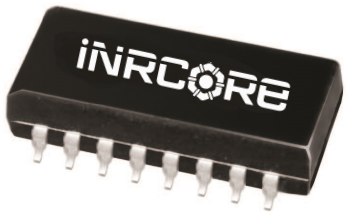

- Compliant with ANSI X3T111, Fiber Channel, FC-PH-3 for quarter/full speed applications, SMPTE, IEEE1394 Firewire
- Moisture Sensitivity: Level 3
- Pick and place compatible
- Peak temperature profile 250°C; NL parts peak temperature is 245°C

Electrical Specifications @ 25°C — Operating Temperature -55 C to +125°C

Part Number	Turns Ratio (±5%)	Primary Inductance (µH MIN)	Rise Time @ 20& to 80% (pS MAX)	DC Resistance (Ω MAX)	Hi-Pot (Vrms MIN)	Insertion Loss (dB MAX)	Application Nominal Bit Rate (Mbaud)
T-330SCT	1CT:1CT	26 @ 1Vrms, 100kHz	350	0.2	1,500	-1.5 @ 15-165MHz	265.6 (1/4 speed)
T-531SCT	1CT:1CT	7.5@1Vrms, 100kHz	325	0.2	1,500	-2.0 @ 50-265MHz	531 (half speed)
T-1062SCT	1CT:1CT	3.75@1Vrms, 100kHz	280	0.2	1,500	-2.0 @ 100-531MHz	1,062.5 (full speed)
T-1250SCT	1CT:1CT	3.75@1Vrms, 100kHz	280	0.2	1,500	-2.0@125-650MHz	1,250
T-1485SCT	1CT:1CT	3.75@1Vrms, 100kHz	270	0.2	1,500	-2.0	1,485 (SMTPE)
T-3200SCT	1:1	0.70	200	0.2	1,500	-4.5	1,485 (SMTPE)

Note: For RoHS compliant parts, add suffix "NL" to the end of part number.

Mechanicals

T-330SCT, T-531SCT, T-1062SCT, T-1250SCT, and T-1485SCT

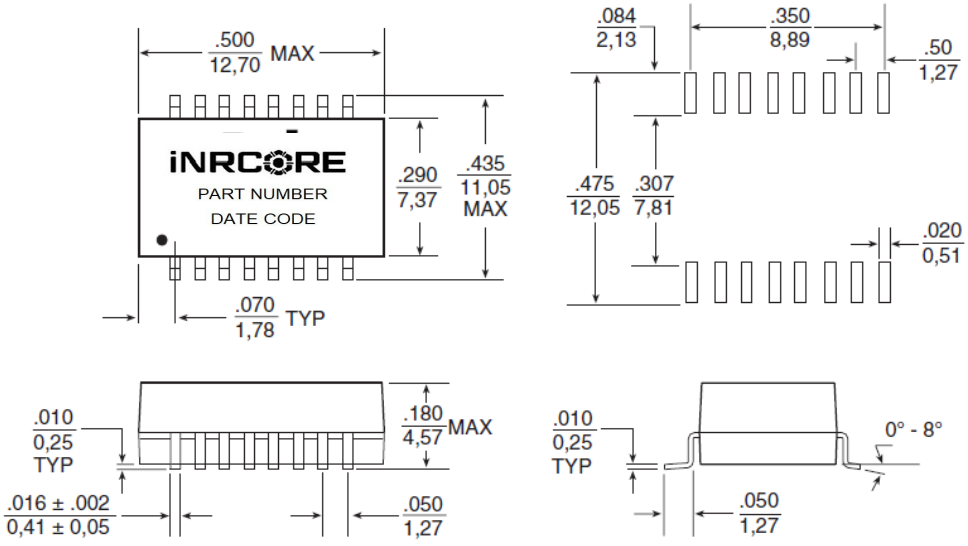

Electrical Schematics

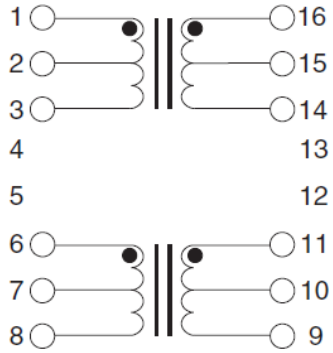

Weight . . . . . 1.0 grams
Tape & Reel 400/reel
Dimensions: Inches / mm

Unless otherwise specified, all tolerances are ± .005 / 0,13

Mechanical

T-3200SCT

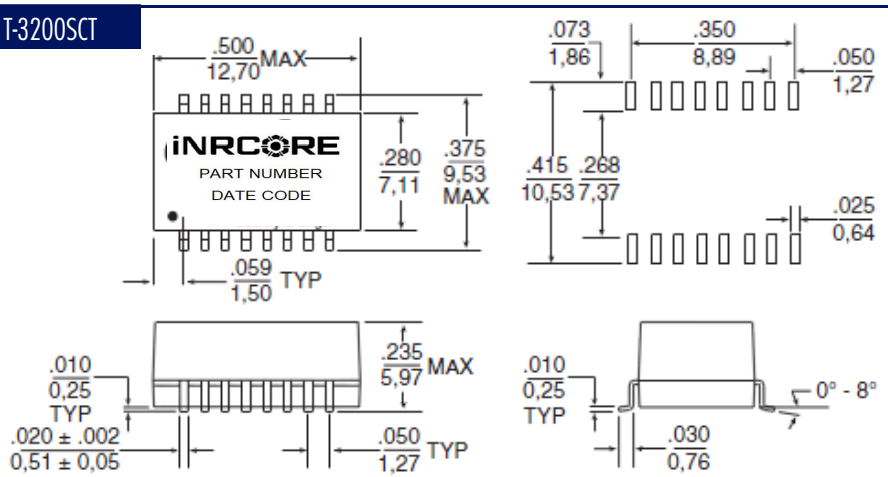

Electrical Schematic

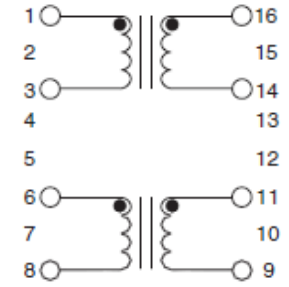

Weight . . . . . 1.0 grams
Tape & Reel 600/reel
Dimensions: Inches / mm

Unless otherwise specified, all tolerances are ± .005 / 0,13

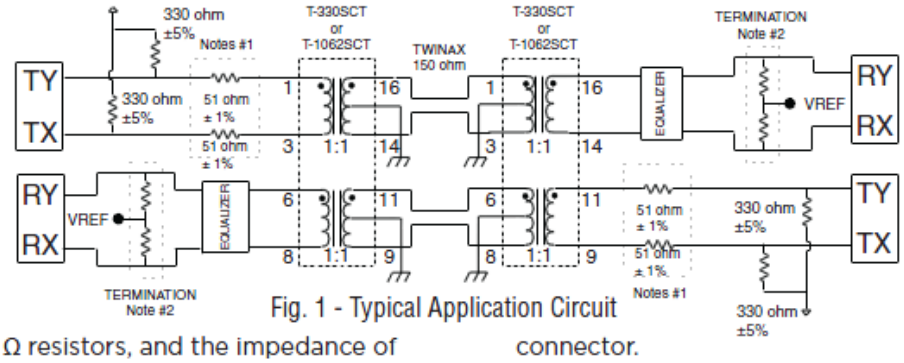

Fig. 1 - Typical Application Circuit

1. The transformer, 51 Ω resistors, and the impedance of the driver are matched to achieve the best return loss (S11) for the transmitter of the 150 Ω system.
2. The total impedance of termination resistor network is 150 Ω.
3. When laying out PCB, transmission line methods must be utilized to maintain return loss and signal integrity. Transformer must be located within .50 of the DB9 connector.
4. It is recommended that the center tap (CT) of transformer(s), cable side, be connected to earth/chassis (cable shield) ground either directly or via a transient voltage suppressor (TVS) type component and earth/chassis ground should be "AC-coupled" to signal (digital) ground through a 0.27uF, 500v capacitor.

Non-Lead Recommended Reflow Profile (Based on J-STD-020D)

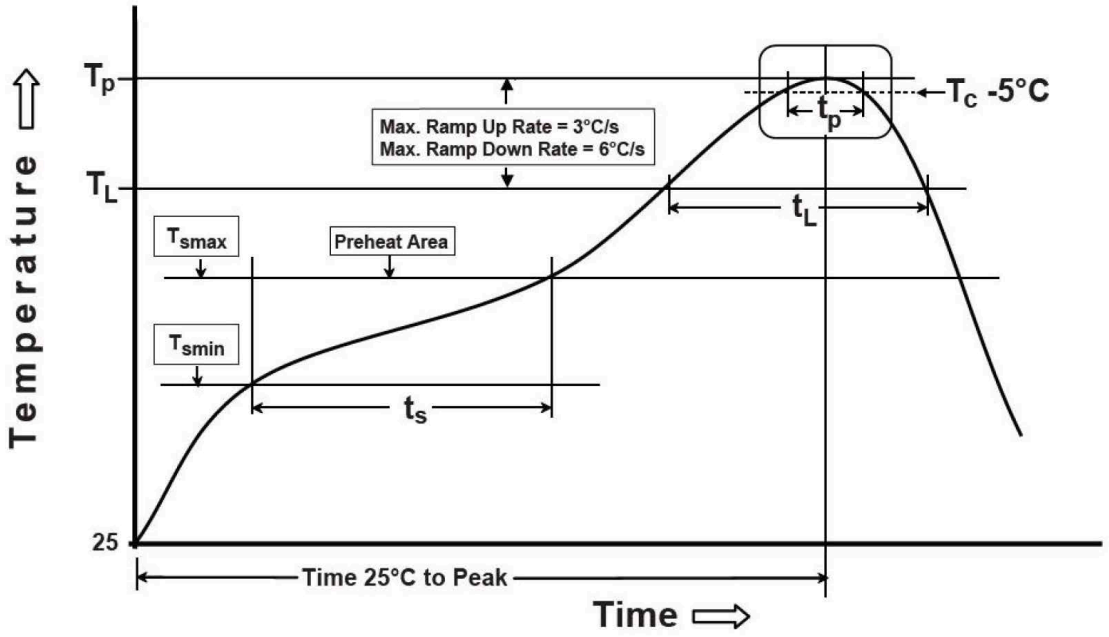

T_{SMIN} (°C)	T_{SMAX} (°C)	T_L (°C)	T_P (°C MAX)	t_S (s)	t_L (s)	t_P (s MAX)	Ramp-up rate (T_L to T_P)	Ramp-down rate (T_P to T_L)	Time 25°C to peak temperature (s MAX)
150	200	217	245	60-120	60-150	30	3°C/s MAX	6°C/s MAX	480

Notes:

1. All temperatures measured on the package leads.
2. Maximum times of reflow cycle: 2.

Tin/Lead Recommended Reflow Profile (Based on J-STD-020D)

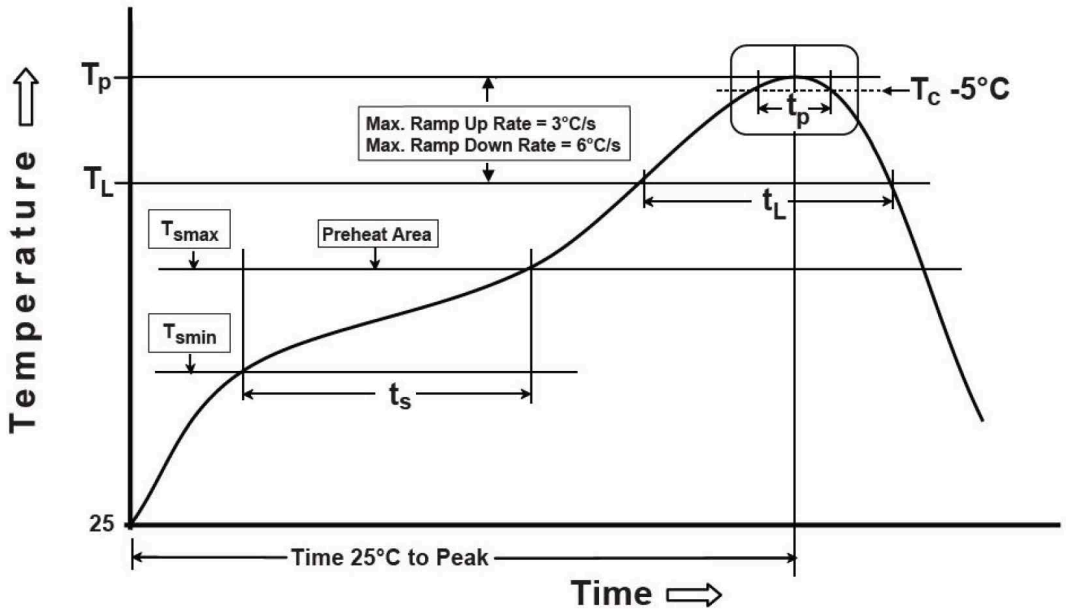

T_{SMIN} (°C)	T_{SMAX} (°C)	T_L (°C)	T_P (°C MAX)	t_S (s)	t_L (s)	t_P (s MAX)	Ramp-up rate (T_L to T_P)	Ramp-down rate (T_P to T_L)	Time 25°C to peak temperature (s MAX)
100	150	183	235	60-120	60-150	20	3°C/s MAX	6°C/s MAX	360

Notes:

1. All temperatures measured on the package leads.
2. Maximum times of reflow cycle: 2.

For More Information

iNRCORE,LLC
311 Sinclair Road Bristol,
PA 19007-6812 U.S.A
Tel: + 1.215.781.6400
Fax: +1.215.7816430

Global Sales Representatives and Locations:
http://www.inrcore.com

Performance warranty of products offered on this data sheet is limited to the parameters specified. Data is subject to change without notice. Other brand and product names mentioned herein may be trademarks or registered trademarks of their respective owners. © Copyright, 2020. iNRCORE, LLC. All rights reserved.