RING TONGUE (R type) Non-insulated



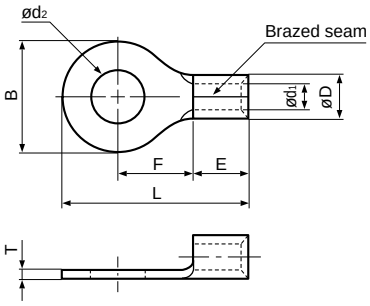

Certificate No.: E42024 LR20812 JQ0608019 JQID08002 JQMY14001 JIS C 2805

Applicable Wire AWG#(mm²)	Stud size		Part No.		Standard	Dimensions mm (in.)								Tool No.	Qty/box
	American	Metric	JST	JIS		ød2	B	L	F	E	øD	ød1	T		
26 to 22 (0.2 to 0.5)	1-2	2	0.5-2			2.2 (.087)	5.2 (.205)	12.4 (.488)	5.8 (.228)	4.0 (.157)	2.0 (.079)	1.0 (.039)	0.5 (.020)	YHT-2622 YA-1 YA-2	1,000
	3-4	3	0.5-3			3.2 (.126)	5.2 (.205)	12.4 (.488)	5.8 (.228)						
	5-6	3.5	0.5-3.7			3.7 (.146)	6.6 (.260)	15.0 (.591)	7.7 (.303)						
	8	4	0.5-4			4.3 (.169)	6.6 (.260)	15.0 (.591)	7.7 (.303)						
	10	5	0.5-5			5.3 (.209)	8.0 (.315)	15.0 (.591)	7.0 (.276)						
22 to 16 (0.25 to 1.65)	1-2	2	1.25-2			2.2 (.087)	5.5 (.217)	11.5 (.453)	4.0 (.157)	4.8 (.189)	3.4 (.134)	1.7 (.067)	0.8 (.031)	YHT-2210 YA-1 YA-2 YA-4	1,000
	3-4	3	1.25-3	R1.25-3		3.2 (.126)	5.5 (.217)	11.5 (.453)	4.0 (.157)						
	3-4	3	1.25-MS3			3.2 (.126)	5.5 (.217)	13.2 (.520)	5.6 (.220)						
	3-4	3	1.25-M3.3			3.2 (.126)	6.6 (.260)	14.4 (.567)	6.3 (.248)						
	3-4	3	1.25-L3			3.2 (.126)	8.0 (.315)	15.8 (.622)	7.0 (.276)						
	5-6	3.5	1.25-3.7			3.7 (.146)	5.5 (.217)	11.5 (.453)	4.0 (.157)						
	5-6	3.5	1.25-P3.5			3.7 (.146)	5.5 (.217)	13.9 (.547)	6.3 (.248)						
	5-6	3.5	1.25-M3	R1.25-3.5		3.7 (.146)	6.6 (.260)	14.4 (.567)	6.3 (.248)						
	5-6	3.5	1.25-L3.7			3.7 (.146)	8.0 (.315)	15.8 (.622)	7.0 (.276)						
	8	4	1.25-M4			4.3 (.169)	6.6 (.260)	14.4 (.567)	6.3 (.248)						
	8	4	1.25-4	R1.25-4		4.3 (.169)	8.0 (.315)	15.8 (.622)	7.0 (.276)						
	8	4	1.25-4NS			4.3 (.169)	9.0 (.354)	20.4 (.803)	11.1 (.437)						
	10	5	1.25-5	R1.25-5		5.3 (.209)	8.0 (.315)	15.8 (.622)	7.0 (.276)						
	10	5	1.25-5NS			5.3 (.209)	9.0 (.354)	20.4 (.803)	11.1 (.437)						
	10	5	1.25-L5			5.3 (.209)	11.6 (.457)	21.7 (.854)	11.1 (.437)						
	1/4	6	1.25-6			6.4 (.252)	11.6 (.457)	21.7 (.854)	11.1 (.437)						
	5/16	8	1.25-8			8.4 (.331)	11.6 (.457)	21.7 (.854)	11.1 (.437)						
	3/8	10	1.25-10			10.5 (.413)	13.6 (.535)	25.5(1.004)	13.9 (.547)						
	1/2	12	1.25-12			13.0 (.512)	19.0 (.748)	31.0(1.220)	16.7 (.657)						500
16 to 14 (1.04 to 2.63)	1-2	2	2-S2			2.2 (.087)	6.4 (.252)	12.3 (.484)	4.3 (.169)	4.8 (.189)	4.1 (.161)	2.3 (.091)	0.8 (.031)	YHT-2210 YA-1 YA-2 YA-4	1,000
	3-4	3	2-MS3			3.2 (.126)	5.5 (.217)	13.2 (.520)	5.6 (.220)						
	3-4	3	2-S3.3			3.2 (.126)	6.4 (.252)	12.3 (.484)	4.3 (.169)						
	3-4	3	2-M3.3			3.2 (.126)	6.6 (.260)	14.4 (.567)	6.3 (.248)						
	3-4	3	2-3			3.2 (.126)	8.5 (.335)	16.8 (.661)	7.8 (.307)						
	5-6	3.5	2-MS3.5			3.7 (.146)	5.5 (.217)	13.9 (.547)	6.3 (.248)						
	5-6	3.5	2-S3			3.7 (.146)	6.4 (.252)	12.3 (.484)	4.3 (.169)						
	5-6	3.5	2-M3	R2-3.5		3.7 (.146)	6.6 (.260)	14.4 (.567)	6.3 (.248)						
	5-6	3.5	2-P3.5			3.7 (.146)	7.0 (.276)	16.0 (.630)	7.7 (.303)						
	5-6	3.5	2-3.7			3.7 (.146)	8.5 (.335)	16.8 (.661)	7.8 (.307)						
	8	4	2-M4			4.3 (.169)	6.6 (.260)	14.4 (.567)	6.3 (.248)						
	8	4	2-P4			4.3 (.169)	7.0 (.276)	16.0 (.630)	7.7 (.303)						
	8	4	2-4	R2-4		4.3 (.169)	8.5 (.335)	16.8 (.661)	7.8 (.307)						
	8	4	2-4NS			4.3 (.169)	9.0 (.354)	20.3 (.799)	11.0 (.433)						
	10	5	2-M5			5.3 (.209)	8.5 (.335)	16.8 (.661)	7.8 (.307)						
	10	5	2-5NS			5.3 (.209)	9.0 (.354)	20.3 (.799)	11.0 (.433)						
	10	5	2-5	R2-5		5.3 (.209)	9.5 (.374)	16.8 (.661)	7.3 (.287)						
	1/4	6	2-6	R2-6		6.4 (.252)	12.0 (.472)	21.8 (.858)	11.0 (.433)						
	5/16	8	2-8	R2-8		8.4 (.331)	12.0 (.472)	21.8 (.858)	11.0 (.433)						

Note:1) Products with the JIS mark conform to JIS C2805.
2) The part numbers indicated in the above table are for products with a brazed seam.
When ordering products with a nominal size of 0.5 to 5.5 with a butted seam, add the prefix "WS" to the part number (ex.2-4 –>**WS2-4**).
3) Delivery lead times may vary depending on the product. Contact JST for details.

RING TONGUE (R type) Non-insulated

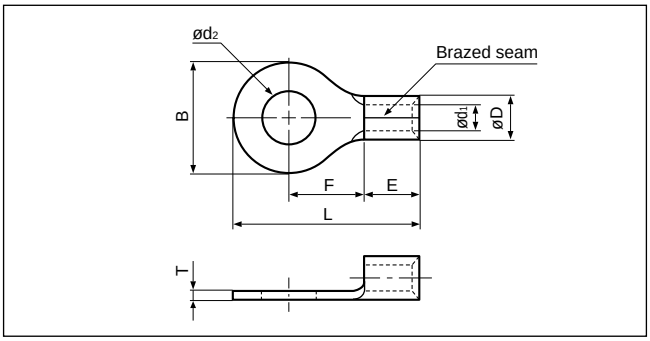

Applicable Wire AWG#(mm²)	Stud size		Part No.		Standard	Dimensions mm (in.)								Tool No.	Qty/box
	American	Metric	JST	JIS		ød2	B	L	**F**	E	øD	ød1	T		
16 to 14 (1.04 to 2.63)	3/8	10	2-10		UL SP	10.5 (.413)	13.6 (.535)	25.5(1.004)	13.9 (.547)	4.8 (.189)	4.1 (.161)	2.3 (.091)	0.8 (.031)	YHT-2210 YA-1 YA-2 YA-4	1,000
	1/2	12	2-12			13.0 (.512)	19.0 (.748)	31.0(1.220)	16.7 (.675)						500
	1/2	14	2-14			15.0 (.591)	27.0(1.063)	39.5(1.555)	21.2 (.835)						
	5/8	16	2-16			17.0 (.669)	27.0(1.063)	39.5(1.555)	21.2 (.835)						
	3/4	20	2-20			21.0 (.827)	27.0(1.063)	39.5(1.555)	21.2 (.835)						
14 to 12 (3.5)	3-4	3	3.5-R3		UL SP	3.2 (.126)	8.0 (.315)	17.8 (.707)	9.0 (.354)	4.8 (.189)	4.8 (.189)	2.7 (.106)	1.0 (.039)	YHT-2210 (Dies mark. 5)	1,000
	8	4	3.5-R4			4.3 (.169)	8.0 (.315)	17.8 (.707)	9.0 (.354)						
	8	4	3.5-4			4.3 (.169)	10.3 (.406)	18.6 (.732)	8.6 (.339)						
	10	5	3.5-R5			5.3 (.209)	8.0 (.315)	17.8 (.707)	9.0 (.354)						
	10	5	3.5-5			5.3 (.209)	10.3 (.406)	18.6 (.732)	8.6 (.339)						
	1/4	6	3.5-6			6.4 (.252)	10.3 (.406)	18.6 (.732)	8.6 (.339)						
12 to10 (2.63 to 6.64)	3-4	3	5.5-S3.3		UL SP	3.2 (.126)	7.2 (.283)	15.7 (.618)	5.9 (.232)	6.2 (.244)	5.6 (.220)	3.4 (.134)	1.0 (.039)	YHT-2210 YA-1 YA-2 YA-4	500
	3-4	3	5.5-3			3.2 (.126)	9.5 (.374)	19.8 (.780)	8.3 (.327)	6.8 (.268)					
	5-6	3.5	5.5-S3			3.7 (.146)	7.2 (.283)	15.7 (.618)	5.9 (.232)	6.2 (.244)					
	5-6	3.5	5.5-3.7			3.7 (.146)	9.5 (.374)	19.8 (.780)	8.3 (.327)	6.8 (.268)					
	8	4	5.5-S4			4.3 (.169)	7.2 (.283)	15.7 (.618)	5.9 (.232)	6.2 (.244)					
	8	4	5.5-4NS			4.3 (.169)	8.0 (.315)	19.1 (.752)	8.3 (.327)	6.8 (.268)					1,000
	8	4	5.5-4	R5.5-4	UL SP JIS	4.3 (.169)	9.5 (.374)	19.8 (.780)	8.3 (.327)						500
	10	5	5.5-5NS		UL SP	5.3 (.209)	8.0 (.315)	19.1 (.752)	8.3 (.327)						1,000
	10	5	5.5-5	R5.5-5	UL SP JIS	5.3 (.209)	9.5 (.374)	19.8 (.780)	8.3 (.327)						500
	10	5	5.5-S5		UL SP	5.3 (.209)	13.2 (.520)	22.4 (.882)	9.0 (.354)						
	1/4	6	5.5-6NS			6.4 (.252)	9.0 (.354)	24.3 (.957)	13.0 (.512)						1,000
	1/4	6	5.5-6	R5.5-6	UL SP JIS	6.4 (.252)	12.0 (.472)	25.8(1.016)	13.0 (.512)						500
	1/4	6	5.5-S6		UL SP	6.4 (.252)	13.2 (.520)	22.4 (.882)	9.0 (.354)						
	1/4	6	5.5-L6			6.4 (.252)	15.0 (.591)	28.0(1.102)	13.7 (.539)	6.8 (.268)					
	5/16	8	5.5-S8			8.4 (.331)	13.2 (.520)	22.4 (.882)	9.0 (.354)						
	5/16	8	5.5-8	R5.5-8	UL SP JIS	8.4 (.331)	15.0 (.591)	28.0(1.102)	13.7 (.539)						
	3/8	9	5.5-9		UL SP	9.8 (.386)	15.0 (.591)	28.0(1.102)	13.7 (.539)						
	3/8	10	5.5-10	R5.5-10	UL SP JIS	10.5 (.413)	15.0 (.591)	28.0(1.102)	13.7 (.539)						
	1/2	12	5.5-12		UL SP	13.0 (.512)	19.2 (.756)	32.4(1.276)	16.0 (.630)						
	1/2	14	5.5-14			15.0 (.591)	32.0(1.260)	48.1(1.894)	25.3 (.996)						200
	5/8	16	5.5-16			17.0 (.669)	32.0(1.260)	48.1(1.894)	25.3 (.996)						
	11/16	18	5.5-18			19.0 (.748)	32.0(1.260)	48.1(1.894)	25.3 (.996)						
	3/4	20	5.5-20			21.0 (.827)	32.0(1.260)	48.1(1.894)	25.3 (.996)						

Note:1) Products with the JIS mark (JIS) conform to JIS C2805.
2) The part numbers indicated in the above table are for products with a brazed seam.
When ordering products with a nominal size of 0.5 to 5.5 with a butted seam, add the prefix "WS" to the part number (ex.5.5-4 –>**WS5.5-4**).
3) Delivery lead times may vary depending on the product. Contact JST for details.

RING TONGUE (R type) Non-insulated



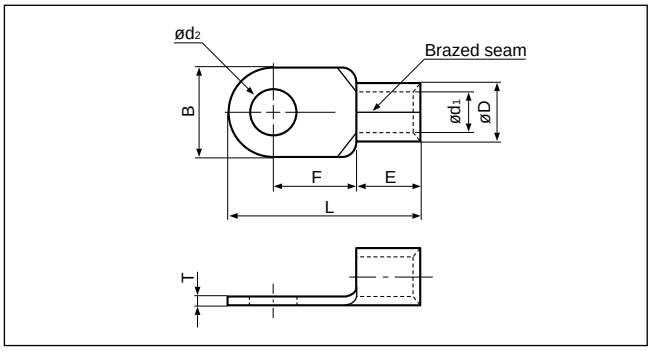

Applicable Wire AWG#(mm²)	Stud size		Part No.		Standard		Dimensions mm (in.)							Tool No.	Qty/box
	American	Metric	JST	JIS		ød2	B	L	F	E	øD	ød1	T		
8 (6.64 to 10.52)	8	4	8-NK4		UL SP	4.3 (.169)	9.0 (.354)	16.5 (.650)	5.8 (.228)	6.2 (.244)	7.1 (.280)	4.5 (.177)	1.2 (.047)	YA-4 YPT-60N YF-1 E-4 YET-60-1 (Note 2)	500
	8	4	8-4NS		UL SP	4.3 (.169)	8.0 (.315)	21.8 (.858)	9.3 (.366)	8.5 (.335)				YHT-8S YA-4, YA-5 YPT-60N YPT-150-1 YF-1 YET-60-1 E-4 YET-150-2 YET-60-1	1,000
	8	4	8-4		UL SP	4.3 (.169)	12.0 (.472)	23.8 (.937)	9.3 (.366)	8.5 (.335)					500
	10	5	8-NK5		UL SP	5.3 (.209)	9.0 (.354)	16.5 (.650)	5.8 (.228)	6.2 (.244)				YA-4 YPT-60N YF-1 E-4 YET-60-1 (Note 2)	
	10	5	8-5NS		UL SP	5.3 (.209)	9.0 (.354)	22.3 (.878)	9.3 (.366)	8.5 (.335)				YHT-8S YA-4 YA-5 YPT-60N YPT-150-1 YF-1 YET-60-1 E-4 YET-150-2 YET-60-1	1,000
	10	5	8-5	R8-5	UL SP JIS	5.3 (.209)	12.0 (.472)	23.8 (.937)	9.3 (.366)						500
	10	5	8-L5NS		UL SP	5.3 (.209)	9.0 (.354)	26.8(1.055)	13.8 (.543)						1,000
	10	5	8-L5			5.3 (.209)	15.0 (.591)	29.8(1.173)	13.8 (.543)						500
	1/4	6	8-6NS			6.4 (.252)	9.6 (.378)	22.6 (.890)	9.3 (.366)						1,000
	1/4	6	8-6	R8-6	UL SP JIS	6.4 (.252)	12.0 (.472)	23.8 (.937)	9.3 (.366)						500
	1/4	6	8-L6		UL SP	6.4 (.252)	15.0 (.591)	29.8(1.173)	13.8 (.543)						
	5/16	8	8-8NS			8.4 (.331)	11.5 (.453)	28.1(1.106)	13.8 (.543)						1,000
	5/16	8	8-8	R8-8	UL SP JIS	8.4 (.331)	15.0 (.591)	29.8(1.173)	13.8 (.543)						500
	3/8	10	8-10	R8-10	UL SP JIS	10.5 (.413)	15.0 (.591)	29.8(1.173)	13.8 (.543)						
	3/8	10	8-L10		UL SP	10.5 (.413)	20.0 (.787)	33.5(1.319)	15.0 (.591)						
	7/16	11	8-11			11.5 (.453)	20.0 (.787)	33.5(1.319)	15.0 (.591)						
	1/2	12	8-12			13.0 (.512)	20.0 (.787)	33.5(1.319)	15.0 (.591)						500
	1/2	14	8-14			15.0 (.591)	31.6(1.244)	50.0(1.969)	25.7(1.012)						
	5/8	16	8-16			17.0 (.669)	31.6(1.244)	50.0(1.969)	25.7(1.012)						200
	11/16	18	8-18			19.0 (.748)	31.6(1.244)	50.0(1.969)	25.7(1.012)						
	3/4	20	8-20			21.0 (.827)	31.6(1.244)	50.0(1.969)	25.7(1.012)						

Note:1) Products with the JIS mark (JIS) conform to JIS C2805.
2) Please use the die AD-901S for the pneumatic tool YA-4, and the die 8NK-6 for the hydraulic tools YPT-60N/YET-60-1.
3) Delivery lead times may vary depending on the product. Contact JST for details.

RING TONGUE (R type) Non-insulated

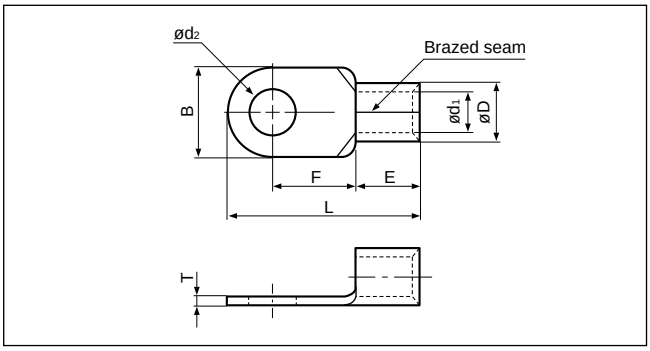

Applicable Wire AWG#(mm²)	Stud size		Part No.		Standard	Dimensions mm (in.)								Tool No.	Qty/box
	American	Metric	JST	JIS		ød2	B	L	F	E	øD	ød1	T		
6 (10.52 to 16.78)	8	4	14-4		UL SB	4.3 (.169)	12.0 (.472)	29.8(1.173)	13.3 (.524)	10.5 (.413)	9.0 (.354)	5.8 (.228)	1.5 (.059)	YA-4 YA-5 YPT-60N YPT-150-1 YF-1 YET-60-1 E-4 YET-150-2 YET-60-1	200
	8	4	14-NK4		UL SB	4.3 (.169)	12.2 (.480)	23.0 (.906)	7.7 (.303)	9.2 (.362)					
	10	5	14-5NS		UL SB	5.3 (.209)	9.0 (.354)	28.3(1.114)	13.3 (.524)	10.5 (.413)					100
	10	5	14-5	R14-5	UL SB JIS	5.3 (.209)	12.0 (.472)	29.8(1.173)	13.3 (.524)						
	10	5	14-NK5		UL SB	5.3 (.209)	12.2 (.480)	23.0 (.906)	7.7 (.303)	9.2 (.362)					200
	1/4	6	14-6NS		UL SB	6.4 (.252)	9.6 (.378)	28.6(1.126)	13.3 (.524)	10.5 (.413)					100
	1/4	6	14-6	R14-6	UL SB JIS	6.4 (.252)	12.0 (.472)	29.8(1.173)	13.3 (.524)						200
	1/4	6	14-L6		UL SB	6.4 (.252)	16.0 (.630)	32.8(1.291)	14.5 (.571)						
	5/16	8	14-8NS		UL SB	8.4 (.331)	11.5 (.453)	30.8(1.213)	14.5 (.571)						100
	5/16	8	14-S8		UL SB	8.4 (.331)	12.0 (.472)	31.0(1.220)	14.5 (.571)						
	5/16	8	14-8	R14-8	UL SB JIS	8.4 (.331)	16.0 (.630)	32.8(1.291)	14.5 (.571)						
	3/8	9	14-9		UL SB	9.8 (.386)	16.0 (.630)	32.8(1.291)	14.5 (.571)						
	3/8	10	14-10	R14-10	UL SB JIS	10.5 (.413)	16.0 (.630)	32.8(1.291)	14.5 (.571)						
	3/8	10	14-L10		UL SB	10.5 (.413)	22.0 (.866)	41.0(1.614)	19.5 (.739)						
	7/16	11	14-11		UL SB	11.5 (.453)	22.0 (.866)	41.0(1.614)	19.5 (.739)						
	1/2	12	14-12	R14-12	UL SB JIS	13.0 (.512)	22.0 (.866)	41.0(1.614)	19.5 (.739)						
	1/2	14	14-14	R14-14	UL SB JIS	15.0 (.591)	30.0(1.181)	49.0(1.929)	23.5 (.925)						
	5/8	16	14-16		UL SB	17.0 (.669)	31.6(1.244)	51.5(2.028)	25.2 (.992)						
	11/16	18	14-18		UL SB	19.0 (.748)	31.6(1.244)	51.5(2.028)	25.2 (.992)						
	3/4	20	14-20		UL SB	21.0 (.827)	31.6(1.244)	51.5(2.028)	25.2 (.992)						
4 (16.78 to 26.66)	10	5	22-5NS		UL SB	5.3 (.209)	9.5 (.374)	28.7(1.130)	12.0 (.472)	12.0 (.472)	11.5 (.453)	7.7 (.303)	1.8 (.071)	YA-5 YPT-60N YPT-150-1 YF-1 YET-60-1 E-4 YET-150-2 YET-60-1	100
	10	5	22-S5		UL SB	5.3 (.209)	12.0 (.472)	30.0(1.181)	12.0 (.472)						
	10	5	22-5		UL SB	5.3 (.209)	16.5 (.650)	33.7(1.327)	13.5 (.531)						
	1/4	6	22-S6		UL SB	6.4 (.252)	12.0 (.472)	30.0(1.181)	12.0 (.472)						
	1/4	6	22-6	R22-6	UL SB JIS	6.4 (.252)	16.5 (.650)	33.7(1.327)	13.5 (.531)						
	5/16	8	22-S8		UL SB	8.4 (.331)	12.0 (.427)	30.0(1.181)	12.0 (.472)						
	5/16	8	22-8	R22-8	UL SB JIS	8.4 (.331)	16.5 (.650)	33.7(1.327)	13.5 (.531)						
	3/8	9	22-9		UL SB	9.8 (.386)	17.5 (.689)	36.7(1.445)	16.0 (.630)						
	3/8	10	22-S10		UL SB	10.5 (.413)	16.5 (.650)	33.7(1.327)	13.5 (.531)						
	3/8	10	22-10	R22-10	UL SB JIS	10.5 (.413)	17.5 (.689)	36.7(1.445)	16.0 (.630)						
	7/16	11	22-11		UL SB	11.5 (.453)	22.0 (.866)	42.5(1.673)	19.5 (.768)						
	1/2	12	22-12	R22-12	UL SB JIS	13.0 (.512)	22.0 (.866)	42.5(1.673)	19.5 (.768)						
	1/2	14		R22-14		15.0 (.591)	30.0(1.181)	51.5(2.038)	24.5 (.965)						
	5/8	16	22-16		UL SB	17.0 (.669)	30.0(1.181)	51.5(2.028)	24.5 (.965)						
	11/16	18	22-18		UL SB	19.0 (.748)	30.0(1.181)	51.5(2.028)	24.5 (.965)						
	3/4	20	22-20		UL SB	21.0 (.827)	30.0(1.181)	51.5(2.028)	24.5 (.965)						

Note:1) Products with the JIS mark (JIS) conform to JIS C2805.
2) Delivery lead times may vary depending on the product. Contact JST for details.

RING TONGUE (R type) *Non-insulated*



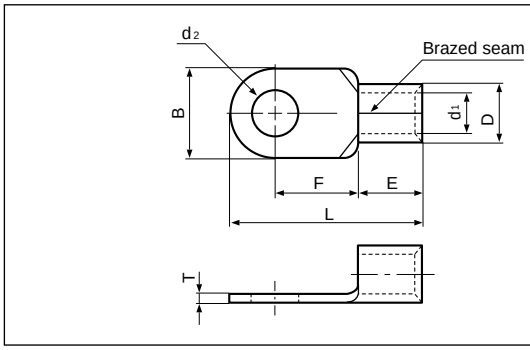

Applicable Wire AWG#(mm²)	Stud size		Part No.		Standard	Dimensions mm (in.)								Tool No.	Qty/box
	American	Metric	JST	JIS		ød2	B	L	F	E	øD	ød1	T		
2 (26.66 to 42.42)	10	5	38-S5		UL CSA	5.3 (.209)	15.5 (.610)	38.0 (1.496)	16.0 (.630)	14.0 (.551)	13.3 (.524)	9.4 (.370)	1.8 (.071)	YA-5 YPT-60N YPT-150-1 YF-1 YET-60-1 E-4 YET-150-2	100
	10	5	38-5			5.3 (.209)	22.0 (.866)	42.7(1.681)	17.7 (.697)						
	1/4	6	38-S6			6.4 (.252)	15.5 (.610)	38.0 (1.496)	16.0 (.630)						
	1/4	6	38-6			6.4 (.252)	22.0 (.866)	42.7(1.681)	17.7 (.697)						
	5/16	8	38-S8			8.4 (.331)	15.5 (.610)	38.0 (1.496)	16.0 (.630)						
	5/16	8	38-8	R38-8	UL CSA JIS	8.4 (.331)	22.0 (.866)	42.7(1.681)	17.7 (.697)						
	5/16	8	38-L8		UL CSA	8.4 (.331)	30.0(1.181)	52.5 (2.067)	23.5 (.925)						
	3/8	9	38-9			9.8 (.386)	22.0 (.866)	42.7 (1.681)	17.7 (.697)						
	3/8	10	38-S10			10.5 (.413)	15.5 (.610)	38.0 (1.496)	16.0 (.630)						
	3/8	10	38-10	R38-10	UL CSA JIS	10.5 (.413)	22.0 (.866)	42.7(1.681)	17.7 (.697)						
	3/8	10	38-L10		UL CSA	10.5 (.413)	30.0(1.181)	52.5(2.067)	23.5 (.925)						
	7/16	11	38-11			11.5 (.453)	22.0 (.866)	42.7(1.681)	17.7 (.697)						
	1/2	12	38-12	R38-12	UL CSA JIS	13.0 (.512)	22.0 (.866)	42.7(1.681)	17.7 (.697)						
	1/2	14	38-14	R38-14		15.0 (.591)	30.0(1.181)	52.5 (2.067)	23.5 (.925)						
	5/8	16	38-16		UL CSA	17.0 (.669)	30.0(1.181)	52.5 (2.067)	23.5 (.925)						
	11/16	18	38-18			19.0 (.748)	30.0(1.181)	52.5(2.067)	23.5 (.925)						
	3/4	20	38-20			21.0 (.827)	30.0(1.181)	52.5(2.067)	23.5 (.925)						
1/0 (42.42 to 60.57)	1/4	6	60-S6		UL	6.4 (.252)	16.0 (.630)	46.7(1.839)	20.7 (.815)	18.0 (.709)	15.5 (.610)	11.4 (.449)	2.0 (.079)	YA-5 YPT-60N YPT-150-1 YF-1 YET-60-1 E-4 YET-150-2 YF-1 YET-300-1 E-4 YET-300N	50
	1/4	6	60-6		UL CSA	6.4 (.252)	22.0 (.866)	49.7(1.957)	20.7 (.815)						
	5/16	8	60-S8			8.4 (.331)	16.0 (.630)	46.7(1.839)	20.7 (.815)						
	5/16	8	60-8	R60-8	UL CSA JIS	8.4 (.331)	22.0 (.866)	49.7(1.957)	20.7 (.815)						
	3/8	9	60-9		UL CSA	9.8 (.386)	22.0 (.866)	49.7(1.957)	20.7 (.815)						
	3/8	10	60-S10			10.5 (.413)	16.0 (.630)	46.7(1.839)	20.7 (.815)						
	3/8	10	60-10	R60-10	UL CSA JIS	10.5 (.413)	22.0 (.866)	49.7(1.957)	20.7 (.815)						
	7/16	11	60-11		UL CSA	11.5 (.453)	22.0 (.866)	49.7(1.957)	20.7 (.815)						
	1/2	12	60-12	R60-12	UL CSA JIS	13.0 (.512)	22.0 (.866)	49.7(1.957)	20.7 (.815)						
	1/2	14	60-14	R60-14		15.0 (.591)	32.0(1.260)	57.5(2.264)	23.5 (.925)						
	5/8	16	60-16		UL CSA	17.0 (.669)	32.0(1.260)	57.5(2.264)	23.5 (.925)						
	11/16	18	60-18			19.0 (.748)	32.0(1.260)	57.5(2.264)	23.5 (.925)						
	3/4	20	60-20			21.0 (.827)	32.0(1.260)	57.5(2.264)	23.5 (.925)						
	7/8	22	60-22			23.0 (.906)	32.0(1.260)	57.5(2.264)	23.5 (.925)						
2/0 (60.57 to 76.28)	1/4	6	70-6		UL CSA	6.4 (.252)	24.0 (.945)	51.0(2.008)	20.0 (.787)	19.0 (.748)	17.5 (.689)	13.3 (.524)	2.0 (.079)	YPT-150-1 YF-1 E-4 YET-150-2 YF-1 E-4 YET-300-1 YET-300N	25
	5/16	8	70-8			8.4 (.331)	24.0 (.945)	51.0(2.008)	20.0 (.787)						
	3/8	9	70-9			9.8 (.386)	24.0 (.945)	51.0(2.008)	20.0 (.787)						
	3/8	10	70-10			10.5 (.413)	24.0 (.945)	51.0(2.008)	20.0 (.787)						
	7/16	11	70-11			11.5 (.453)	24.0 (.945)	51.0(2.008)	20.0 (.787)						
	1/2	12	70-12			13.0 (.512)	24.0 (.945)	51.0(2.008)	20.0 (.787)						
	1/2	14	70-14			15.0 (.591)	32.0(1.260)	61.0(2.402)	26.0(1.024)						
	5/8	16	70-16			17.0 (.669)	32.0(1.260)	61.0(2.402)	26.0(1.024)						
	11/16	18	70-18			19.0 (.748)	32.0(1.260)	61.0(2.402)	26.0(1.024)						
	3/4	20	70-20			21.0 (.827)	32.0(1.260)	61.0(2.402)	26.0(1.024)						
	7/8	22	70-22			23.0 (.906)	32.0(1.260)	61.0(2.402)	26.0(1.024)						

Note:1) Products with the JIS mark (JIS) conform to JIS C2805.
2) Part numbers containing "S0" do not have stud holes.
3) Delivery lead times may vary depending on the product. Contact JST for details.

RING TONGUE (R type) Non-insulated

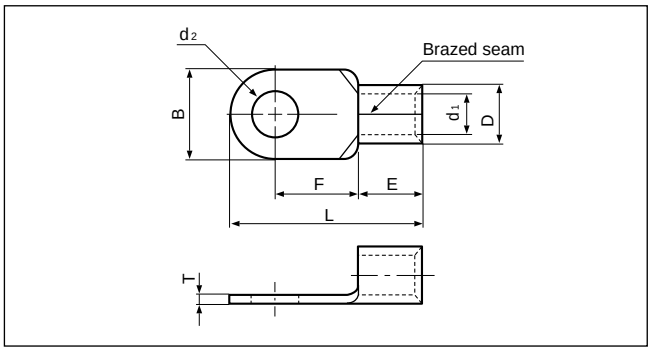

Applicable Wire AWG#(mm²)	Stud size		Part No.		Standard	Dimensions mm (in.)								Tool No.	Qty/box
	American	Metric	JST	JIS		ød2	B	L	F	E	øD	ød1	T		
3/0 (76.28 to 96.3)	1/4	6	80-6		UL SP	6.4 (.252)	27.0 (1.063)	54.2 (2.134)	20.7 (.815)	20.0 (.787)	19.5 (.768)	14.5 (.571)	2.3 (.091)	YPT-150-1 YF-1 E-4 YET-150-2 YF-1 E-4 YET-300-1 YET-300N	25
	5/16	8	80-8			8.4 (.331)	27.0 (1.063)	54.2 (2.134)	20.7 (.815)						
	5/16	8	80-L8			8.4 (.331)	32.0 (1.260)	68.0 (2.677)	32.0 (1.260)						
	3/8	10	80-10			10.5 (.413)	27.0 (1.063)	54.2 (2.134)	20.7 (.815)						
	3/8	10	80-L10			10.5 (.413)	32.0 (1.260)	68.0 (2.677)	32.0 (1.260)						
	7/16	11	80-11			11.5 (.453)	27.0 (1.063)	54.2 (2.134)	20.7 (.815)						
	1/2	12	80-12			13.0 (.512)	27.0 (1.063)	54.2 (2.134)	20.7 (.815)						
	1/2	12	80-L12			13.0 (.512)	32.0 (1.260)	68.0 (2.677)	32.0 (1.260)						
	1/2	14	80-14			15.0 (.591)	32.0 (1.260)	68.0 (2.677)	32.0 (1.260)						
	5/8	16	80-16			17.0 (.669)	32.0 (1.260)	68.0 (2.677)	32.0 (1.260)						
	11/16	18	80-18			19.0 (.748)	32.0 (1.260)	68.0 (2.677)	32.0 (1.260)						
	3/4	20	80-20			21.0 (.827)	32.0 (1.260)	68.0 (2.677)	32.0 (1.260)						
4/0 (96.3 to 117.2)	1/4	6	100-6		UL SP	6.4 (.252)	28.5 (1.122)	55.6 (2.189)	20.4 (.803)	21.0 (.827)	22.3 (.878)	16.4 (.646)	2.6 (.102)	YPT-150-1 YF-1 E-4 YET-150-2 YF-1 E-4 YET-300-1 YET-300N	25
	5/16	8	100-8			8.4 (.331)	28.5 (1.122)	55.6 (2.189)	20.4 (.803)						
	5/16	8	100-L8			8.4 (.331)	32.0 (1.260)	69.0 (2.717)	32.0 (1.260)						
	3/8	9	100-9			9.8 (.386)	28.5 (1.122)	55.6 (2.189)	20.4 (.803)						
	3/8	10	100-10	R100-10	UL SP JIS	10.5 (.413)	28.5 (1.122)	55.6 (2.189)	20.4 (.803)						
	3/8	10	100-L10		UL SP	10.5 (.413)	32.0 (1.260)	69.0 (2.717)	32.0 (1.260)						
	1/2	12	100-12	R100-12	UL SP JIS	13.0 (.512)	28.5 (1.122)	55.6 (2.189)	20.4 (.803)						
	1/2	12	100-L12		UL SP	13.0 (.512)	32.0 (1.260)	69.0 (2.717)	32.0 (1.260)						
	1/2	14	100-14	R100-14	UL SP JIS	15.0 (.591)	32.0 (1.260)	69.0 (2.717)	32.0 (1.260)						
	5/8	16	100-16	R100-16		17.0 (.669)	32.0 (1.260)	69.0 (2.717)	32.0 (1.260)						
	7/8	22	100-22		UL SP	23.0 (.906)	32.0 (1.260)	69.0 (2.717)	32.0 (1.260)						

Note: 1) Products with the JIS mark (JIS) conform to JIS C2805.
2) Part numbers containing "S0" or "L0" do not have stud holes.

RING TONGUE (R type) Non-insulated



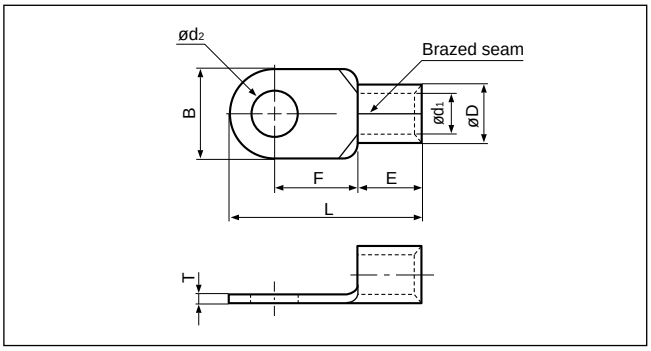

Applicable Wire AWG#(mm²)	Stud size		Part No.	Standard	Dimensions mm (in.)								Tool No.	Qty/box
	American	Metric			ød2	B	L	F	E	øD	ød1	T		
250/300 (117.2 to 152.05)	–	–	150-L0		–	36.0(1.417)	81.0(3.189)	36.0(1.417)	27.0 (1.063)	26.5 (1.043)	19.5 (.768)	3.2 (.126)	YPT-150-1 YF-1 E-4 YET-150-2 YF-1 E-4 YET-300-1 YET-300N	20
	1/4	6	150-6		6.4 (.252)	36.0(1.417)	66.0(2.600)	23.0 (.906)						
	5/16	8	150-8		8.4 (.331)	36.0(1.417)	66.0(2.600)	23.0 (.906)						
	5/16	8	150-L8		8.4 (.331)	36.0(1.417)	81.0(3.189)	36.0(1.417)						
	3/8	10	R150-10		10.5 (.413)	36.0(1.417)	66.0(2.600)	21.0 (.827)						
	3/8	10	150-10		10.5 (.413)	36.0(1.417)	66.0(2.600)	23.0 (.906)						
	3/8	10	150-L10		10.5 (.413)	36.0(1.417)	81.0(3.189)	36.0(1.417)						
	7/16	11	150-11		11.5 (.453)	36.0(1.417)	66.0(2.600)	23.0 (.906)						
	1/2	12	R150-12		13.0 (.512)	36.0(1.417)	66.0(2.600)	21.0 (.827)						
	1/2	12	150-12		13.0 (.512)	36.0(1.417)	66.0(2.600)	23.0 (.906)						
	1/2	12	150-L12		13.0 (.512)	36.0(1.417)	81.0(3.189)	36.0(1.417)						
	1/2	14	R150-14		15.0 (.591)	36.0(1.417)	68.0(2.677)	23.0 (.906)						
	5/8	16	150-16		17.0 (.669)	36.0(1.417)	66.0(2.600)	23.0 (.906)						
	5/8	16	R150-16		17.0 (.669)	36.0(1.417)	68.0(2.677)	23.0 (.906)						
	5/8	16	150-L16		17.0 (.669)	36.0(1.417)	81.0(3.189)	36.0(1.417)						
	11/16	18	R150-18		19.0 (.748)	36.0(1.417)	81.0(3.189)	36.0(1.417)						
	3/4	20	R150-20		21.0 (.827)	36.0(1.417)	81.0(3.189)	36.0(1.417)						
	7/8	22	150-22		23.0 (.906)	36.0(1.417)	81.0(3.189)	36.0(1.417)						
	15/16	24	150-24		25.0 (.984)	36.0(1.417)	81.0(3.189)	36.0(1.417)						
	1	27	150-27		28.0(1.102)	36.0(1.417)	81.0(3.189)	36.0(1.417)						
350 (152.05 to 192.60)	5/16	8	180-8		8.4 (.331)	38.5(1.516)	69.0(2.717)	24.5 (.965)	28.5 (1.122)	28.5 (1.122)	21.0 (.827)	3.5 (.138)	YF-1 E-4 YET-300-1 YET-300N	20
	3/8	10	180-10		10.5 (.413)	38.5(1.516)	69.0(2.717)	24.5 (.965)						
	3/8	10	180-L10		10.5 (.413)	38.5(1.516)	86.8(3.417)	39.0(1.535)						
	1/2	12	180-12		13.0 (.512)	38.5(1.516)	69.0(2.717)	24.5 (.965)						
	1/2	12	180-L12		13.0 (.512)	38.5(1.516)	86.8(3.417)	39.0(1.535)						
	1/2	14	180-14		15.0 (.591)	38.5(1.516)	69.0(2.717)	24.5 (.965)						
	5/8	16	180-L16		17.0 (.669)	38.5(1.516)	86.8(3.417)	39.0(1.535)						
	5/8	16	180-16		17.0 (.669)	38.5(1.516)	69.0(2.717)	24.5 (.965)						
	3/4	20	180-20		21.0 (.827)	38.5(1.516)	86.8(3.417)	39.0(1.535)						

Note:1) Products with the JIS mark Ⓙ conform to JIS C2805.
2) Part numbers containing "S0" or "L0" do not have stud holes.
3) Delivery lead times may vary depending on the product. Contact JST for details.

RING TONGUE (R type) Non-insulated

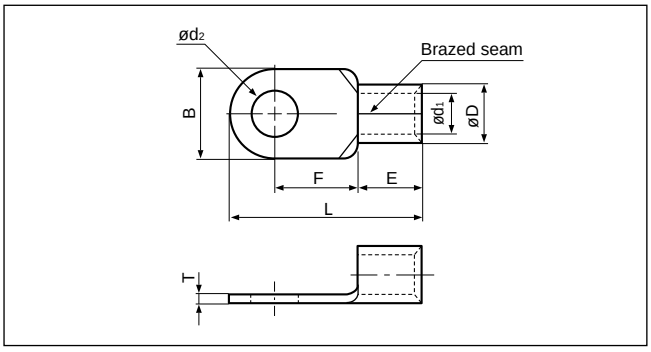

Applicable Wire AWG#(mm²)	Stud size		Part No.	Standard	Dimensions mm (in.)								Tool No.	Qty/box
	American	Metric			ød2	B	L	F	E	øD	ød1	T		
400 (192.60 to 242.27)	–	–	200-L0		–	44.0(1.732)	91.0(3.583)	37.5(1.476)	31.5 (1.240)	32.7 (1.287)	24.0 (.945)	4.0 (.157)	YF-1 E-4 YET-300-1 YET-300N	10
	12/16	8	200-8		8.4 (.331)	44.0(1.732)	72.0(2.835)	24.5 (.965)						
	5/16	8	200-L8		8.4 (.331)	44.0(1.732)	72.0(2.835)	24.5 (.965)						
	3/8	10	200-10	UL SP	10.5 (.413)	44.0(1.732)	72.0(2.835)	24.5 (.965)						
	3/8	10	200-L10		10.5 (.413)	44.0(1.732)	91.0(3.583)	37.5(1.476						
	7/16	11	200-11		11.5 (.453)	44.0(1.732)	72.0(2.835)	24.5 (.965)						
	1/2	12	200-12		13.0 (.512)	44.0(1.732)	72.0(2.835)	24.5 (.965)						
	1/2	12	R200-12	UL SP JIS	13.0 (.512)	44.0(1.732)	78.0(3.071)	24.5 (.965)						
	1/2	12	200-L12	UL SP	13.0 (.512)	44.0(1.732)	91.0(3.583)	37.5(1.476)						
	1/2	14	200-14		15.0 (.591)	44.0(1.732	72.0(2.835)	24.5 (.965)						
	1/2	14	R200-14	UL SP JIS	15.0 (.591)	44.0(1.732)	78.0(3.071)	24.5 (.965)						
	5/8	16	200-16	UL SP	17.0 (.669)	44.0(1.732)	72.0(2.835)	24.5 (.965)						
	5/8	16	R200-16	UL SP JIS	17.0 (.669)	44.0(1.732)	78.0(3.071)	24.5 (.965)						
	5/8	16	200-L16	UL SP	17.0 (.669)	44.0(1.732)	91.0(3.583)	37.5(1.476)						
	11/16	18	R200-18		19.0 (.748)	44.0(1.732)	91.0(3.583)	37.5(1.476)						
	3/4	20	R200-20		21.0 (.827)	44.0(1.732)	91.0(3.583)	37.5(1.476)						
	7/8	22	R200-22	UL SP JIS	23.0 (.906)	44.0(1.732)	91.0(3.583)	37.5(1.476)						
	15/16	24	R200-24		25.0 (.984)	44.0(1.732)	91.0(3.583)	37.5(1.476)						
	1	27	R200-27		28.0(1.102)	44.0(1.732)	91.0(3.583)	37.5(1.476)						
N.A. (250)	1/2	12	250-12		13.0 (.512)	44.0(1.732)	78.0(3.071)	24.5 (.965)	31.5 (1.240)	35.6 (1.402)	26.0 (1.024)	4.5 (.177)	YF-1 E-4 YET-300-1	
	1/2	14	250-14		15.0 (.591)									
	5/8	16	250-16		17.0 (.669)									
600/650 (242.27 to 325)	–	–	325-L0		–	50.5(1.988)	105.7(4.161)	45.0(1.772)	35.5 (1.398)	37.6 (1.480)	28.0 (1.102)	4.5 (.177)	YF-1 E-4 YET-300-1 YET-300N	5
	12/16	8	325-8		8.4 (.331)	50.5(1.988)	88.0(3.465)	33.5(1.319)						
	5/16	8	325-L8		8.4 (.331)	50.5(1.988)	105.7(4.161)	45.0(1.772)						
	3/8	10	325-10		10.5 (.413)	50.5(1.988)	88.0(3.465)	33.5(1.319)						
	3/8	10	325-L10	UL SP	10.5 (.413)	50.5(1.988)	105.7(4.161)	45.0(1.772)						
	7/16	11	325-11		11.5 (.453)	50.5(1.988)	88.0(3.465)	33.5(1.319)						
	1/2	12	325-12		13.0 (.512)	50.5(1.988)	88.0(3.465)	33.5(1.319)						
	1/2	12	325-L12		13.0 (.512)	50.5(1.988)	105.7(4.161)	45.0(1.772)						
	1/2	14	325-14		15.0 (.591)	50.5(1.988)	88.0(3.465)	33.5(1.319)						
	5/8	16	325-16		17.0 (.669)	50.5(1.988)	88.0(3.465)	33.5(1.319)						
	5/8	16	R325-16	UL SP JIS	17.0 (.669)	50.5(1.988)	94.2(3.709)	33.5(1.319)						
	5/8	16	325-L16	UL SP	17.0 (.669)	50.5(1.988)	105.7(4.161)	45.0(1.772)						
	11/16	18	325-M18		19.0 (.748)	50.5(1.988)	94.2(3.709)	33.5(1.319)						
	11/16	18	R325-18		19.0 (.748)	50.5(1.988)	105.7(4.161)	45.0(1.772)						
	3/4	20	R325-20		21.0 (.827)	50.5(1.988)	105.7(4.161)	45.0(1.772)						
	7/8	22	R325-22	UL SP JIS	23.0 (.906)	50.5(1.988)	105.7(4.161)	45.0(1.772)						
	15/16	24	R325-24		25.0 (.984)	50.5(1.988)	105.7(4.161)	45.0(1.772)						
	1	27	R325-27		28.0(1.102)	50.5(1.988)	105.7(4.161)	45.0(1.772)						

Note:1) Products with the JIS mark JIS conform to JIS C2805.
2) Part numbers containing "S0" or "L0" do not have stud holes.
3) Delivery lead times may vary depending on the product. Contact JST for details.