Power Feed Through Filters **F.LL.DH-F.LL.DU** series

Single line - high performance

This wide range of feed-through filters provide excellent RFI attenuation up to GHz frequency levels. They are an economical alternative to dedicated filter units, where multiple input or output power lines require suppression. Particularly suitable for use in screened rooms, high frequency welding equipment, power supplies and telecom systems. Due to the high capacitance values of these filters, protective measures (e.g. protective earthing) in accordance with equipment / system regulations are required.



- Current ratings from 16A to 300A
- Excellent attenuation up-to 1GHz
- Wide choice of performance options
- Rugged resin sealed construction
- Lock-nut or flange-mounting

Mechanical Specifications

Manufacture: metal case sealed with plastic cover; mounted with rectangular flange (F.LL.DH) or metric nut M32 (F.LL.DU).

Connections: threaded bar with metric nut M6 (up to 63A), M8 (100A), M10 (200A), M12 (300A);
Note: on screwing the cable to the filter, the lock nut must be held in position to avoid a torque to the threaded bar inside the filter.

Electrical Specifications

Rated voltage (V_R): see table

Rated current (I_R): referred to room temperature = 40°C

Voltage test ($2_{S.}$): see table

Climatic category: GPC (40/085/56);
Temperature range: -40°C to +85°C

Filter Range - F.LL.

(example pt no. - F.LL.DH.016A.025.I0)

Code	I_R (A)	V_R ac (50/60Hz)/ dc	Ref-Std VDE0565-1-A C(uF)	Class	Volt test (Vdc)	Dimensions (mm) A	B	Typical loaded insertion loss (dB) MHz 0.01	0.1	1	10	100	1000
DH.016A.025.I0	16	250 / 440	2x0.1	Y	2700	57.5	140	-	-	35	90	>100	>100
▲DH.025A.025.I0	25	250 / 440	2x0.1	Y	2700	57.5	140	-	-	35	90	>100	>100
DH.040A.025.I0	40	250 / 440	2x0.1	Y	2700	57.5	140	-	-	35	90	>100	>100
DH.100A.025.I0	100	250 / 440	2x0.1	Y	2700	77.5	180	-	-	20	90	>100	>100
▲DU.040A.026.I0	40	440 / 750	2x1	X2	2500	39.5	166	15	27	65	>100	>100	>100
▲DU.100A.026.I0	100	440 / 750	2x1	X2	2500	46.5	180	15	27	65	>100	>100	>100
▲DU.200A.026.I0	200	440 / 750	2x1	X2	2500	49.5	185	15	27	65	>100	>100	>100
▲DU.300A.026.I0	300	440 / 750	2x1	X2	2500	68.0	215	15	27	65	>100	>100	>100
DU.040A.225.I0	40	250 / 440	2x1.1	Y	2700	39.5	166	15	27	65	>100	>100	>100
DU.100A.225.I0	100	250 / 440	2x1.1	Y	2700	46.5	180	15	27	65	>100	>100	>100
DU.200A.225.I0	200	250 / 440	2x1.1	Y	2700	49.5	185	15	27	65	>100	>100	>100
DU.300A.225.I0	300	250 / 440	2x1.1	Y	2700	68.0	215	15	27	65	>100	>100	>100
DU.040A.445.I0	40	250 / 440	2x2.2	X2	1500	39.5	166	18	32	68	>100	>100	>100
DU.100A.445.I0	100	250 / 440	2x2.2	X2	1500	46.5	180	18	32	68	>100	>100	>100
DU.200A.445.I0	200	250 / 440	2x2.2	X2	1500	49.0	185	18	32	68	>100	>100	>100
DU.300A.445.I0	300	250 / 440	2x2.2	X2	1500	68.0	215	18	32	68	>100	>100	>100
DU.040A.945.I0	40	250 / 350	2x4.7	X2	1075	39.5	166	28	42	90	>100	>100	>100
DU.100A.945.I0	100	250 / 350	2x4.7	X2	1075	46.5	180	28	42	90	>100	>100	>100
DU.200A.945.I0	200	250 / 350	2x4.7	X2	1075	49.0	185	28	42	90	>100	>100	>100
DU.300A.945.I0	300	250 / 350	2x4.7	X2	1075	68.0	215	28	42	90	>100	>100	>100

Approvals 1283 ▲ Where indicated

Dimensions (mm) and connections

F.LL.DH

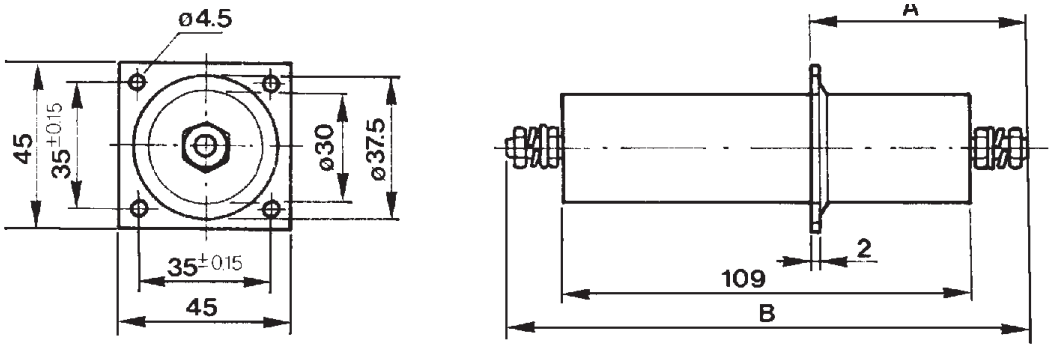

F.LL.DU

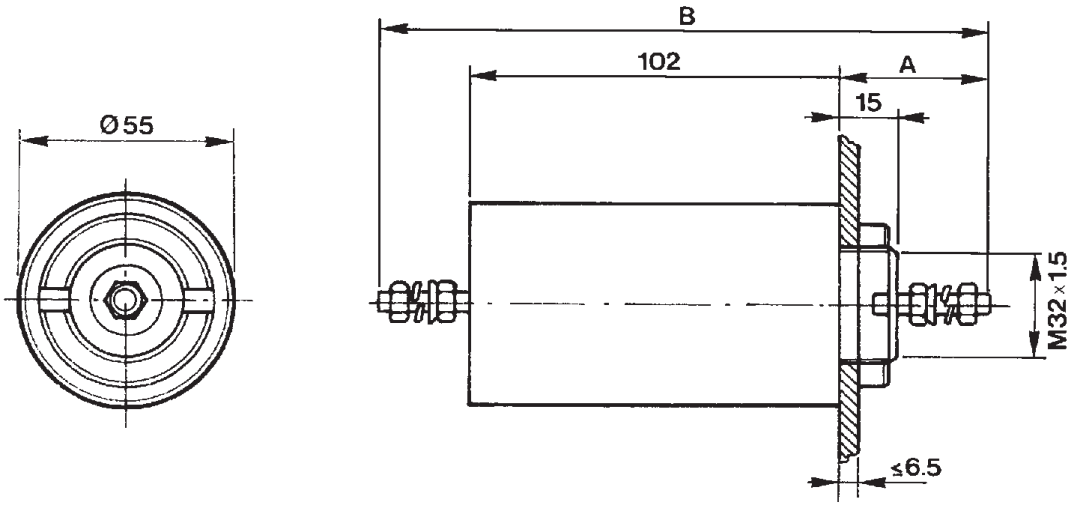

Circuit diagram (Pi configuration)

