PMR209 Series Metallized Impregnated Paper, Class X2, 250 VAC

Overview

The PMR209 Series is constructed of multilayer metallized paper encapsulated and impregnated in self-extinguishing material meeting the requirements of UL 94 V–0.

Applications

Typical applications include worldwide use in contact protection, contact interference suppression and transient suppression.

Benefits

- Approvals: ENEC, UL, cUL
- Rated voltage: 250 VAC 50/60 Hz
- Capacitance range: 0.047 – 0.47 µF
- Capacitance tolerance: ±20%
- Resistance range: 22 – 470 Ω
- Resistance tolerance: ±30%
- Lead spacing: 15.2 – 25.4 mm
- Climatic category: 40/085/56/B, IEC 60068–1
- Tape and reel packaging in accordance with IEC 60286–2
- RoHS Compliant and lead-free terminations
- Operating temperature range of -40˚C to +85˚C
- Excellent self-healing properties which ensure long life even when subjected to frequent over voltages
- Good resistance to ionization due to impregnated paper dielectric
- High dV/dt capability
- Impregnated paper ensures excellent stability and reliability properties, particularly in applications with continuous operation



Legacy Part Number System

PMR209	M	B	5470	M	047	R30
Series	Rated Voltage (VAC)	Lead Spacing (mm)	Capacitance Code (pF)	Capacitance Tolerance	Resistance (Ω)	Packaging
RC Snubber, Metallized Paper	M = 250	B = 15.2 C = 20.3 E = 25.4	The last three digits represent significant figures. The first digit specifies the total number of digits.	M = ±20%	Resistance Value in Ω	See Ordering Options Table

New KEMET Part Number System

P	409	Q	M	473	M	250	A	H470
Capacitor Class	Series	Lead Spacing (mm)	Size Code	Capacitance Code (pF)	Capacitance Tolerance	Rated Voltage (VAC)	Packaging	Resistance (Ω)
P= Metallized Paper	RC Snubber	Q = 15.2 C = 20.3 E = 25.4	See Dimension Table	First two digits represent significant figures. Third digit specifies number of zeros.	M = ±20%	250 = 250	See Ordering Options Table	H plus first two digits represent significant figures. Third digit specifies number of zeros.

© KEMET Electronics Corporation • P.O. Box 5928 • Greenville, SC 29606 (864) 963-6300 • www.kemet.com

Ordering Options Table

Lead Spacing Nominal (mm)	Type of Leads and Packaging	Lead Length (mm)	KEMET Lead and Packaging Code	Legacy Lead and Packaging Code
15.2	**Standard Lead and Packaging Options**			
	Bulk (Bag) – Short Leads	6 +0/-1	C	R06
	Bulk (Bag) – Max Length Leads	30 +5/-0	A	R30
	Tape & Reel (Standard Reel)	H_0= 18.5 +/-0.5	L	R19T0
	Other Lead and Packaging Options			
	Tape & Reel (Large Reel)	H_0= 18.5 +/-0.5	P	R19T1
20.3	**Standard Lead and Packaging Options**			
	Bulk (Tray) – Short Leads	6 +0/-1	C	R06
	Bulk (Bag) – Max Length Leads	30 +5/-0	A	R30
	Tape & Reel (Standard Reel)	H_0= 18.5 +/-0.5	L	R19T0
	Other Lead and Packaging Options			
	Tape & Reel (Large Reel)	H_0= 18.5 +/-0.5	P	R19T1
25.4	**Standard Lead and Packaging Options**			
	Bulk (Bag) – Short Leads	6 +0/-1	C	R06
	Bulk (Tray) – Max Length Leads	30 +5/-0	A	R30

Dimensions – Millimeters

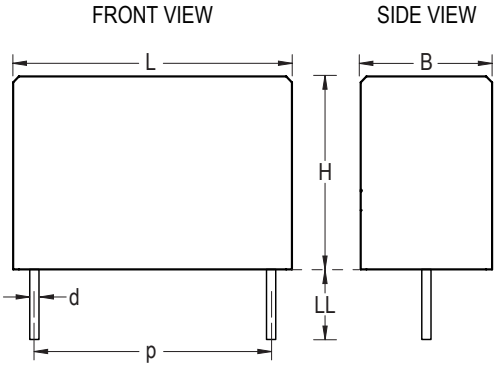

Size Code	p		B		H		L		d	
	Nominal	Tolerance	Nominal	Tolerance	Nominal	Tolerance	Nominal	Tolerance	Nominal	Tolerance
QM	15.2	+/-0.4	7.3	Maximum	13.0	Maximum	18.5	Maximum	0.8	+/-0.05
CE	20.3	+/-0.4	7.6	Maximum	14.0	Maximum	24.0	Maximum	0.8	+/-0.05
CP	20.3	+/-0.4	11.3	Maximum	16.5	Maximum	24.0	Maximum	0.8	+/-0.05
EJ	25.4	+/-0.4	12.1	Maximum	19.0	Maximum	30.5	Maximum	1.0	+/-0.05
EL	25.4	+/-0.4	15.3	Maximum	22.0	Maximum	30.5	Maximum	1.0	+/-0.05

Note: See Ordering Options Table for lead length (LL) options.

Performance Characteristics

Rated Voltage	250 VAC 50/60 Hz	
Capacitance Range	0.047 – 0.47 µF	
Capacitance Tolerance	±20%	
Resistance Range	22 – 470 Ω	
Resistance Tolerance	±30%	
Temperature Range	-40°C to +85°C	
Climatic Category	40/085/56/B	
Approvals	ENEC, UL, cUL	
Peak Pulse Voltage	1,000 V	
Series Resistance	The series resistance is defined at 1 kHz for RC ≥ 50 µs and at 100 kHz for RC < 50 µs	
Insulation Resistance	Minimum Values Between Terminals	
	C ≤ 0.33 µF	≥ 3,000 MΩ
	C > 0.33 µF	≥ 1,000 MΩ • µF
Pulse Current	Maximum 12 A repetitive. Maximum 20 A peak for occasional transients.	
Test Voltage Between Terminals	The 100% screening factory test is carried out at 1,800 VDC. The voltage level is selected to meet the requirements in applicable equipment standards. All electrical characteristics are checked after the test.	
In DC Applications	Recommended voltage ≤ 630 VDC	
Power Ratings	The average losses may reach 0.5 W provided the surface temperature does not exceed + 85°C. For maximum permitted power dissipation vs. temperature, see Derating Curves.	
Derating Curves	Maximum Allowable Power Dissipation vs. Ambient Temperature and Case Sizes.	

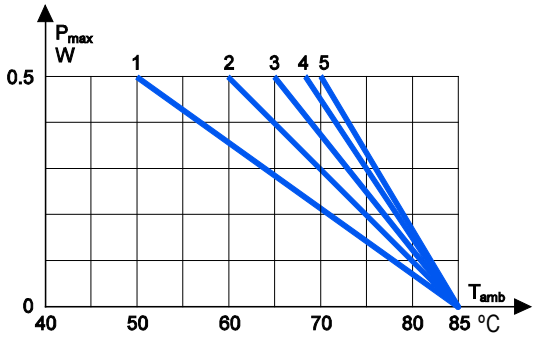

Curve	Dimension B (mm)
1	7.3
2	7.6
3	11.3
4	15.3

Environmental Test Data

Test	IEC Publication	Procedure
Endurance	IEC 60384-14	1.25 x V_R VAC 50 Hz, once every hour increased to 1,000 VAC for 0.1 second, 1,000 hours at upper rated temperature.
Vibration	IEC 60068–2–6 Test Fc	3 directions at 2 hours each, 10 – 500 Hz at 0.75 mm or 98 m/s^2
Bump	IEC 60068–2–29 Test Eb	4,000 bumps at 390 m/s^2
Change of Temperature	IEC 60068-2-14 Test Na	Upper and lower rated temperature 5 cycles
Active Flammability	IEC 60384–14	V_R + 20 surge pulses at 2.5 kV (pulse every 5 seconds)
Passive Flammability	IEC 60384–14	IEC 60384–1, IEC 60695–11–5 Needle-flame test
Damp Heat Steady State	IEC 60068–2–78 Test Cab	+40°C and 93% RH, 56 days

Approvals

Certification Body	Mark	Specification	File Number
Intertek Semko AB		EN/IEC 60384-14	SE/0140–28C
UL		UL 60384-14 CAN/ CSA-E60384-14-09	E73869

Environmental Compliance

All KEMET EMI capacitors are RoHS Compliant.

Table 1 – Ratings & Part Number Reference

Lead Spacing (p)	Capacitance Value (µF)	Resistance (Ω)	Maximum Dimensions in mm			New KEMET Part Number	Legacy Part Number
			B	H	L		
15.2	0.047	47	7.3	13	18.5	P409QM473M250(1)H470	PMR209MB5470M047(1)
15.2	0.047	100	7.3	13	18.5	P409QM473M250(1)H101	PMR209MB5470M100(1)
20.3	0.1	22	7.6	14	24	P409CE104M250(1)H220	PMR209MC6100M022(1)
20.3	0.1	33	7.6	14	24	P409CE104M250(1)H330	PMR209MC6100M033(1)
20.3	0.1	47	7.6	14	24	P409CE104M250(1)H470	PMR209MC6100M047(1)
20.3	0.1	68	7.6	14	24	P409CE104M250(1)H680	PMR209MC6100M068(1)
20.3	0.1	100	7.6	14	24	P409CE104M250(1)H101	PMR209MC6100M100(1)
20.3	0.1	150	11.3	16.5	24	P409CP104M250(1)H151	PMR209MC6100M150(1)
20.3	0.1	220	11.3	16.5	24	P409CP104M250(1)H221	PMR209MC6100M220(1)
20.3	0.1	330	11.3	16.5	24	P409CP104M250(1)H331	PMR209MC6100M330(1)
20.3	0.1	470	11.3	16.5	24	P409CP104M250(1)H471	PMR209MC6100M470(1)
20.3	0.22	22	11.3	16.5	24	P409CP224M250(1)H220	PMR209MC6220M022(1)
20.3	0.22	33	11.3	16.5	24	P409CP224M250(1)H330	PMR209MC6220M033(1)
20.3	0.22	47	11.3	16.5	24	P409CP224M250(1)H470	PMR209MC6220M047(1)
20.3	0.22	68	11.3	16.5	24	P409CP224M250(1)H680	PMR209MC6220M068(1)
20.3	0.22	100	11.3	16.5	24	P409CP224M250(1)H101	PMR209MC6220M100(1)
20.3	0.22	150	11.3	16.5	24	P409CP224M250(1)H151	PMR209MC6220M150(1)
20.3	0.22	220	11.3	16.5	24	P409CP224M250(1)H221	PMR209MC6220M220(1)
25.4	0.22	330	12.1	19	30.5	P409EJ224M250(1)H331	PMR209ME6220M330(1)
25.4	0.22	470	15.3	22	30.5	P409EL224M250(1)H471	PMR209ME6220M470(1)
25.4	0.47	33	15.3	22	30.5	P409EL474M250(1)H330	PMR209ME6470M033(1)
25.4	0.47	47	15.3	22	30.5	P409EL474M250(1)H470	PMR209ME6470M047(1)
25.4	0.47	68	15.3	22	30.5	P409EL474M250(1)H680	PMR209ME6470M068(1)
25.4	0.47	100	15.3	22	30.5	P409EL474M250(1)H101	PMR209ME6470M100(1)
25.4	0.47	150	15.3	22	30.5	P409EL474M250(1)H151	PMR209ME6470M150(1)
25.4	0.47	220	15.3	22	30.5	P409EL474M250(1)H221	PMR209ME6470M220(1)
Lead Spacing (p)	**Capacitance Value (µF)**	**Resistance Ω**	**B (mm)**	**H (mm)**	**L (mm)**	**New KEMET Part Number**	**Legacy Part Number**

(1) Insert lead and packaging code. See Ordering Options Table for available options.

Soldering Process

The implementation of the RoHS directive has resulted in the selection of SnAgCu (SAC) alloys or SnCu alloys as primary solder. This has increased the liquidus temperature from that of 183ºC for SnPb eutectic alloy to 217 – 221ºC for the new alloys. As a result, the heat stress to the components, even in wave soldering, has increased considerably due to higher pre-heat and wave temperatures. Polypropylene capacitors are especially sensitive to heat (the melting point of polypropylene is 160 – 170ºC). Wave soldering can be destructive, especially for mechanically small polypropylene capacitors (with lead spacing of 5 mm to 15 mm), and great care has to be taken during soldering. The recommended solder profiles from KEMET should be used. Please consult KEMET with any questions. In general, the wave soldering curve from IEC Publication 61760-1 Edition 2 serves as a solid guideline for successful soldering. Please see Figure 1.

Reflow soldering is not recommended for through-hole film capacitors. Exposing capacitors to a soldering profile in excess of the above the recommended limits may result to degradation or permanent damage to the capacitors.

Do not place the polypropylene capacitor through an adhesive curing oven to cure resin for surface mount components. Insert through-hole parts after the curing of surface mount parts. Consult KEMET to discuss the actual temperature profile in the oven, if through-hole components must pass through the adhesive curing process. A maximum two soldering cycles is recommended. Please allow time for the capacitor surface temperature to return to a normal temperature before the second soldering cycle.

Manual Soldering Recommendations

Following is the recommendation for manual soldering with a soldering iron.

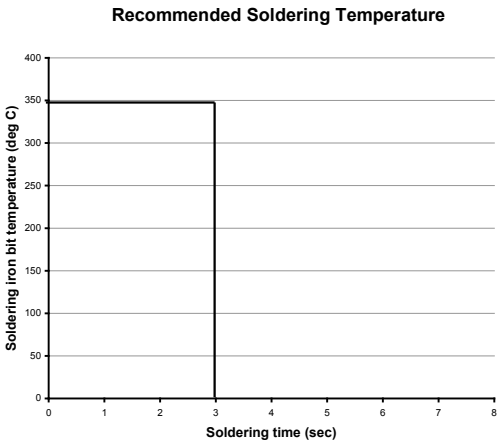

The soldering iron tip temperature should be set at 350°C (+10°C maximum) with the soldering duration not to exceed more than 3 seconds.

Wave Soldering Recommendations

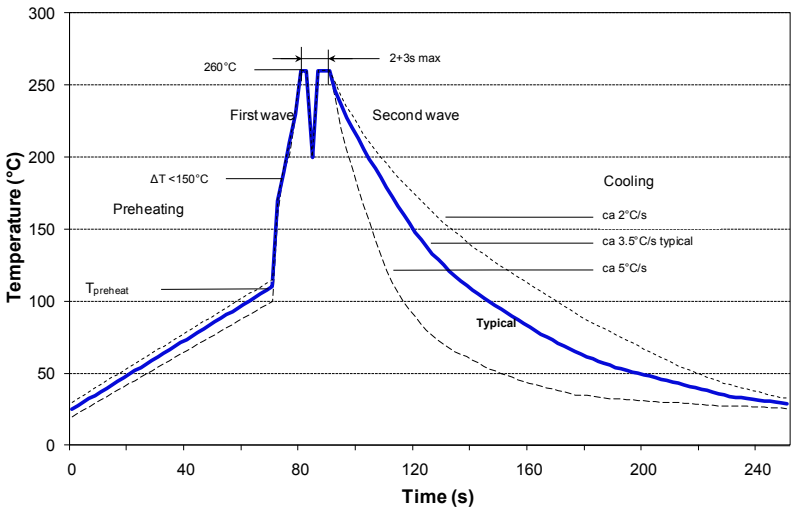

Soldering Process cont'd

Wave Soldering Recommendations cont'd

1. The table indicates the maximum set-up temperature of the soldering process
Figure 1

Dielectric Film Material	Maximum Preheat Temperature			Maximum Peak Soldering Temperature	
	Capacitor Pitch ≤ 10 mm	Capacitor Pitch = 15 mm	Capacitor Pitch > 15 mm	Capacitor Pitch ≤ 15 mm	Capacitor Pitch > 15 mm
Polyester	130°C	130°C	130°C	270°C	270°C
Polypropylene	100°C	110°C	130°C	260°C	270°C
Paper	130°C	130°C	140°C	270°C	270°C
Polyphenylene Sulphide	150°C	150°C	160°C	270°C	270°C

2. The maximum temperature measured inside the capacitor:
Set the temperature so that inside the element the maximum temperature is below the limit:

Dielectric Film Material	Maximum temperature measured inside the element
Polyester	160°C
Polypropylene	110°C
Paper	160°C
Polyphenylene sulphide	160°C

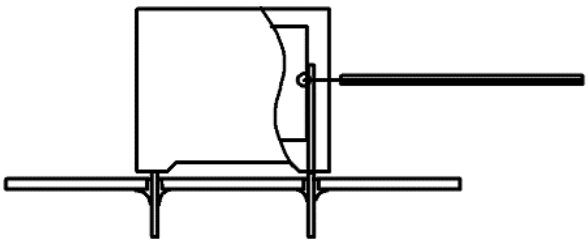

Temperature monitored inside the capacitor.

Selective Soldering Recommendations

Selective dip soldering is a variation of reflow soldering. In this method, the printed circuit board with through-hole components to be soldered is preheated and transported over the solder bath as in normal flow soldering without touching the solder. When the board is over the bath, it is stopped and pre-designed solder pots are lifted from the bath with molten solder only at the places of the selected components, and pressed against the lower surface of the board to solder the components.

The temperature profile for selective soldering is similar to the double wave flow soldering outlined in this document, **however, instead of two baths, there is only one bath with a time from 3 to 10 seconds.** In selective soldering, the risk of overheating is greater than in double wave flow soldering, and great care must be taken so that the parts are not overheated.

Construction

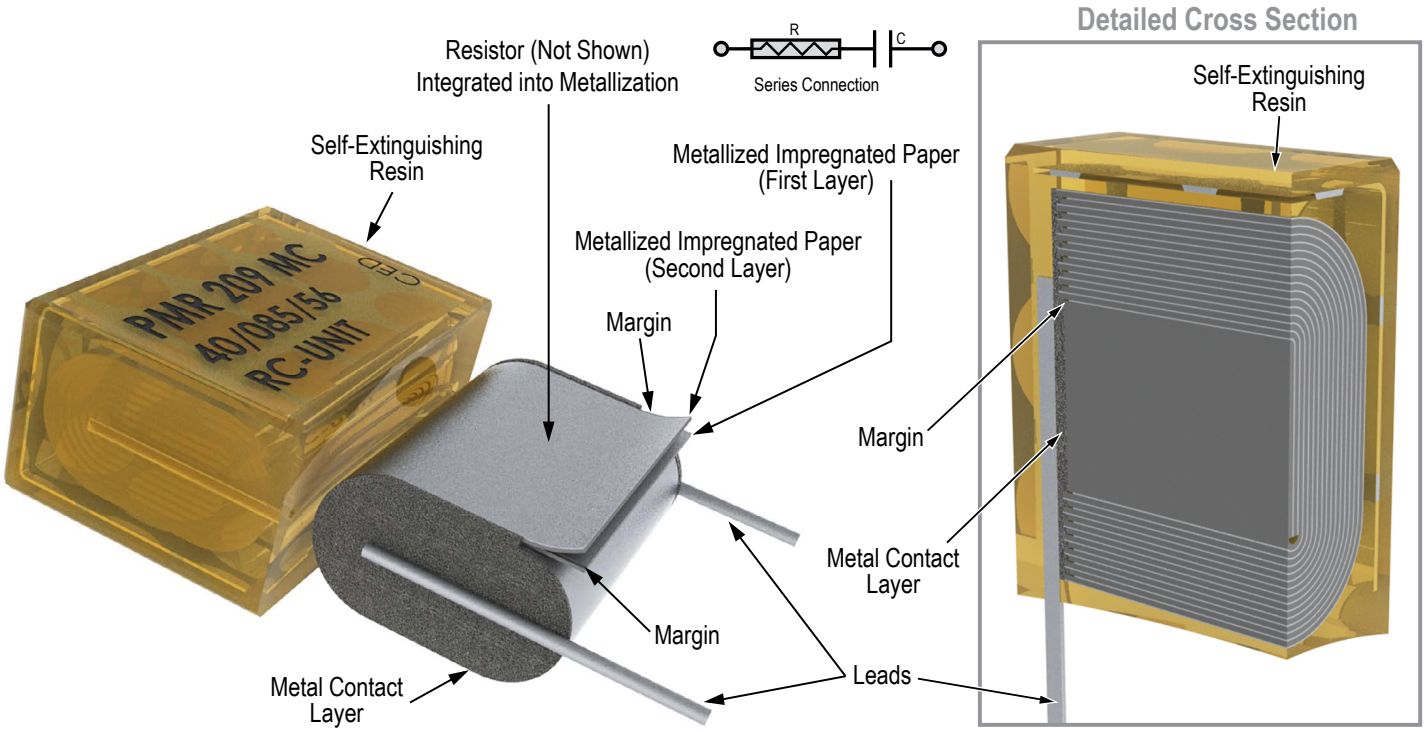

Winding Scheme

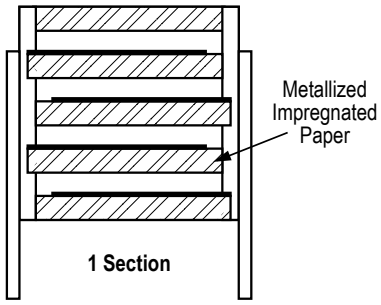

Marking

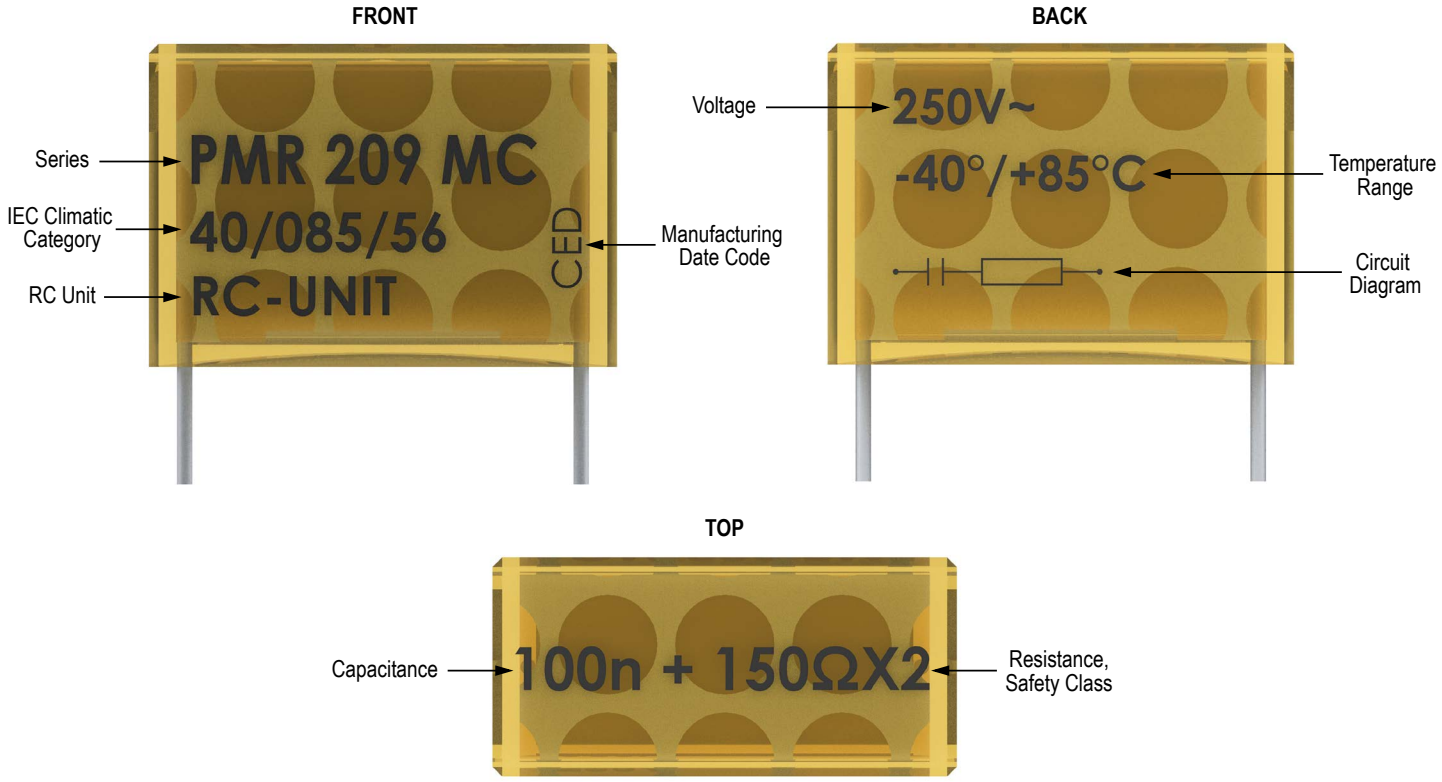

Packaging Quantities

Size Code	Lead Spacing (mm)	Thickness (mm)	Height (mm)	Length (mm)	Bulk Short Leads	Bulk Long Leads	Standard Reel ø 360 mm
QM	15.2	7.3	13.0	18.5	500	100	600
CE	20.3	7.6	14.0	24.0	250	1500	250
CP	20.3	11.3	16.5	24.0	150	1000	180
EJ	25.4	12.1	19.0	30.5	100	800	
EL	25.4	15.3	22.0	30.5	75	600	

Lead Taping & Packaging (IEC 60286–2)

Lead Spacing 10.2 – 15.2 mm

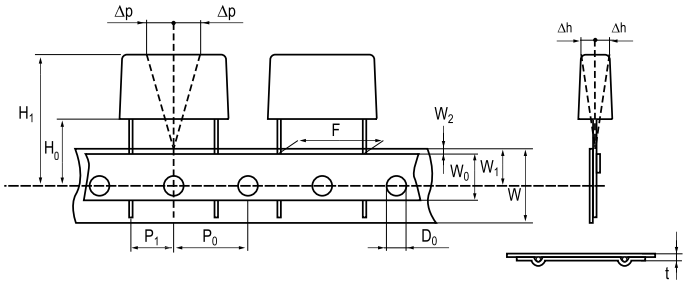

Lead Spacing 20.3 – 22.5 mm

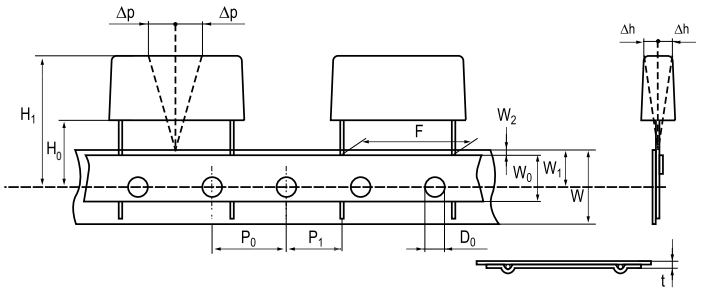

Formed Leads from 10.2 to 7.5 mm

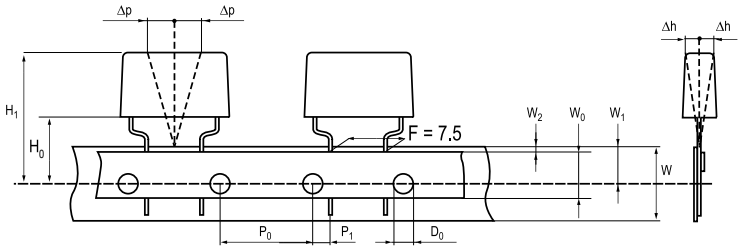

Taping Specification

Dimensions in mm								Standard IEC 60286–2
Lead spacing	+6/-0.1	F	Formed 7.5	10.2	15.2	20.3	22.5	F
Carrier tape width	+/-0.5	W	18	18	18	18	18	$18^{+1/-0.5}$
Hold-down tape width	+/-0.3	W_0	9	12	12	12	12	
Position of sprocket hole	+/-0.5	W_1	9	9	9	9	9	$9^{+0.75/-0.5}$
Distance between tapes	Maximum	W_2	3	3	3	3	3	3
Sprocket hole diameter	+/-0.2	D_0	4	4	4	4	4	4
Feed hole lead spacing	+/-0.3	P_0 (1)	12.7(4)	12.7	12.7	12.7	12.7	12.7
Distance lead – feed hole	+/-0.7	P_1	3.75	7.6	5.1	8.9	5.3	P1
Deviation tape – plane	Maximum	Δp	1.3	1.3	1.3	1.3	1.3	1.3
Lateral deviation	Maximum	Δh	2	2	2	2	2	2
Total thickness	+/-0.2	t	0.7	0.7	0.7	0.7	0.9^{MAX}	0.9^{MAX}
Sprocket hole/cap body	Nominal	H_0 (2)	$18^{+2/-0}$	$18^{+2/-0}$	$18^{+2/-0}$	$18^{+2/-0}$	$18.5^{+/-0.5}$	$18^{+2/-0}$
Sprocket hole/top of cap body	Maximum	H_1 (3)	35	35	35	35	58	58^{MAX}

(1) Maximum cumulative feed hole error, 1 mm per 20 parts.
(2) 16.5 mm available on request.
(3) Depending on case size.
(4) 15 mm available on request.

Lead Taping & Packaging (IEC 60286–2) cont'd

Ammo Specifications

Series	Dimensions (mm)		
	H	W	T
R4x, R4x+R, R7x, RSB	360	340	59
F5A, F5B, F5D			
F6xx, F8xx			
PHExxx, PMExxx, PMRxxx	330	330	50

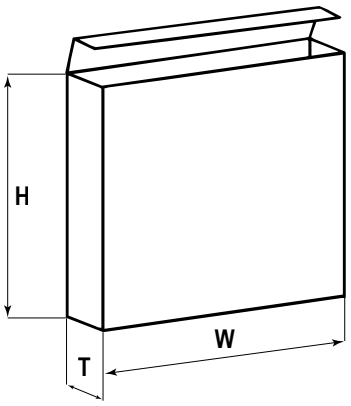

Reel Specifications

Series	Dimensions (mm)		
	D	H	W
R4x, R4x+R, R7x, RSB	355 500	30 25	55 (Max)
F5A, F5B, F5D			
F6xx, F8xx			
PHExxx, PMExxx, PMRxxx	360 500	30	46 (Max)

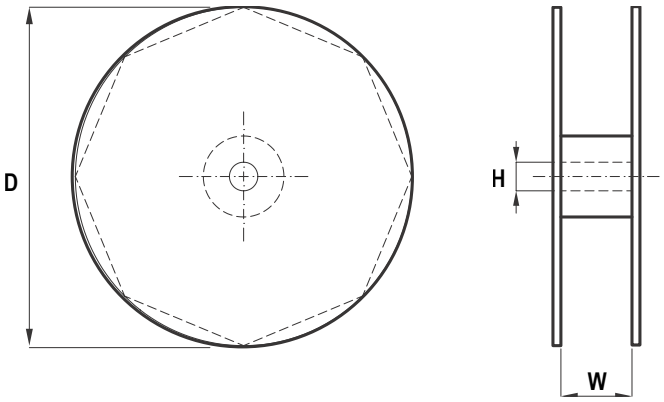

Manufacturing Date Code (IEC–60062)

Y = Year, Z = Month			
Year	Code	Month	Code
2000	M	January	1
2001	N	February	2
2002	P	March	3
2003	R	April	4
2004	S	May	5
2005	T	June	6
2006	U	July	7
2007	V	August	8
2008	W	September	9
2009	X	October	O
2010	A	November	N
2011	B	December	D
2012	C		
2013	D		
2014	E		
2015	F		
2016	H		
2017	J		
2018	K		
2019	L		
2020	M		

KEMET Corporation World Headquarters

2835 KEMET Way
Simpsonville, SC 29681

Mailing Address:
P.O. Box 5928
Greenville, SC 29606

www.kemet.com
Tel: 864-963-6300
Fax: 864-963-6521

Corporate Offices
Fort Lauderdale, FL
Tel: 954-766-2800

North America

Southeast
Lake Mary, FL
Tel: 407-855-8886

Northeast
Wilmington, MA
Tel: 978-658-1663

Central
Novi, MI
Tel: 248-306-9353

West
Milpitas, CA
Tel: 408-433-9950

Mexico
Guadalajara, Jalisco
Tel: 52-33-3123-2141

Europe

Southern Europe
Sasso Marconi, Italy
Tel: 39-051-939111

Skopje, Macedonia
Tel: 389-2-55-14-623

Central Europe
Landsberg, Germany
Tel: 49-8191-3350800

Kamen, Germany
Tel: 49-2307-438110

Northern Europe
Harlow, United Kingdom
Tel: 44-1279-460122

Espoo, Finland
Tel: 358-9-5406-5000

Asia

Northeast Asia
Hong Kong
Tel: 852-2305-1168

Shenzhen, China
Tel: 86-755-2518-1306

Beijing, China
Tel: 86-10-5877-1075

Shanghai, China
Tel: 86-21-6447-0707

Seoul, South Korea
Tel: 82-2-6294-0550

Taipei, Taiwan
Tel: 886-2-27528585

Southeast Asia
Singapore
Tel: 65-6701-8033

Penang, Malaysia
Tel: 60-4-6430200

Bangalore, India
Tel: 91-806-53-76817

Note: KEMET reserves the right to modify minor details of internal and external construction at any time in the interest of product improvement. KEMET does not assume any responsibility for infringement that might result from the use of KEMET Capacitors in potential circuit designs. KEMET is a registered trademark of KEMET Electronics Corporation.

Disclaimer

All product specifications, statements, information and data (collectively, the "Information") in this datasheet are subject to change. The customer is responsible for checking and verifying the extent to which the Information contained in this publication is applicable to an order at the time the order is placed.

All Information given herein is believed to be accurate and reliable, but it is presented without guarantee, warranty, or responsibility of any kind, expressed or implied.

Statements of suitability for certain applications are based on KEMET Electronics Corporation's ("KEMET") knowledge of typical operating conditions for such applications, but are not intended to constitute – and KEMET specifically disclaims – any warranty concerning suitability for a specific customer application or use. The Information is intended for use only by customers who have the requisite experience and capability to determine the correct products for their application. Any technical advice inferred from this Information or otherwise provided by KEMET with reference to the use of KEMET's products is given gratis, and KEMET assumes no obligation or liability for the advice given or results obtained.

Although KEMET designs and manufactures its products to the most stringent quality and safety standards, given the current state of the art, isolated component failures may still occur. Accordingly, customer applications which require a high degree of reliability or safety should employ suitable designs or other safeguards (such as installation of protective circuitry or redundancies) in order to ensure that the failure of an electrical component does not result in a risk of personal injury or property damage.

Although all product–related warnings, cautions and notes must be observed, the customer should not assume that all safety measures are indicted or that other measures may not be required.