AC Line EMI Suppression and RC Networks

PMR205, Metallized Impregnated Paper, 125 VAC/250 VDC

Overview

Multilayer metallized paper encapsulated and impregnated in self-extinguishing material that meets the requirements of UL 94 V–0.

Applications

For worldwide use in contact protection, contact interference suppression, and transient suppression.

Benefits

- Rated voltage: 250 VDC, 125 VAC 50/60 Hz
- Capacitance range: 0.1 – 1.0 µF
- Capacitance tolerance: ±20%
- Resistance range: 22 – 680 Ω
- Resistance tolerance: ±30%
- Lead Spacing: 15.2 – 25.4 mm
- Climatic category: 40/085/56/B, IEC 60068–1
- Tape & Reel packaging in accordance with IEC 60286–2
- RoHS compliance and lead-free terminations
- Operating temperature range of −40°C to +85°C

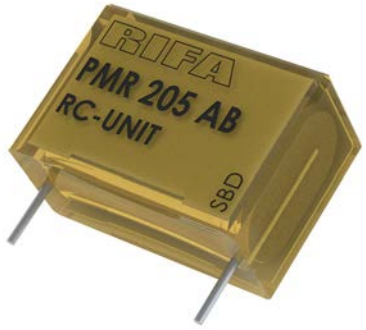

Legacy Part Number System

PMR205	A	B	6100	M	033	R30
Series	Rated Voltage (VAC)	Lead Spacing (mm)	Capacitance Code (pF)	Capacitance Tolerance	Resistance (Ω)	Packaging
RC Snubber, Metallized Paper	A = 125	B = 15.2 C = 20.3 E = 25.4	The last three digits represent significant figures. The first digit specifies the total number of digits.	M = ±20%	Resistance Value in Ω	See Ordering Options Table

KEMET Part Number System

P	405	Q	E	104	M	125	A	H330
Capacitor Class	Series	Lead Spacing (mm)	Size Code	Capacitance Code (pF)	Capacitance Tolerance	Rated Voltage (VAC)	Packaging	Resistance (Ω)
P = Metallized Paper	RC Snubber	Q = 15.2 C = 20.3 E = 25.4	See Dimension Table	First two digits represent significant figures. Third digit specifies number of zeros.	M = ±20%	125 = 125	See Ordering Options Table	H plus first two digits represent significant figures. Third digit specifies number of zeros.

© KEMET Electronics Corporation • One East Broward Boulevard
Fort Lauderdale, FL 33301 USA • 954-766-2800 • www.kemet.com

Benefits cont.

- Excellent self-healing properties that ensure long life, even when subjected to frequent over-voltages
- Good resistance to ionization due to impregnated paper dielectric
- High dv/dt capability
- Impregnated paper that ensures excellent stability and reliability properties, particularly in applications with continuous operation

Ordering Options Table

Lead Spacing Nominal (mm)	Type of Leads and Packaging	Lead Length (mm)	KEMET Lead and Packaging Code	Legacy Lead and Packaging Code
15.2	**Standard Lead and Packaging Options**			
	Bulk (Bag) – Short Leads	6 +0/–1	C	R06
	Bulk (Bag) – Maximum Length Leads	30 +5/–0	A	R30
	Tape & Reel (Standard Reel Φ = 360 mm)	H_0 = 18.5 ±0.5	L	R19T0
20.3	**Standard Lead and Packaging Options**			
	Bulk (Tray) – Short Leads	6 +0/–1	C	R06
	Bulk (Bag) – Maximum Length Leads	30 +5/–0	A	R30
	Tape & Reel (Standard Reel Φ = 360 mm)	H_0 = 18.5 ±0.5	L	R19T0
25.4	**Standard Lead and Packaging Options**			
	Bulk (Bag) – Short Leads	6 +0/–1	C	R06
	Bulk (Tray) – Maximumn Length Leads	30 +5/–0	A	R30

Dimensions – Millimeters

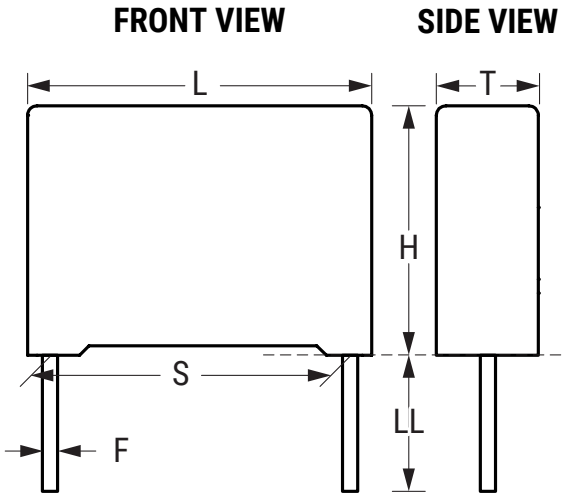

Size Code	S		T		H		L		F	
	Nominal	Tolerance	Nominal	Tolerance	Nominal	Tolerance	Nominal	Tolerance	Nominal	Tolerance
QE	15.2	±0.4	5.2	Maximum	10.5	Maximum	18.5	Maximum	0.8	±0.05
QM	15.2	±0.4	7.3	Maximum	13.0	Maximum	18.5	Maximum	0.8	±0.05
QP	15.2	±0.4	7.8	Maximum	13.5	Maximum	18.5	Maximum	0.8	±0.05
CE	20.3	±0.4	7.6	Maximum	14.0	Maximum	24.0	Maximum	0.8	±0.05
CJ	20.3	±0.4	9.0	Maximum	15.0	Maximum	24.0	Maximum	0.8	±0.05
CP	20.3	±0.4	11.3	Maximum	16.5	Maximum	24.0	Maximum	0.8	±0.05
EE	25.4	±0.4	10.6	Maximum	16.1	Maximum	30.5	Maximum	1.0	±0.05

Note: See the Ordering Options Table for lead length (LL) options.

Performance Characteristics

Rated Voltage	125 VAC 50/60 Hz	
Capacitance Range	0.1 – 1.0 µF	
Capacitance Tolerance	±20%	
Resistance Range	22 – 680 Ω	
Resistance Tolerance	±30%	
Temperature Range	–40°C to +85°C	
Climatic Category	40/085/56/B	
Peak Pulse Voltage	375 V	
Series Resistance	The series resistance is defined at 1 kHz for RC ≥ 50 µs and at 100 kHz for RC < 50 µs	
Insulation Resistance	Minimum Values Between Terminals	
	C ≤ 0.33 µF	≥ 3,000 MΩ
	C > 0.33 µF	≥ 1,000 MΩ • µF
Power Ratings	The average losses may reach 0.5 W provided the surface temperature does not exceed +85°C. For maximum permitted power dissipation vs. temperature, see Derating Curves.	
Derating Curves	Maximum Allowable Power Dissipation vs. Ambient Temperature and Case Sizes.	

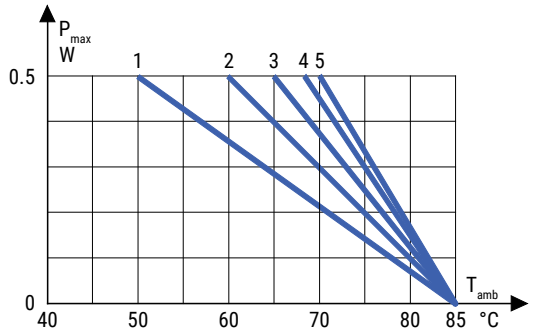

Curve	Dimension B (mm)
1	5.2
2	7.3
2	7.8
3	7.6
4	9.0
5	11.3

Environmental Test Data

Test	IEC Publication	Procedure
Vibration	IEC 60068–2–6 Test Fc	3 directions at 2 hours each 10 – 500 Hz at 0.75 mm or 98 m/s^2
Bump	IEC 60068–2–29 Test Eb	4,000 bumps at 390 m/s^2
Damp Heat Steady State	IEC 60068–2–78 Test Cab	+40°C and 93% R.H., 56 days

Environmental Compliance

All KEMET EMI capacitors are RoHS compliant.

Table 1 – Ratings & Part Number Reference

Lead Spacing (S)	Capacitance Value (µF)	Resistance (Ω)	Maximum Dimensions in mm			KEMET Part Number	Legacy Part Number
			T	H	L		
15.2	0.10	33	5.2	10.5	18.5	P405QE104M125(1)H330	PMR205AB6100M033(1)
15.2	0.10	47	5.2	10.5	18.5	P405QE104M125(1)H470	PMR205AB6100M047(1)
15.2	0.10	100	5.2	10.5	18.5	P405QE104M125(1)H101	PMR205AB6100M100(1)
15.2	0.10	220	5.2	10.5	18.5	P405QE104M125(1)H221	PMR205AB6100M220(1)
15.2	0.15	68	5.2	10.5	18.5	P405QE154M125(1)H680	PMR205AB6150M068(1)
15.2	0.15	100	5.2	10.5	18.5	P405QE154M125(1)H101	PMR205AB6150M100(1)
15.2	0.22	47	7.3	13.0	18.5	P405QM224M125(1)H470	PMR205AB6220M047(1)
15.2	0.22	100	7.3	13.0	18.5	P405QM224M125(1)H101	PMR205AB6220M100(1)
15.2	0.22	220	7.3	13.0	18.5	P405QM224M125(1)H221	PMR205AB6220M220(1)
15.2	0.22	330	7.3	13.0	18.5	P405QM224M125(1)H331	PMR205AB6220M330(1)
15.2	0.22	470	7.3	13.0	18.5	P405QM224M125(1)H471	PMR205AB6220M470(1)
15.2	0.25	200	7.3	13.0	18.5	P405QM254M125(1)H201	PMR205AB6250M200(1)
15.2	0.25	350	7.3	13.0	18.5	P405QM254M125(1)H351	PMR205AB6250M350(1)
15.2	0.25	600	7.3	13.0	18.5	P405QM254M125(1)H601	PMR205AB6250M600(1)
15.2	0.33	47	7.8	13.5	18.5	P405QP334M125(1)H470	PMR205AB6330M047(1)
20.3	0.47	22	7.6	14.0	24.0	P405CE474M125(1)H220	PMR205AC6470M022(1)
20.3	0.47	33	7.6	14.0	24.0	P405CE474M125(1)H330	PMR205AC6470M033(1)
20.3	0.47	47	7.6	14.0	24.0	P405CE474M125(1)H470	PMR205AC6470M047(1)
20.3	0.47	68	7.6	14.0	24.0	P405CE474M125(1)H680	PMR205AC6470M068(1)
20.3	0.47	100	7.6	14.0	24.0	P405CE474M125(1)H101	PMR205AC6470M100(1)
20.3	0.47	150	7.6	14.0	24.0	P405CE474M125(1)H151	PMR205AC6470M150(1)
20.3	0.47	220	7.6	14.0	24.0	P405CE474M125(1)H221	PMR205AC6470M220(1)
20.3	0.47	330	7.6	14.0	24.0	P405CE474M125(1)H331	PMR205AC6470M330(1)
20.3	0.47	470	9.0	15.0	24.0	P405CJ474M125(1)H471	PMR205AC6470M470(1)
20.3	0.47	680	11.3	16.5	24.0	P405CP474M125(1)H681	PMR205AC6470M680(1)
25.4	1.0	33	10.6	16.1	30.5	P405EE105M125(1)H330	PMR205AE7100M033(1)
20.3	1.0	47	11.3	16.5	24.0	P405CP105M125(1)H470	PMR205AC7100M047(1)
20.3	1.0	68	11.3	16.5	24.0	P405CP105M125(1)H680	PMR205AC7100M068(1)
20.3	1.0	100	11.3	16.5	24.0	P405CP105M125(1)H101	PMR205AC7100M100(1)
20.3	1.0	150	11.3	16.5	24.0	P405CP105M125(1)H151	PMR205AC7100M150(1)
20.3	1.0	220	11.3	16.5	24.0	P405CP105M125(1)H221	PMR205AC7100M220(1)
Lead Spacing (S)	**Capacitance Value (µF)**	**Resistance Ω**	**T (mm)**	**H (mm)**	**L (mm)**	**KEMET Part Number**	**Legacy Part Number**

(1) Insert lead and packaging code. See Ordering Options Table for available options.

Soldering Process

The implementation of the RoHS directive has resulted in the selection of SnAuCu (SAC) alloys or SnCu alloys as primary solder. This has increased the liquidus temperature from that of 183ºC for SnPb eutectic alloy to 217 – 221ºC for the new alloys. As a result, the heat stress to the components, even in wave soldering, has increased considerably due to higher pre-heat and wave temperatures. Polypropylene capacitors are especially sensitive to heat (the melting point of polypropylene is 160 – 170ºC). Wave soldering can be destructive, especially for mechanically small polypropylene capacitors (with lead spacing of 5 – 15 mm), and great care must be taken during soldering. The recommended solder profiles from KEMET should be used. Consult KEMET with any questions. In general, the wave soldering curve from IEC Publication 61760-1 Edition 2 serves as a solid guideline for successful soldering. See Figure 1.

Reflow soldering is not recommended for through-hole film capacitors. Exposing capacitors to a soldering profile in excess of the recommended limits may result in degradation of or permanent damage to the capacitors.

Do not place the polypropylene capacitor through an adhesive curing oven to cure resin for surface-mount components. Insert through-hole parts after curing the surface-mount parts. Consult KEMET to discuss the actual temperature profile in the oven, if through-hole components must pass through the adhesive curing process. A maximum of two soldering cycles is recommended. Allow time for the capacitor surface temperature to return to a normal temperature before the second soldering cycle.

Manual Soldering Recommendations

Following is the recommendation for manual soldering with a soldering iron.

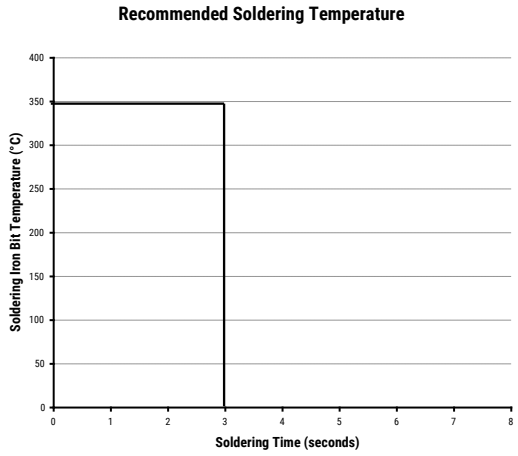

Soldering iron tip temperature should be set at 350°C (+10°C maximum), with the soldering duration not to exceed more than 3 seconds.

Wave Soldering Recommendations

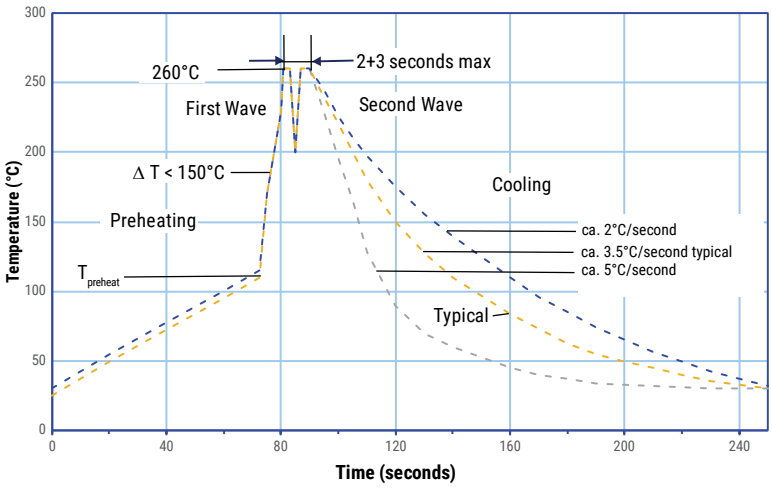

Soldering Process cont.

Wave Soldering Recommendations cont.

1. The table indicates the maximum setup temperature for the soldering process.

Dielectric Film Material	Maximum Preheat Temperature		Maximum Peak Soldering Temperature	
	Capacitor Pitch ≥ 10 mm	Capacitor Pitch > 15 mm	Capacitor Pitch ≤ 15 mm	Capacitor Pitch > 15 mm
Polyester	130°C	130°C	270°C	270°C
Polypropylene	110°C	130°C	260°C	270°C
Paper	130°C	140°C	270°C	270°C
Polyphenylene Sulphide	150°C	160°C	270°C	270°C

2. The maximum temperature measured inside the capacitor: set the temperature so that inside the element the maximum temperature is below the limit.

Dielectric Film Material	Maximum Temperature Measured Inside the Element
Polyester	160°C
Polypropylene	110°C
Paper	160°C
Polyphenylene Sulphide	160°C

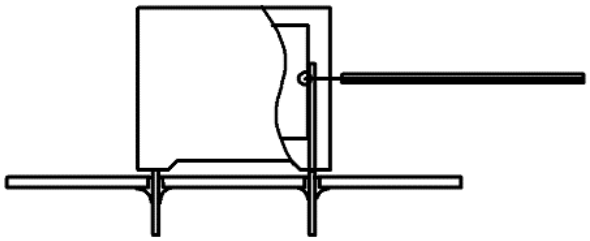

Temperature monitored inside the capacitor.

Selective Soldering Recommendations

Selective dip soldering is a variation of reflow soldering. In this method, the printed circuit board with through-hole components to be soldered is preheated and transported over the solder bath, as in normal flow soldering, without touching the solder. When the board is over the bath, it is stopped. Pre-designed solder pots are lifted from the bath with molten solder, only at the places of the selected components, and pressed against the lower surface of the board to solder the components.

The temperature profile for selective soldering is similar to the double wave flow soldering outlined in this document. **However, instead of two baths, there is only one with a time from 3 to 10 seconds.** In selective soldering, the risk of overheating is greater than in double wave flow soldering. Great care must be taken so that the parts do not overheat.

Construction

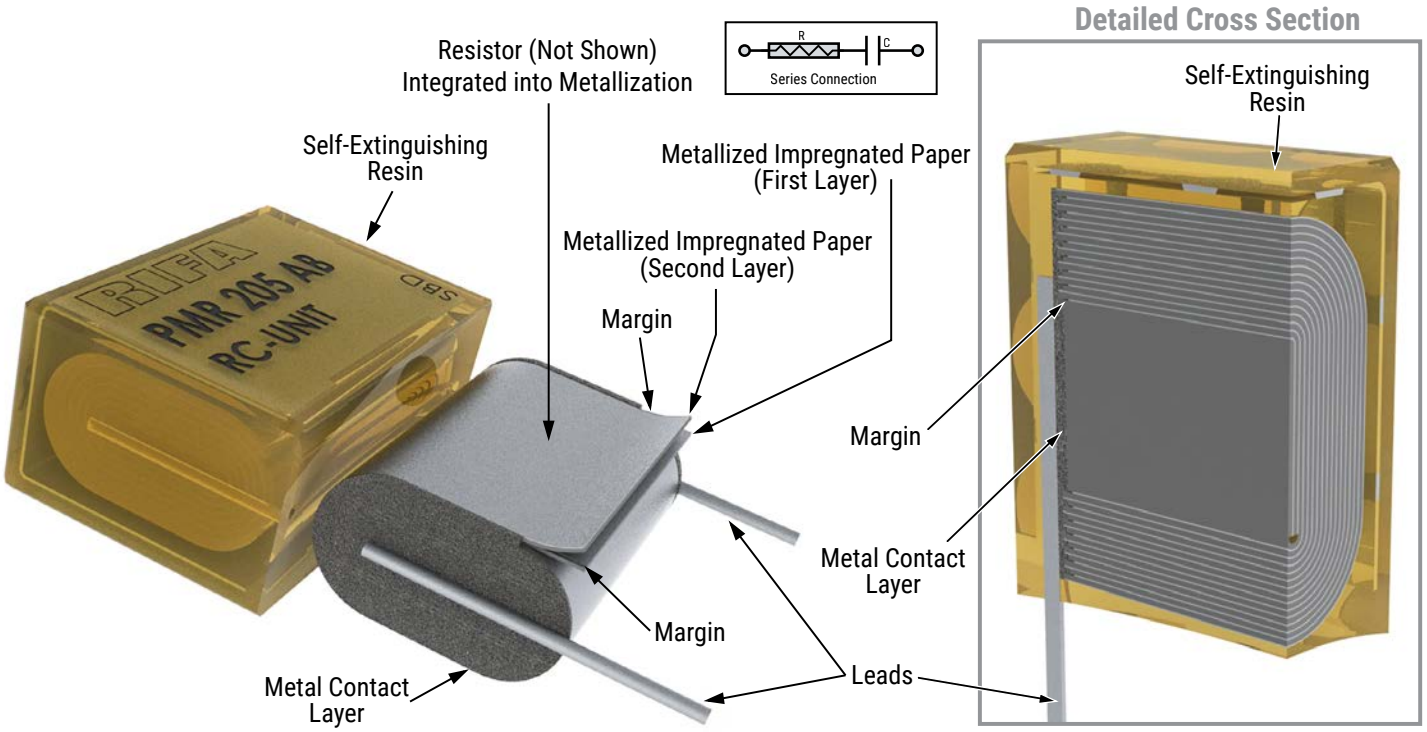

Winding Scheme

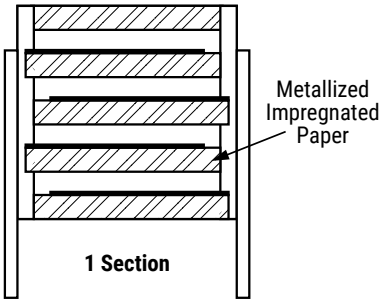

Marking

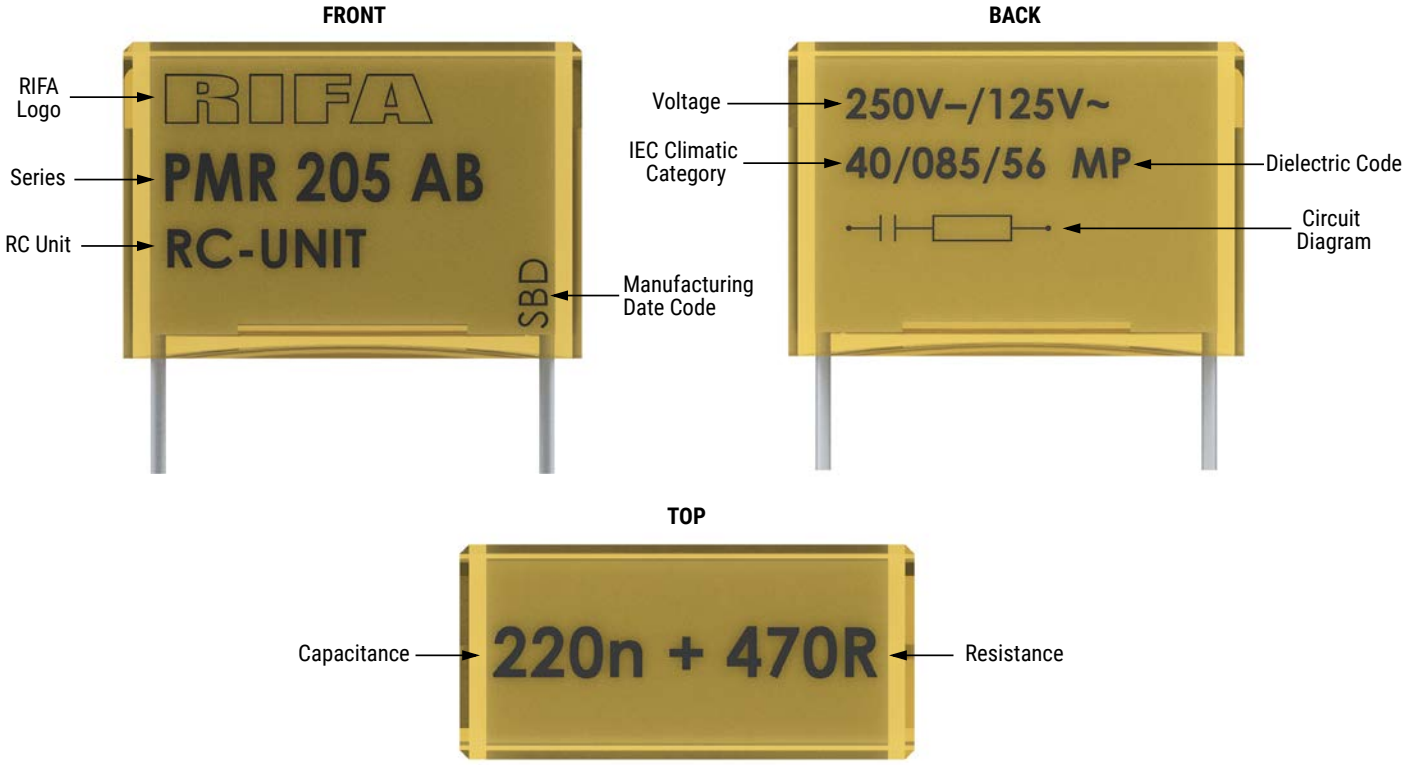

Packaging Quantities

Size Code	Lead Spacing (mm)	Thickness (mm)	Height (mm)	Length (mm)	Bulk Short Leads	Bulk Long Leads	Standard Reel 360 mm
Lead and Packaging Code					C/R06	A/R30	L/R19T0
QE	15.2	5.2	10.5	18.5	1,000	500	600
QM	15.2	7.3	13.0	18.5	600	400	400
QP	15.2	7.8	13.5	18.5	600	400	400
CE	20.3	7.6	14.0	24.0	1,530	250	250
CJ	20.3	9.0	15.0	24.0	1,530	200	250
CP	20.3	11.3	16.5	24.0	1,080	150	180
EE	25.4	10.6	16.1	30.5	1,008	150	

Lead Taping & Packaging (IEC 60286–2)

Lead Spacing 10.2 – 15.2 mm

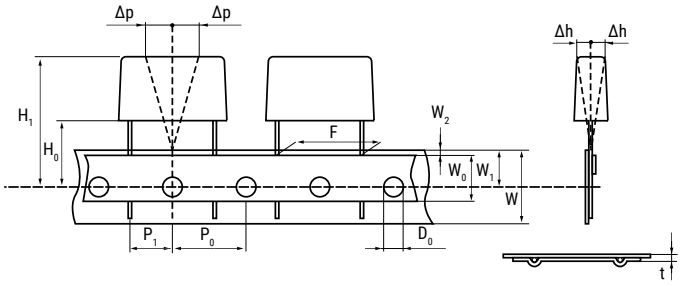

Lead Spacing 20.3 – 22.5 mm

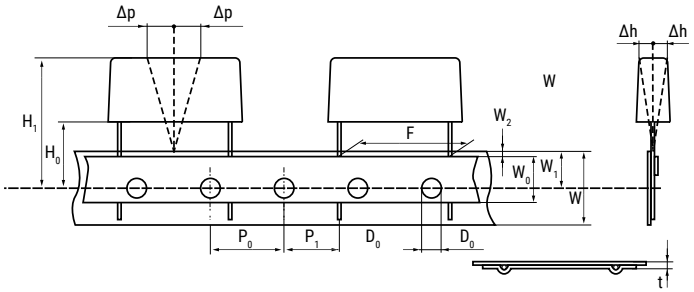

Formed Leads from 10.2 – 7.5 mm

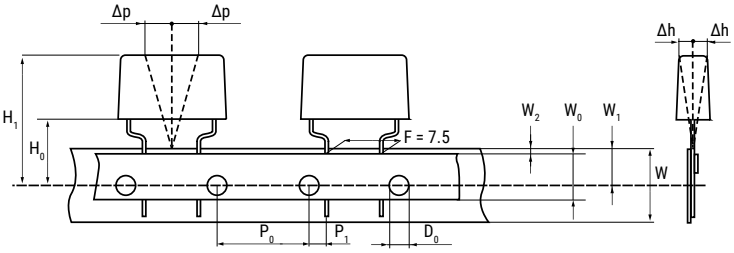

Taping Specification

Dimensions in mm								Standard IEC 60286–2
Lead Spacing	+0.6/−0.1	F	Formed 7.5	10.2	15.2	20.3	22.5	F
Carrier Tape Width	±0.5	W	18.0	18.0	18.0	18.0	18.0	18 +1/−0.5
Hold-Down Tape Width	Minimum	W_0	5.0	5.0	5.0	5.0	5.0	
Position of Sprocket Hole	±0.5	W_1	9.0	9.0	9.0	9.0	9.0	9 +0.75/−0.5
Distance Between Tapes	Maximum	W_2	3.0	3.0	3.0	3.0	3.0	3.0
Sprocket Hole Diameter	±0.2	D_0	4.0	4.0	4.0	4.0	4.0	4.0
Feed Hole Lead Spacing	±0.3	P_0 (1)	12.7(4)	12.7	12.7	12.7	12.7	12.7
Distance Lead – Feed Hole	±0.7	P_1	3.75	7.6	5.1	8.9	5.3	P[1]
Deviation Tape – Plane	Maximum	Δp	1.3	1.3	1.3	1.3	1.3	1.3
Lateral Deviation	Maximum	Δh	2.0	2.0	2.0	2.0	2.0	2.0
Total Thickness	±0.2	t	0.7	0.7	0.7	0.7	0.9 Maximum	0.9 Maximum
Sprocket Hole/Cap Body	Nominal	H_0 (2)	18 +2/−0	18 +2/−0	18 +2/−0	18 +2/−0	18.5 ±0.5	18 +2/−0
Sprocket Hole/Top of Cap Body	Maximum	H_1 (3)	43	43	43	58	58	58 Maximum

(1) Maximum cumulative feed hole error, 1 mm per 20 parts
(2) 16.5 mm available on request
(3) Depending on case size
(4) 15 mm available on request

Lead Taping & Packaging (IEC 60286–2) cont.

Ammo Specifications

Series	Dimensions (mm)		
	H	W	T
R4x, R4x+R, R7x, RSB	360	340	59
F5A, F5B, F5D			
F6xx, F8xx			
PHExxx, PMExxx, PMRxxx	330	330	50

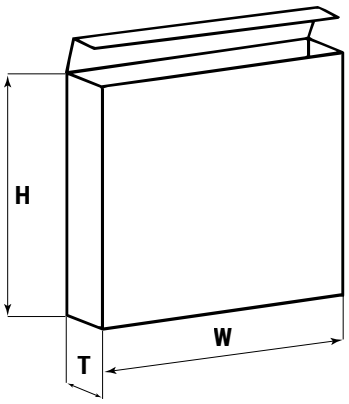

Reel Specifications

Series	Dimensions (mm)		
	D	H	W
R4x, R4x+R, R7x, RSB	355 500	30 25	55 (Max)
F5A, F5B, F5D			
F6xx, F8xx			
PHExxx, PMExxx, PMRxxx	360 500	30	46 (Max)

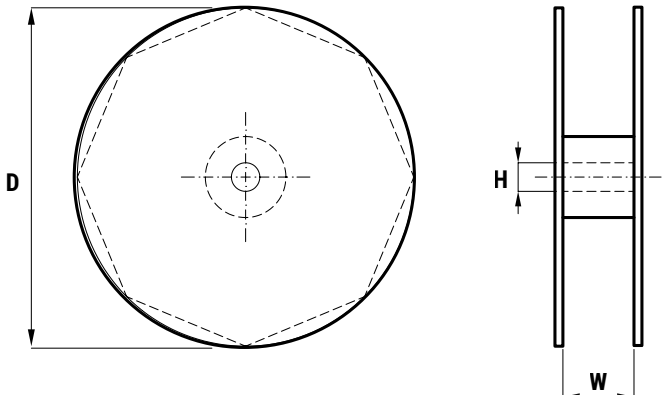

Manufacturing Date Code (IEC–60062)

Y = Year, Z = Month			
Year	Code	Month	Code
2010	A	January	1
2011	B	February	2
2012	C	March	3
2013	D	April	4
2014	E	May	5
2015	F	June	6
2016	H	July	7
2017	J	August	8
2018	K	September	9
2019	L	October	O
2020	M	November	N
2021	N	December	D
2022	P		
2023	R		
2024	S		
2025	T		
2026	U		
2027	V		
2028	W		
2029	X		
2030	A		

KEMET Electronics Corporation Sales Offices

For a complete list of our global sales offices, please visit www.kemet.com/sales.

Disclaimer

YAGEO Corporation and its affiliates do not recommend the use of commercial or automotive grade products for high reliability applications or manned space flight.

All product specifications, statements, information and data (collectively, the "Information") in this datasheet are subject to change. The customer is responsible for checking and verifying the extent to which the Information contained in this publication is applicable to an order at the time the order is placed. All Information given herein is believed to be accurate and reliable, but it is presented without guarantee, warranty, or responsibility of any kind, expressed or implied.

Statements of suitability for certain applications are based on KEMET Electronics Corporation's ("KEMET") knowledge of typical operating conditions for such applications, but are not intended to constitute – and KEMET specifically disclaims – any warranty concerning suitability for a specific customer application or use. The Information is intended for use only by customers who have the requisite experience and capability to determine the correct products for their application. Any technical advice inferred from this Information or otherwise provided by KEMET with reference to the use of KEMET's products is given gratis, and KEMET assumes no obligation or liability for the advice given or results obtained.

Although KEMET designs and manufactures its products to the most stringent quality and safety standards, given the current state of the art, isolated component failures may still occur. Accordingly, customer applications which require a high degree of reliability or safety should employ suitable designs or other safeguards (such as installation of protective circuitry or redundancies) in order to ensure that the failure of an electrical component does not result in a risk of personal injury or property damage.

Although all product–related warnings, cautions and notes must be observed, the customer should not assume that all safety measures are indicated or that other measures may not be required.

Additional information about production site flexibility can be found <here>

KEMET is a registered trademark of KEMET Electronics Corporation.