DATA SHEET

6800C Series AC Power Source/Analyzers, 375-1750 VA

An integrated AC power solution



The Complete AC Power Test Solution

Keysight Technologies AC power source/analyzers provide a complete AC test solution. As AC sources, they combine the capabilities of a power amplifier and an arbitrary waveform generator. This allows you to simulate normal waveforms and many types of distorted power waveforms. The built-in power analyzer combines the capabilities of a multimeter, oscilloscope, harmonic analyzer and power analyzer. These instruments may also be used to produce DC power, either alone or as a DC offset to an AC waveform.

- Provides a complete AC and DC power and measurement solution
- Protect valuable DUTs with extensive protection

Since your product will have to operate in the real world of unpredictable AC power, you need to design and verify its correct operation under a wide range of AC power inputs. Brownouts, dropouts, sags, and other irregularities are not unusual in many communities today. Keysight AC power source/analyzers have the features needed to easily accomplish this test goal either in an R&D environment or on the manufacturing test floor. If you plan to sell your products in a worldwide market, you will also need to test them at the line voltages and frequencies for which they will eventually operate. There is also additional testing needed to meet regulatory requirements for sale into some countries.

Keysight AC power source/analyzers offer a complete solution for AC power testing, helping you to simplify this important task. These instruments combine the features of a power amplifier and arbitrary waveform generator to give you the ability to do all of the tests that you need. There are many standard preprogrammed waveforms, or you can use the transient generation system to simulate sophisticated and repeatable AC line disturbances. DC power can also be generated, either as a DC offset or as a pure DC signal.

KEYSIGHT TECHNOLOGIES

LXI-LAN, USB and GPIB IO Connectivity

Keysight 6800C Series AC power source/analyzers comes standard with LXI-LAN, USB and GPIB IO connectivity, allows convenient setup and easy communication to PC controller and other instruments.

Powerful Built-in Measurement Capabilities

Keysight AC power source/analyzers have extensive 16-bit precision measurement capabilities which would normally require a number of complex measurement instruments, including a DMM (digital multimeter), oscillo-scope, power analyzer, and harmonic analyzer. The precision measurements include:

- rms, DC, AC + DC voltage and current
- Peak voltage and current
- Real, apparent, and reactive power
- Harmonic analysis of voltage and current waveforms providing amplitude and phase up to the 50th harmonic
- THD (total harmonic distortion)
- Triggered acquisition of digitized voltage and current

Using the measurement capabilities of a Keysight AC power source/analyzer simplifies your test setups and helps you obtain accurate data quickly.

Dual Power Analyzer Option 020

The powerful built-in power analyzer in Keysight AC power source/analyzers provides everything that you need to make AC measurements at the AC input to your DUT. For many test scenarios, this is the extent of the AC analysis required. Some test scenarios, however, require AC measurements to be made at both the AC input and the AC output of the DUT. Option 020 provides an additional power analyzer, complete with a precision current shunt, which can be connected anywhere you need it. This second analyzer can even be used for tests where the AC power source/analyzer is not providing power, thus expanding the usefulness of this instrument to many more test configurations. The additional analyzer is equivalent in specifications and capabilities to the standard analyzer.

Using the dual power analyzer option instead of an additional power analyzer instrument externally is more than just convenient. Measurements on all four measurement channels (AC source output voltage and current, and dual power analyzer voltage and current inputs) are inherently synchronized with the AC power source/analyzers output waveform. This precision would be difficult to achieve using separate measurement instruments.

Examples Dual Power Analyzer Applications

- Complete testing of uninterruptible power sources (UPS)
- Efficiency testing of DC power supplies
- Efficiency testing of AC power sources
- Efficiency testing of transformers
- Safety testing of transformers
- Line disturbance and brownout testing of DC power supplies
- Line disturbance and brownout testing of AC power sources
- Sleep mode current monitoring
- Independent power analyzer

Sleep Mode Current Monitoring

Many electronic products have power-saving or sleep modes. In this mode, the device draws only enough power to be able to recognize a “wake-up” signal, and then execute a smooth “wake-up”. The power drawn in this mode is a critical parameter, and the ability to accurately monitor it is important. The accessory precision current shunt that is supplied with option 020 is mounted in such a way to make it easy for you to replace it with a precision resistor of your choice. By doing this, you can configure the system to accurately monitor extremely low currents. This provides an easy way for you to profile the current draw in all modes of your product’s operation. Since Keysight 6800C Series AC power source/analyzers produce DC power as well as AC power, portable battery-operated products can also be tested with this configuration.

UPS (Uninterruptible Power Source) Testing

The dual power analyzer option provides many important benefits for UPS testing. Since the key to correct UPS operation is having the output react properly to changes on the input, being able to monitor the output relative to the input simplifies testing. For example, commands are available to enable calculation of UPS transfer time, and the phase difference between the UPS input and output voltage. Keysight AC power source/ analyzers also have programmable output impedance, enabling the UPS designer to verify product stability over a wide range of AC line impedance.

Test Suite for Avionics Equipment

Keysight AC power source/analyzers are well suited for testing equipment intended for use in the avionics industry which operate at nominally 400 Hz. One of the special requirements that many manufacturers in this industry must concern themselves with is testing to meet RTCA DO-160 standards, which involve both AC and DC immunity tests.

Extensive Protection to Prevent Load Damage

In addition to overcurrent, overvoltage, overpower and overtemperature protection, the 6800C Series offers output disconnect relays and remote inhibit capability (quickly disabling the output of the AC power source/analyzers via a TTL signal) to protect the device under test.

Application Information

The 6800C Series can help you test and improve your products. You can easily perform:

- Static testing–generating and measuring voltage, frequency, and line current for meeting worldwide specifications.
- Dynamic testing–generating AC line transients for limit testing and design verification.
- Specialty testing–measuring current harmonic content and creating custom AC power waveforms (such as a combined AC + DC signal to simulate a telephone ring).
- Precompliance regulatory testing—measuring current harmonics, voltage fluctuations and flicker emissions and generating voltage and frequency disturbances and interharmonics to determine product immunity.
- Development engineers and test professionals in a wide variety of industries use AC power source/analyzers. Here are a few examples:
- Avionics – Instrumentation, ATE test stations
- Computer products – Computers, monitors, peripherals
- Consumer products – Home appliances, audio and video equipment, heating/cooling controls
- Electrical products – Relays, transformers, power components, fire alarms
- Lighting products – Electronic ballasts, compact fluorescent bulbs, timers
- Motors – AC motors, electronic controllers
- Power products – AC/DC adapters, AC/DC power supplies, PBX power supplies, uninterruptible power supplies
- Telecom products – RF amplifiers, CATV devices, MUX's, routers, switches

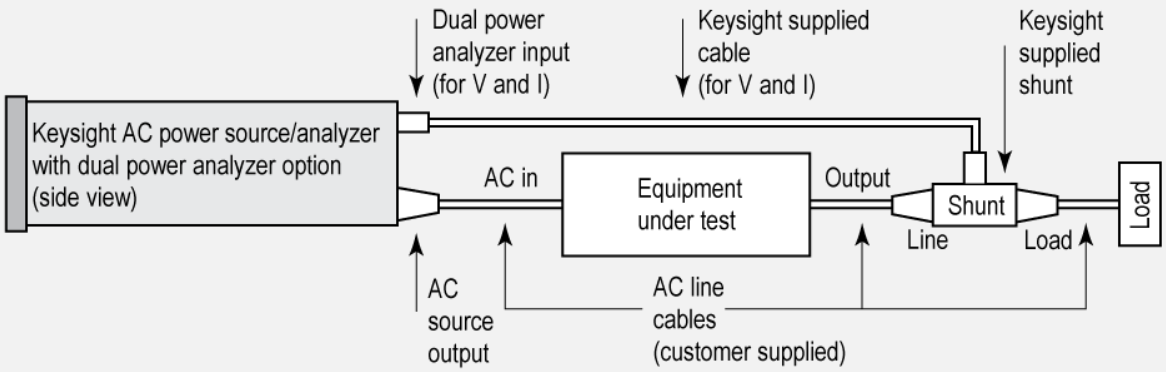

Figure 1. Test configuration of efficiency measurement using an Keysight AC source with the 020 dual power analyzer option.

Specifications

For a sine wave with a resistive load at 0 ° to 40 °C, within an output frequency range of 45 Hz to 1000 Hz, and in AC coupled mode after a 30-minute warm-up unless otherwise noted.

Specifications *(at 0 ° to 40 °C unless otherwise specified)*	**6811C**	**6812C**	**6813C**
Number of phases	1	1	1
Output ratings **(Maximum)**			
Power	375 VA	750 VA	1750 VA
rms voltage	300 V	300 V	300 V
rms current	3.25 A	6.5 A	13 A
Repetitive & non-repetitive peak current	40 A	40 A	80 A
Crest factor	12	6	6
Load power factor capability	0 to 1	0 to 1	0 to 1
DC power	285 W	575 W	1350 W
DC voltage	± 425 VA	± 425 V	± 425 V
DC current	2.5 A	5.0 A	10.0 A
Output frequency range[1]	DC; 45 Hz to 1 kHz	DC; 45 Hz to 1 kHz	DC; 45 Hz to 1 kHz
Constant voltage ripple and noise (20 kHz to 10 MHz)	–60 dB (relative to full scale)	–60 dB (relative to full scale)	–60 dB (relative to full scale)
Line regulation (% of full scale)	0.1%	0.1%	0.1%
Load regulation (% of full scale)	0.5%	0.5%	0.5%
Maximum total harmonic distortion	0.25% at 50/60 Hz 1% worst case 45 to 1 kHz	0.25% at 50/60 Hz 1% worst case 45 to 1 kHz	0.25% at 50/60 Hz 1% worst case 45 to 1 kHz
Programming accuracy (at 25 ° ± 5 °C)	**6811C**	**6812C**	**6813C**
RMS voltage (% of output + offset)	45 to 100 Hz 0.15% + 0.3 V > 100 to 500 Hz 0.5% + 0.3 V > 500 to 1000 Hz 1% + 0.3 V	45 to 100 Hz 0.15% + 0.3 V > 100 to 500 Hz 0.5% + 0.3 V > 500 to 1000 Hz 1% + 0.3 V	45 to 100 Hz 0.15% + 0.3 V > 100 to 500 Hz 0.5% + 0.3 V > 500 to 1000 Hz 1% + 0.3 V
DC voltage	0.1% + 0.5 V	0.1% + 0.5 V	0.5% + 0.3 V
Frequency	0.01% + 10 µHz	0.01% + 10 µHz	0.01% + 10 µHz

1. Product may be operated between DC and 45 Hz subject to certain deratings. Measurements may be extended to 4.5 Hz at full accuracy only by selecting a digitization rate of 250 µs per point. Frequency content of the measured signal must be limited to 4 kHz or less to avoid aliasing effects.

For a sine wave with a resistive load at 0 ° to 40 °C, within an output frequency range of 45 Hz to 1000 Hz, and in AC coupled mode after a 30-minute warm-up unless otherwise noted.

Measurement accuracy (at 25 ° ± 5 °C)	6811C	6812C	6813C
Rms. voltage (45-100 Hz)	0.03% + 100 mV[1]	0.03% + 100 mV[1]	0.03% + 100 mV[1]
DC voltage	0.05% + 150 mV[1]	0.05% + 150 mV[1]	0.05% + 150 mV[1]
RMS current (45-100 Hz)[2]			
High range	0.05% + 10 mA	0.05% + 10 mA	0.05% + 10 mA
Low range	0.05% + 1.5 mA	0.05% + 1.5 mA	0.05% + 1.5 mA
Power (VA) (45-100 Hz)[2]			
High range	0.1% + 1.5 VA + 12 mVA/V	0.1% + 1.5 VA + 12 mVA/V	0.1% + 1.5 VA + 12 mVA/V
Low range	0.1% + 1.5 VA + 1.2 mVA/V	0.1% + 1.5 VA + 1.2 mVA/V	0.1% + 1.5 VA + 1.2 mVA/V
Power (watts) (45-100 Hz)[2]			
High range	0.1% + 0.3 W + 12 mW/V	0.1% + 0.3 W + 12 mW/V	0.1% + 0.3 W + 12 mW/V
Low range	0.1% + 0.3 W + 1.2 mW/V	0.1% + 0.3 W + 1.2 mW/V	0.1% + 0.3 W + 1.2 mW/V
Frequency	0.01% + 0.01 Hz	0.01% + 0.01 Hz	0.01% + 0.01 Hz
Power factor	0.01	0.01	0.01
Current magnitude (low range)			
Fundamental	0.03% + 1.5 mA	0.03% + 1.5 mA	0.03% + 1.5 mA
Harmonics 2-49	0.03% + 1 mA + 0.2%/kHz	0.03% + 1 mA + 0.2%/kHz	0.03% + 1 mA + 0.2%/kHz
Current magnitude (high range)			
Fundamental	0.05% + 5 mA	0.05% + 5 mA	0.05% + 5 mA
Harmonics 2-49	0.05% + 3 mA + 0.2%/kHz	0.05% + 3 mA + 0.2%/kHz	0.05% + 3 mA + 0.2%/kHz
Supplemental characteristics ***(Non-warranted characteristics determined by design and useful in applying the product)***	**6811C**	**6812C**	**6813C**
Average programming accuracy (% of output + offset) rms current	1.2% + 50 mA	1.2% + 50 mA	1.2% + 50 mA
Average programming resolution			
rms voltage	125 mV	125 mV	125 mV
DC voltage	250 mV	250 mV	250 mV
Overvoltage programming (OVP)	2 V peak	2 V peak	2 V peak
rms current	2 mA	4 mA	4 mA
Peak current	12.5 mA	25 mA	25 mA
Output frequency	10 µHz	10 µHz	10 µHz
Phase	N/A	N/A	N/A

1. Product may be operated between DC and 45 Hz subject to certain deratings. Measurements may be extended to 4.5 Hz at full accuracy only by selecting a digitization rate of 250 µ seconds per point. Frequency content of the measured signal must be limited to 4 kHz or less to avoid aliasing effects.
2. Select low measurement range for improved accuracy (10:1) for lower power measurements.

For a sine wave with a resistive load at 0 ° to 40 °C, within an output frequency range of 45 Hz to 1000 Hz, and in AC coupled mode after a 30-minute warm-up unless otherwise noted.

Supplemental characteristics *(Non-warranted characteristics determined by design and useful in applying the product)*	**6811C**	**6812C**	**6813C**
Average measurement resolution			
rms voltage	10 mV	10 mV	10 mV
rms current	2 mA	2 mA	2 mA
Programmable output impedance			
Resistance	0 – 1 Ω	0 – 1 Ω	0 – 1 Ω
Inductance	20 µh – 1 mh	20 µh – 1 mh	20 µh – 1 mh
Remote sense capability	Up to 1 Vrms can be dropped across each load lead	Up to 1 Vrms can be dropped across each load lead	Up to 1 Vrms can be dropped across each load lead
Isolation to ground	300 Vrms/425 VDC	300 Vrms/425 VDC	300 Vrms/425 VDC
Net weight	29.1 kg (64.2 lb)	29.1 kg (64.2 lb)	30.1 kg (66.4 lb)
Shipping weight	33.59 kg (74.05 lb)	33.59 kg (74.05 lb)	34.59 kg (76.26 lb)
AC Input Ratings	**6811C**	**6812C**	**6813C**
Voltage range (VAC) *default factory setting	87 to 106 VAC *104 to 127 VAC 174 to 220 VAC 191 to 254 VAC	87 to 106 VAC *104 to 127 VAC 174 to 220 VAC 191 to 254 VAC	174 to 220 VAC *191 to 254 VAC
Maximum input current (rms) (Measured at low line)	12 A (100 VAC) 10 A (120 VAC) 7.5 A (200/208 VAC) 6.5 A (230 VAC)	28 A (100 VAC) 24 A (120 VAC) 15 A (200/208 VAC) 13 A (230 VAC)	22 A (200/208 VAC) 20 A (230 VAC)
Input power (max) (Measured at high line)	1000 VA/700 W	2500 VA/1400 W	3800 VA/2600 W
Input frequency	47 to 63 Hz	47 to 63 Hz	47 to 63 Hz

Supplemental characteristics for all model numbers

Size: 425.5 mm W x 132.6 mm H x 574.7 mm D (16.75 in x 5.25 in x 22.6 in)

Ordering Information

HW Option	Description	6811C	6812C	6813C
019	Raise output to 2000 VA, reduce frequency to 100 Hz	-	-	Yes
020	Dual power analyzer	Yes	Yes	Yes
026	Add auxiliary output: 26 Volt, 0.1 A, 45 to 100 Hz only	-	Yes	Yes
Input Option	**Description**	**6811C**	**6812C**	**6813C**
100	100 VAC nominal, 87 to 106 VAC, 47-63 Hz, Japan only	Yes	Yes	-
120	120 VAC nominal, 104 to 127 VAC, 47-63 Hz	Yes	Yes	-
200	200 VAC nominal, 174 to 220 VAC, 47-63 Hz, Japan only	-	-	Yes
208	208 VAC nominal, 174 to 220 VAC, 47-63 Hz	Yes	Yes	-
230	230 VAC nominal, 191 to 254 VAC, 24-63 Hz	Yes	Yes	Yes
Line Cord	**Description**	**6811C**	**6812C**	**6813C**
831	Unterminated: 12 AWG, 200 to 240 VAC	-	Yes	Yes
832	Unterminated: 4 mm2, 200 to 240 VAC	-	-	Yes
833	Unterminated: 1.5 mm2, 200 to 240 VAC	-	Yes	-
834	Unterminated: 10 AWG, 100 to 120 VAC		Yes	
841	250 V plug: NEMA L6-20P; 20 A	-	Yes	-
842	220V plug: IEC 309; 32 A	-	-	Yes
844	250 V locking plug: NEMA L6-30P; 30 A	-	-	Yes
845	220 V plug: IEC 309; 16 A	-	Yes	-
846	120 V plug: NEMA L6-30P; 30 A	-	Yes	-
847	220 V plug: CEE 7/7; 16 A	-	Yes	-
848	240 V plug: BS 546; 15 A	-	Yes	-

Note: Option 026 is mutually exclusive to option 019 and 020. Option 019 and 020 can be ordered together.

Accessories

Option	Description
1CM104A[1]	Rack mount flange kit 132.6 mm H (3U) – two flange brackets
1CP108A[1]	Rack mount flange and handle kit 132.6 mm H (3U) – two brackets and front handles
E3663AC	Support rails for Keysight rack cabinets

1. Support rails required.

www.keysight.com/find/6800C

www.keysight.com/find/6811C

www.keysight.com/find/6812C

www.keysight.com/find/6813C

Learn more at: www.keysight.com

For more information on Keysight Technologies' products, applications or services, please contact your local Keysight office. The complete list is available at: www.keysight.com/find/contactus

This information is subject to change without notice. © Keysight Technologies, 2017 - 2021, Published in USA, Janaury 18, 2021, 5992-2370EN