THIS DOCUMENT IS THE PROPERTY OF KEYSTONE ELECTRONICS CORP. AND SHALL NOT BE REPRODUCED, DISTRIBUTED OR USED AS A BASIS FOR MANUFACTURE WITHOUT PRIOR WRITTEN PERMISSION FROM KEYSTONE ELECTRONICS CORP.

MOUNTING LAYOUT

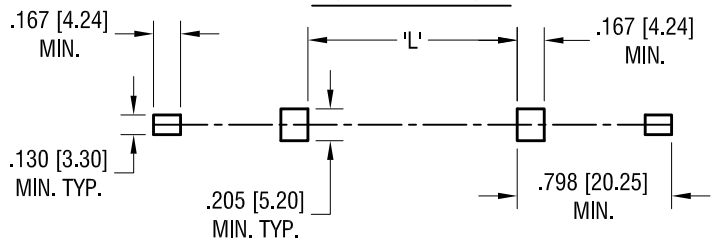

BATTERY	'L'
CR123A	.144 [3.66] MAX.
18350	.197 [5.00] MAX.
18650 *	1.58 [40.20]MAX.
17500	0.99 [25.20]MAX.

* FOR BATTERIES WITH BUILT-IN CIRCUIT PROTECTION (67mm LONG)

ACTUAL SIZE

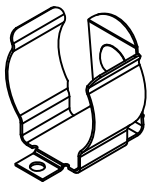

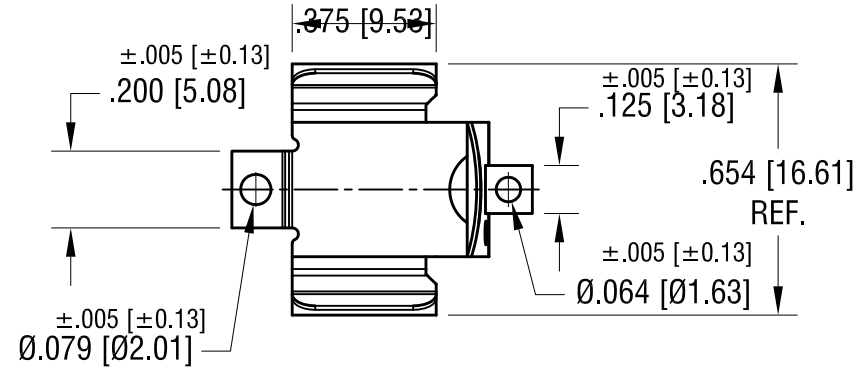

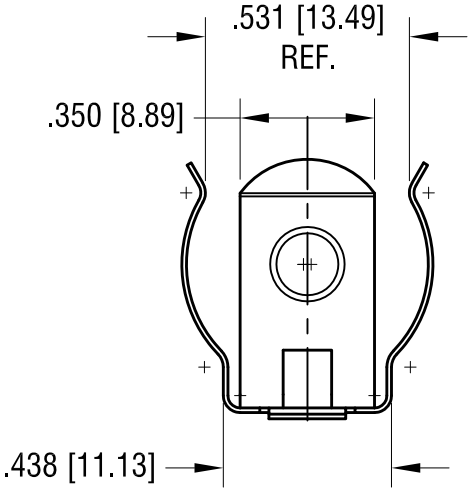

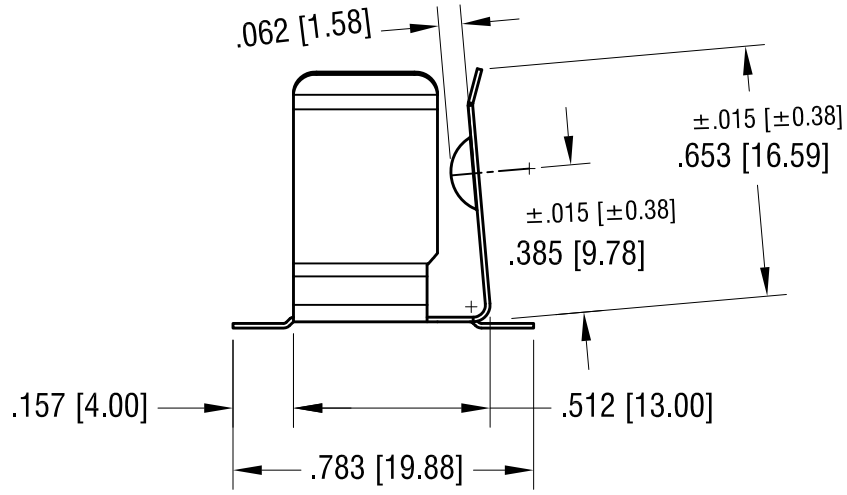

NOTE:
1. HEAT TREAT TO SPRING TEMPER

PCB PROTECTION CIRCUITS ARE REQUIRED WHEN USED WITH LITHIUM-ION BATTERIES

DATE	DESCRIPTION	REV.
9.14.23	MTG. SOLDER CONTACTS REMOVED CHANGE AS PER ECN 23–154	C
8.15.22	(B1) WAS .060, ADD RELIEF (B2) CHANGE AS PER ECN 22–141	B
6.14.21	REMOVE HOLE FOR WIRE CHANGE AS PER ECN 21–053	A

KEYSTONE ELECTRONICS CORP.
www.keyelco.com ● NEW HYDE PARK, NY 11040● Tel (516) 328-7500

PART NAME: 16mm - 19mm SM BATTERY CLIP

MATERIAL: .012 [0.30] TH'K ANNEALED SPRING STEEL

FINISH: TIN NICKEL PLATE

DRN BY: NT | DATE: 1.17.18

APP'D: RH | SCALE: 2X

TOLERANCES INCH [MM]
DECIMAL ± .010 [± 0.25]
ANGULAR ± 2°
UNLESS OTHERWISE SPECIFIED

CODE: C

DWG NO.: 254