EH-23149-000
SHT 1.1

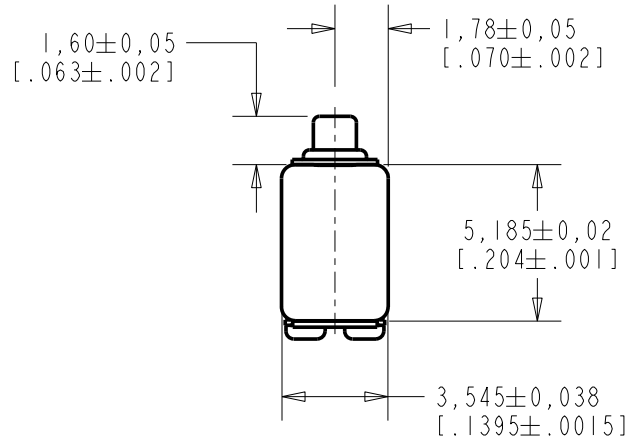

NOTES:

1. A POSITIVE GOING VOLTAGE AT TERMINAL 2, RELATIVE TO TERMINAL 1, CAUSES A DECREASE IN PRESSURE AT THE SOUND OUTLET.

2. LOCATED FROM TWO SURFACES FOR CUSTOMER CONVENIENCE. ONLY APPLICABLE FROM ONE SURFACE, NOT TO BE USED TOGETHER. HORIZONTAL LOCATION FOR TERMINAL CENTERED TO ±0,17 [.007].

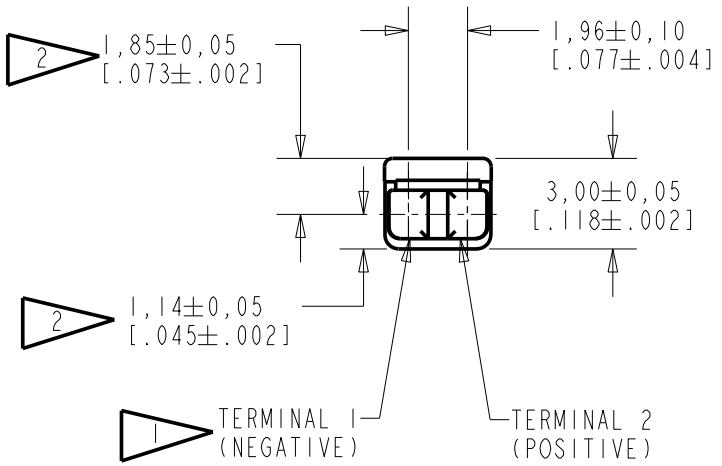

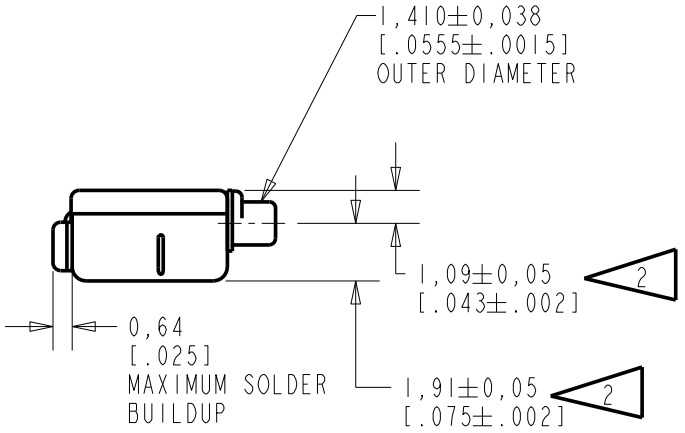

NOMINAL WEIGHT
.23 GRAMS

DIMENSIONS IN MILLIMETERS [INCHES]

Revision	C.O. #	Implementation Date	RELEASE LEVEL	REVISION
C	C10109704	5-21-09	Active	C
B	C10108596	12-24-08		
A	C10103366	11-10-05		

KNOWLES ELECTRONICS
ITASCA, ILLINOIS U.S.A.

SCALE: 4:1

DO NOT SCALE DRAWING

TITLE: RECEIVER
OUTLINE DRAWING

EH-23149-000
SHT 1.1

DR. BY	DATE
AB	11-10-05
CK. BY	DATE
GJP	11-21-05
APP. BY	DATE
GJP	11-21-05

KEIIIASIZE.FRM Rev: B

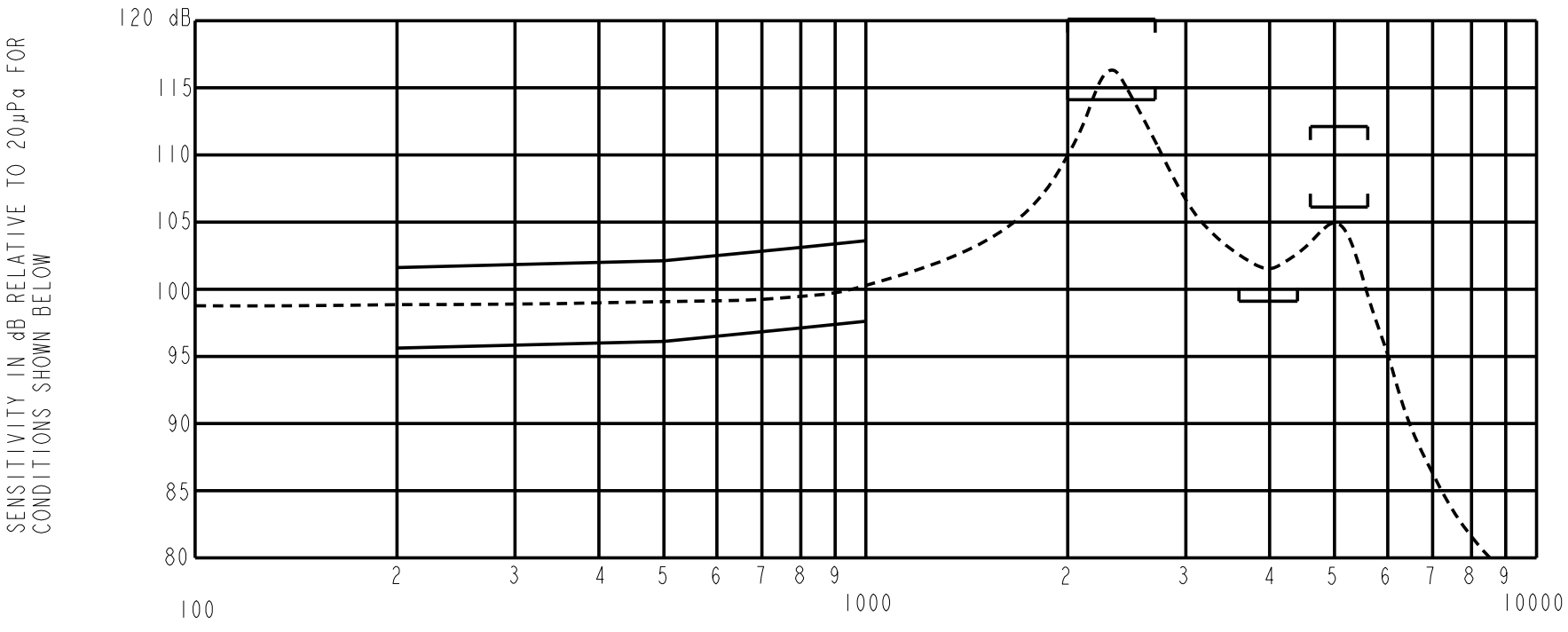

NOTES:

1. MEASUREMENTS MADE USING 10mm (.394") OF 1mm (.039") ID TUBE CONNECTED TO A SIMULATED ANSI S3.3-1960 TYPE HA-3 COUPLER. (T3479 AND B & K DB0138)

2.

FREQUENCY	SENSITIVITY MIN.	MAX.
200	95.5	101.5
500	96.0	102.0
800	96.5	102.5
1000	97.0	103.0
2250-2950	113.5	119.5
3600-4400	101.0	---
4500-5500	106.0	112.0

3. RESPONSE, IMPEDANCE, AND DISTORTION MEASUREMENTS MADE USING THE ELECTRICAL TEST CONDITIONS SHOWN BELOW.

4. ELECTRICAL SOURCE IMPEDANCE MUST BE GREATER THAN 20 TIMES 1KHz IMPEDANCE FOR TEST CONDITIONS SHOWN BELOW.

5. INDIVIDUAL SPECIFICATIONS.

PORT LOCATION	IMPEDANCE OHMS ±15%		DCR @20°C OHMS ±10%	DISTORTION		ELECTRICAL TEST CONDITIONS	
	1KHz	500Hz		MAX. %	FREQ Hz	AC mA RMS	DC mA
12C	165	101	68	10	800	1.63	0.00

Revision	C.O. #	Implementation Date	RELEASE LEVEL	REVISION
C	C10109704	5-21-09	Active	C
B	C10108596	12-24-08		
A	C10103366	11-10-05		

KNOWLES ELECTRONICS
ITASCA, ILLINOIS U.S.A.

WHEN TEST LIMITS ARE USED TO ESTABLISH INCOMING INSPECTION ACCEPTANCE/REJECTION CRITERIA, CORRELATION OF TEST EQUIPMENT WITH KNOWLES IS ALSO REQUIRED FOR ELIMINATION OF EQUIPMENT AND TEST METHOD VARIATION

DR. BY	DATE
AB	11-10-05
CK. BY	DATE
GJP	11-21-05
APP. BY	DATE
GJP	11-21-05

TITLE: RECEIVER
PERFORMANCE SPECIFICATION

EH-23149-000
SHT 2.1