ED-23162-000
SHT 1.1

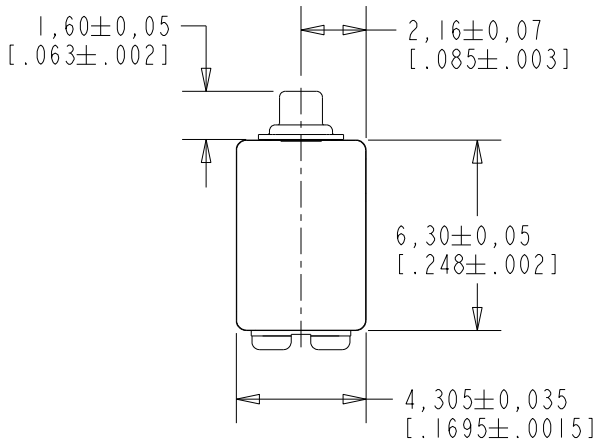

NOTE:

1. A POSITIVE GOING VOLTAGE AT TERMINAL 2, RELATIVE TO TERMINAL 1, CAUSES A DECREASE IN PRESSURE AT THE SOUND OUTLET.

2. LOCATED FROM TWO SURFACES FOR CUSTOMER CONVENIENCE. ONLY APPLICABLE FROM ONE SURFACE, NOT TO BE USED TOGETHER. HORIZONTAL LOCATION FOR TERMINAL CENTERED TO ±0,17 [.007].

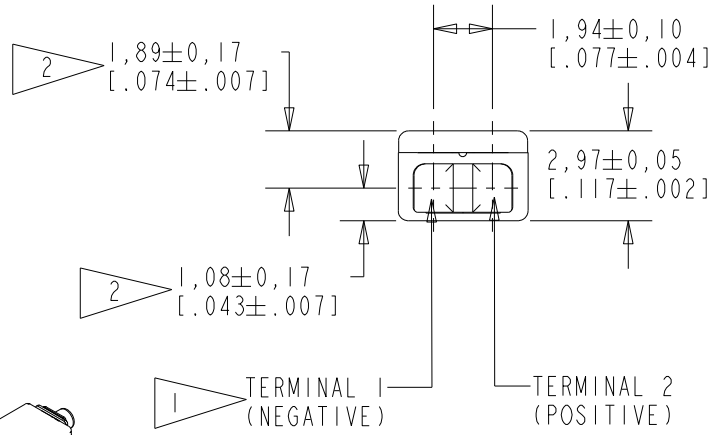

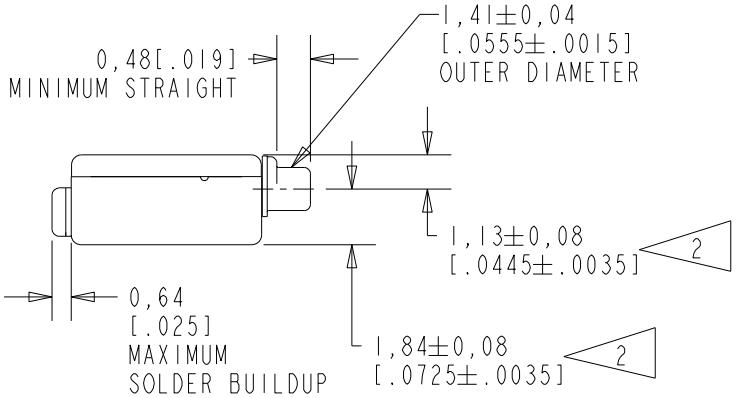

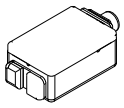

SCALE 2:1

NOMINAL WEIGHT
.31 GRAM

DIMENSIONS IN MILLIMETERS [INCHES]

Revision	C.O. #	Implementation Date	RELEASE LEVEL	REVISION
C	P10000647	6-30-16	Active	C
B	C10107990	8-20-08		
A	C10103522	12-27-05		

KNOWLES CORPORATION

SCALE: 4:1

DO NOT SCALE DRAWING

TITLE: RECEIVER
OUTLINE DRAWING

ED-23162-000
SHT 1.1

DR. BY	DATE
SDZ	9-01-06
CK. BY	DATE
GJP	9-01-06
APP. BY	DATE
GJP	9-01-06

KE111ASIZE.FRM Rev: B

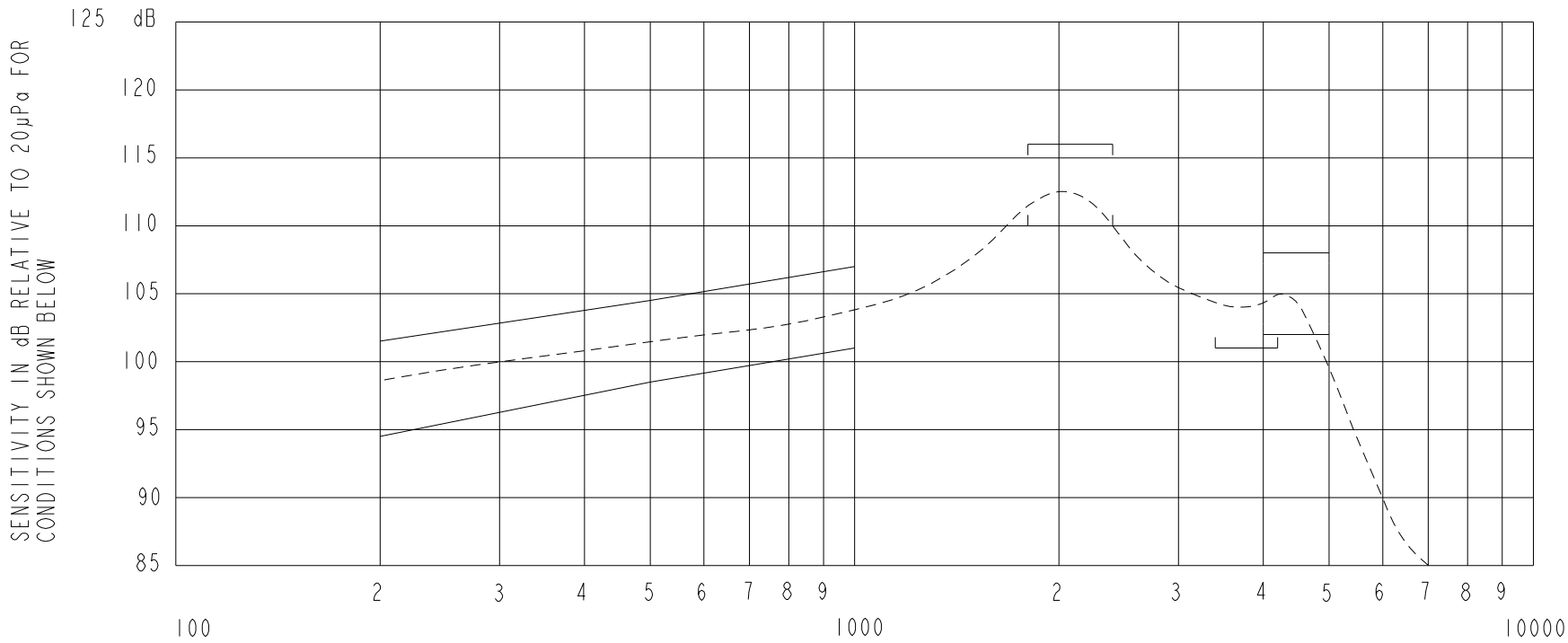

NOTES:

1. MEASUREMENTS MADE USING 10mm (.394") X 1mm (.039") ID TUBE CONNECTED TO A SIMULATED ANSI S3.7 TYPE HA-3 COUPLER. (IEC 60318-5).

2. SENSITIVITY

FREQUENCY	MIN.	MAX.
200	94.5	101.5
500	98.5	104.5
1000	101.0	107.0
1800-2400	110.0	116.0
3400-4200	101.0	---
4000-5000	102.0	108.0

3. RESPONSE, IMPEDANCE, AND DISTORTION MEASUREMENTS MADE USING THE ELECTRICAL TEST CONDITIONS SHOWN BELOW.

4. ELECTRICAL SOURCE IMPEDANCE MUST BE GREATER THAN 20 TIMES 1KHz IMPEDANCE FOR TEST CONDITIONS SHOWN BELOW.

5. INDIVIDUAL SPECIFICATIONS.

PORT LOCATION	IMPEDANCE OHMS ±15%		DCR @20°C OHMS ±10%	DISTORTION		ELECTRICAL TEST CONDITIONS	
	1KHz	500Hz		MAX. %	FREQ Hz	AC mA RMS	DC mA
12C	92.0	51.0	25.0	5	800	2.00	0.00

Revision	C.O. #	Implementation Date	RELEASE LEVEL	REVISION
C	P10000647	6-30-16	Active	C
B	C10107990	8-20-08		
A	C10103522	12-27-05		

KNOWLES CORPORATION

WHEN TEST LIMITS ARE USED TO ESTABLISH INCOMING INSPECTION ACCEPTANCE/REJECTION CRITERIA, CORRELATION OF TEST EQUIPMENT WITH KNOWLES IS ALSO REQUIRED FOR ELIMINATION OF EQUIPMENT AND TEST METHOD VARIATION

TITLE: RECEIVER PERFORMANCE SPECIFICATION

ED-23162-000 SHT 2.1

DR. BY	DATE
SDZ	9-01-06
CK. BY	DATE
GJP	9-01-06
APP. BY	DATE
GJP	9-01-06