FFC-26863-105
SHT 1.1

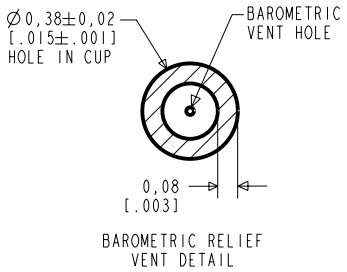

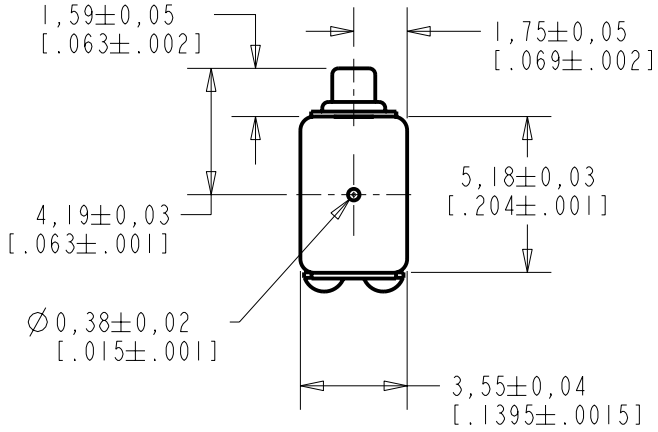

NOTES:

1. A POSITIVE GOING VOLTAGE AT TERMINAL 2, RELATIVE TO TERMINAL 1, CAUSES A DECREASE IN PRESSURE AT THE SOUND OUTLET.
2. LOCATED FROM TWO SURFACES FOR CUSTOMER CONVENIENCE. ONLY APPLICABLE FROM ONE SURFACE, NOT TO BE USED TOGETHER.

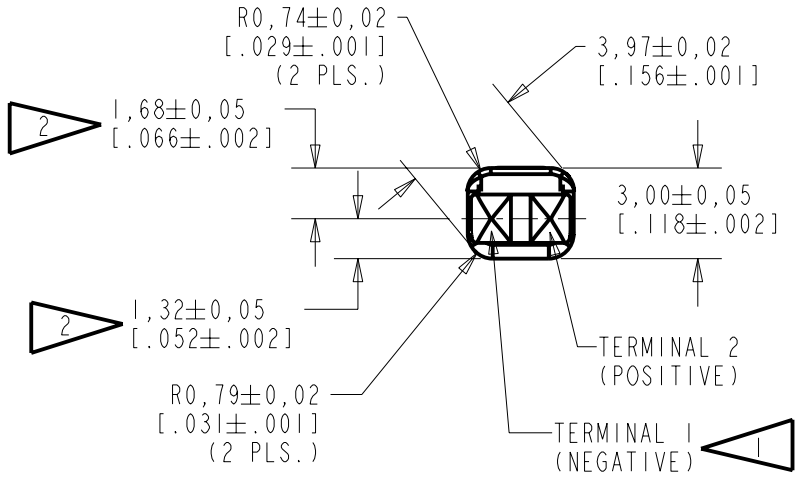

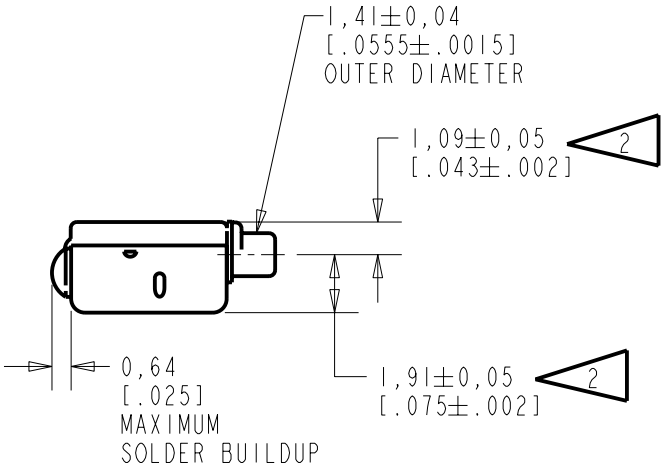



SCALE 2:1

NOMINAL WEIGHT
.23 GRAMS

DIMENSIONS IN MILLIMETERS [INCHES]

Revision	C.O. #	Implementation Date	RELEASE LEVEL	REVISION
			Released	D
D	C10105532	3-30-07		

KNOWLES ELECTRONICS
ITASCA, ILLINOIS U.S.A.

SCALE: 4:1

DO NOT SCALE DRAWING

TITLE: RECEIVER
OUTLINE DRAWING

FFC-26863-105
SHT 1.1

DR. BY	DATE
AB	1-12-06
CK. BY	DATE
GJP	1-16-06
APP. BY	DATE
GJP	1-16-06

THE FFC-26863-105 IS A FERROFLUID DAMPED AND EXTERNALLY VENTED FC-26170-000 RECEIVER WITH A PEAK OF 5dB RELATIVE TO THE SENSITIVITY AT 1kHz UNDER CONSTANT VOLTAGE DRIVE CONDITIONS.

FERROFLUID AND TYPE III DAMPING

FFC-26863-105
SHEET 2.1

CONSTANT VOLTAGE DRIVE CONDITIONS

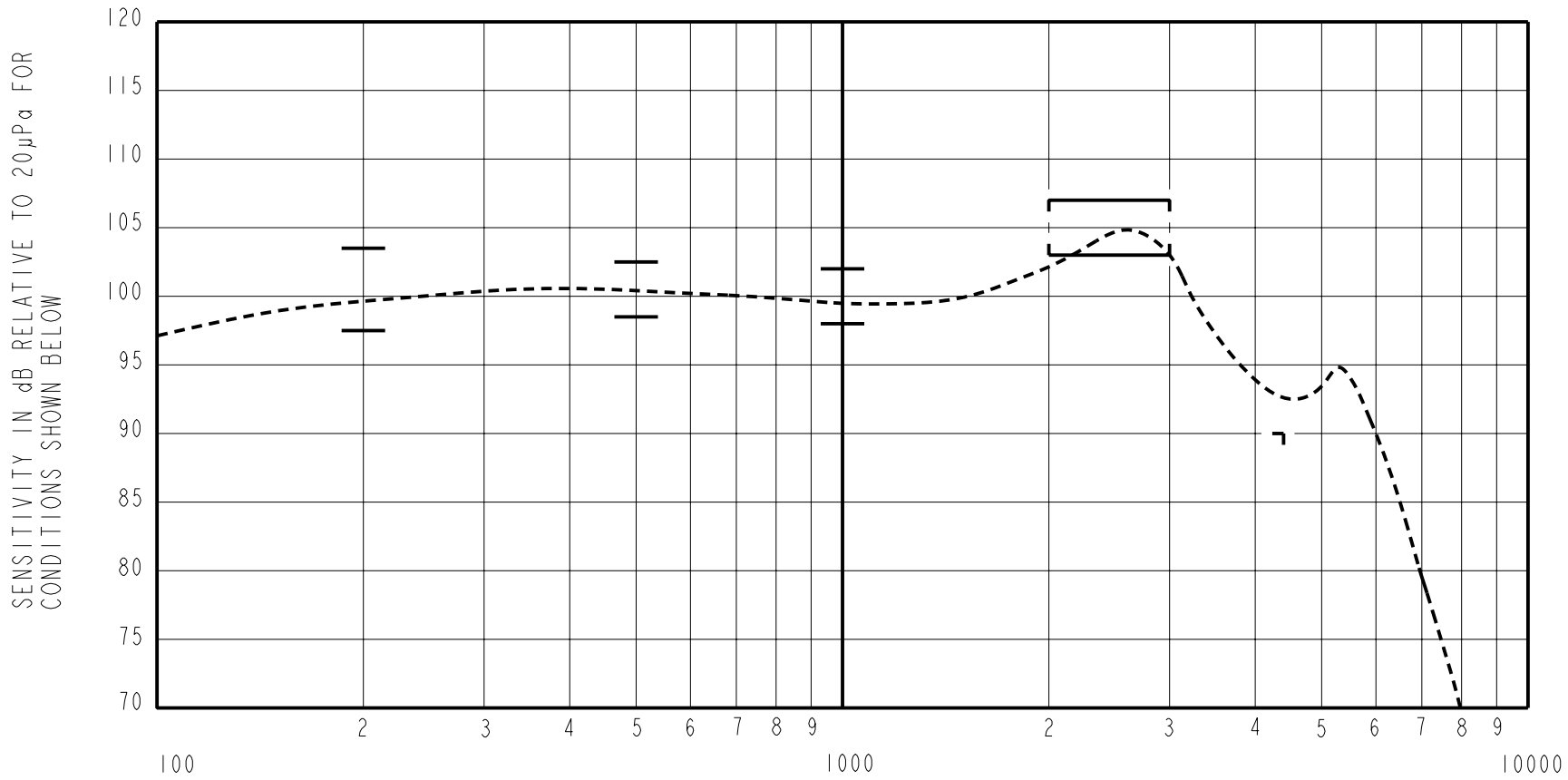

ACOUSTICAL

SENSITIVITY
DEVICE WILL PRODUCE THE SPL LISTED BELOW UNDER TEST CONDITIONS DESCRIBED IN TABLE 3.
NOMINAL SENSITIVITY AT 1kHz IS dB RELATIVE TO 20µPa. ALL OTHER VALUES IN dB RELATIVE TO THE SENSITIVITY AT 1kHz.

FREQUENCY (Hz)	*MINIMUM*	*NOMINAL*	*MAXIMUM*
200	-2.5	+0.5	+3.5
500	-1.5	+0.5	+2.5
1000	-2.0	100.0	+2.0
2100 - 3100	+3.0	+5.0	+7.0
4400	-10.0	---	---

TABLE 1

PORT LOCATION: 12C

TOTAL HARMONIC DISTORTION
DEVICE WILL NOT EXCEED TOTAL HARMONIC DISTORTION LEVELS LISTED BELOW.

FREQUENCY (Hz)	*AC DRIVE (V rms)*	*DC BIAS (V)*	*LIMIT (%)*
500	0.98	0	10
870	0.49	0	5
1300	0.49	0	5

TABLE 2

TEST CONDITIONS

NOMINAL SOURCE VOLTAGE	0.49 V rms, 0 mA DC BIAS
SOURCE IMPEDANCE	<1 Ohm
TUBING	10mm [.394"] LONG, 1mm [.039"] I.D.
COUPLER CAVITY	2 CM^3, SIMULATED ANSI S3.7 TYPE HA-3 (IEC 126)

TABLE 3

ELECTRICAL

DC RESISTANCE	540 Ohms ± 10%
IMPEDANCE @ 500 Hz	640 Ohms ± 15%
IMPEDANCE @ 1kHz	845 Ohms ±15%

TABLE 4

ISOLATION: CASE WILL BE ELECTRICALLY ISOLATED FROM THE COIL CIRCUIT.
BAROMETRIC RELIEF: THE AIR FLOW THROUGH THE BAROMETRIC RELIEF VENT TO BE 1.0 TO 2.5 cc/MIN WHEN AIR PRESSURE OF 15 INCHES WATER (3736 Pa) IS APPLIED TO AT THE PORT APERTURE.

TEMPERATURE: OPERATING RANGE FROM 0°C TO 63°C (SENSITVITY WILL NOT VARY BY MORE THAN ±3 dB WITHIN RANGE)
SENSITIVITY AT 0°C IS 2dB LOWER THAN THE SENSITIVITY AT ROOM TEMPERATURE.
STORAGE RANGE FROM -40°C TO 63°C

Revision	C.O. #	Implementation Date	RELEASE LEVEL	REVISION
			Released	D
D	C10105532	3-30-07		

KNOWLES ELECTRONICS
ITASCA, ILLINOIS U.S.A.

WHEN TEST LIMITS ARE USED TO ESTABLISH INCOMING INSPECTION ACCEPTANCE/REJECTION CRITERIA, CORRELATION OF TEST EQUIPMENT WITH KNOWLES IS ALSO REQUIRED FOR ELIMINATION OF EQUIPMENT AND TEST METHOD VARIATION

DR. BY	DATE
AB	1-12-06
CK. BY	DATE
GJP	1-16-06
APP. BY	DATE
GJP	1-16-06

TITLE: RECEIVER
PERFORMANCE SPECIFICATION

FFC-26863-105
SHT 2.1